TERASAKI
Innovators in Protection Technology

TemBreak PRO

New release

IoT with SMART MCCB

TERASAKI ELECTRIC CO., LTD.
www.terasaki.co.jp
Catalogue No. '23-I68E

Revised points

- Revised the contents of “Product Warranty”.
- Added the list of breakers for marine use and rated breaking capacities to Chapter 2 21.
- Added the selection of breakers for protection of motor branch circuits approved by ship classification societies to Chapter 3 8.
- Added the combination of breakers for cascade breaking approved by NK, LR, AB to Chapter 3 19.
- The following models have been discontinued.

  1) Molded Case Circuit Breaker for motor protection
     XM30PB, PS125-NM

  2) TB series for distribution boards and control boards
     TB-5S (4poles), TB-5P (Single pole), TB-10S

  3) Economical series of Earth Leakage Circuit Breakers
     TZD32-EA

- Deleted the Plug-in for distribution boards (PMC).

TABLE OF CONTENTS

1. General 1-1

- Features 1-2
- Series configuration/appearance 1-8
- Selection Chart 1-10

2. Ratings and Specifications 2-1

Moulded Case Circuit Breakers

1 Economical series 2-2
2 Standard series 2-3
3 High-fault level series 2-9
4 Current limiting standard series 2-13
5 Current limiting High-fault level series 2-15
6 Moulded Case Circuit Breakers for motor protection 2-16
7 Switch-disconnectors 2-17
8 Non-automatic trip breakers 2-20
9 Circuit Breaker with earth leakage alarm 2-21
10 Circuit Breaker with earth leakage alarm for distribution boards and control boards 2-25
11 Single phase 3-wire circuit breaker with neutral phase open protection and earth leakage alarm 2-26
12 Single phase 3-wire circuit breaker with neutral phase open protection 2-28
13 TB series for distribution boards and control boards 2-30

Earth Leakage Circuit Breakers

14 Economical series 2-31
15 Standard series 2-32
16 High-fault level series 2-34
17 Earth Leakage Circuit Breakers for motor protection 2-35
18 Single phase 3-wire earth leakage circuit breaker with neutral phase open protection 2-36
19 Earth Leakage Circuit Breakers for distribution boards and control boards 2-38

Earth Leakage Relays

20 TZS series 2-39
21 List of breakers for marine use and rated breaking capacities (approved by ship classification societies) 2-40
22 List of breakers for CCC approved and rated breaking capacities 2-52

3. Selection 3-1

1 Characteristics and Performance 3-2
2 Current-carrying capacity depending on ambient temperature and cable size 3-3
3 Application of circuit breakers and earth leakage circuit breakers based on transformer capacity 3-4
4 Application of circuit breakers based on breaking capacity 3-6
5 Application of earth leakage circuit breakers based on breaking capacity 3-7
6 Selection of earth leakage circuit breakers for the purpose of protection 3-8
7 Selection of circuit breakers and earth leakage circuit breakers for motor circuit main lines 3-9
8 Selection of breakers for protection of motor branch circuits 3-10
9 Selection of earth leakage circuit breakers for motor branch circuits 3-14
10 Selection of circuit breakers for lamps and electric heating circuits 3-16
11 Selection of earth leakage circuit breakers for lamps and electric heating circuits 3-17
12 Selection of motor protection breakers (for direct start) 3-18
13 Selection of earth leakage circuit breakers for motor protection (for direct start) 3-19
14 Selection of circuit breakers for transformer primary side 3-20
15 Selection of circuit breakers for resistance welding machine circuits 3-21
16 Selection of circuit breakers for capacitor circuits 3-21
17 Selection of circuit breakers for inverter circuits 3-21
18 Selection of circuit breakers and earth leakage circuit breakers for selectivity coordination 3-22
19 Combination of breakers for cascade breaking 3-24
20 Selection of rated operational voltage and number of poles 3-29
21 Selection of single phase 3-wire circuit breakers with neutral phase open protection 3-30
22 Application of single phase 3-wire circuit breakers/earth leakage circuit breakers with neutral phase open protection to parallel circuits 3-31
23 Selection of single phase 3-wire earth leakage circuit breakers with neutral phase open protection for photovoltaic power generation systems 3-32

4. Special Breakers 4-1

1 Instantaneous trip only breakers 4-2
2 Special instantaneous trip breakers 4-4
3 Circuit Breaker For DC Special Voltage 4-6
4 DC specification product instantaneous trip set current value 4-7
5 Type 2 Heat Resistant Circuit Breaker for Emergency Power Supplies 4-8
6 Thermal Adjustable Circuit Breaker for Overseas Plants 4-9
7 690 V AC Circuit Breaker 4-10
8 Special Mounting Dimensions 400 A Frame Circuit Breaker 4-12
9 High-Performance Electronic Smart Circuit Breaker (TPOU type OCR) 4-14
10 High-Performance Electronic Circuit Breaker (XOW type OCR) 4-23
11 Circuit Breaker for Special Environments 4-29

5. Mounting and Connection 5-1

1 Type of connections and mountings 5-2
List of connecting type 5-2
Connecting parts 5-6
Plug-in for switchboards (Plug-in) (PM) 5-10
2 Compression terminals 5-12
3 Terminal screw sizes and standard torques 5-14
4 Insulation distance from the line side 5-18
5 Lists of breaker mounting screws 5-20
6 Effect of mounting angle 5-21
7 Close fitting mounting 5-22
8 Reverse connection 5-23

6. Accessories 6-1

1 OCR for electronic breakers 6-2
1. TPOT type, TPOP type electronic OCR 6-2
2. XOU type electronic OCR 6-6
3. XOS type electronic OCR 6-10
2 Internally mounted accessories 6-14
1. Overview 6-14
2. Connection diagrams and terminal numbers 6-15
3. Possible combinations 6-16
4. Ratings and operation data of auxiliary and alarm switches 6-22
5. Shunt trip device (SH) 6-23
6. Undervoltage trip device (UV) 6-24
7. Shunt Trip for Circuit Breaker with Earth Leakage Alarm (SH) 6-27
8. Circuit Breaker with Earth Leakage Alarm Option 6-27
9. Remote reset voltage at both ends and current at closed path 6-28
10. Test lead voltage at both ends and current at closed path 6-28
3 Externally mounted accessories 6-29
1. Overview 6-29
2. Toggle extension 6-30
3. Motor operators (MC) 6-31
4. External operating handles 6-36
Breaker-mounted (HB) 6-36
Door-mounted (HP) 6-51
5. Mechanical interlock 6-63
Slide interlock (MS) 6-63
Rear-connected interlock (MB) 6-90
Link interlock (ML) 6-91
Wire interlock (MW) 6-102
6. Toggle holder (HH) and toggle lock (HL) 6-117
7. Terminal covers CF/CR/CS 6-119
8. Interpole barriers (BA) 6-124
9. Terminal blocks (TF) 6-125
10. Flush-mounted (flush plate) auxiliary circuit terminal block (TB) 6-137
11. Plug-in auxiliary circuit terminal block 6-147
12. DIN rail adapter 6-152
13. Door Flange (DF) 6-153

7. Characteristics and Outline Dimensions 7-1

Moulded Case Circuit Breakers 7-4
Moulded Case Circuit Breakers for motor protection 7-88
Switch-disconnectors 7-94
Non-automatic trip breakers 7-116
Circuit Breaker with earth leakage alarm 7-120
Circuit Breaker with earth leakage alarm for distribution boards and control boards 7-140
Single phase 3-wire circuit breakers with neutral phase open protection and earth leakage alarm 7-144
Single phase 3-wire circuit breakers with neutral phase open protection 7-150
Circuit Breaker for distribution boards 7-162
Earth Leakage Circuit Breakers 7-174
Earth Leakage Circuit Breakers for motor protection 7-198
Single phase 3-wire earth leakage circuit breakers with neutral phase open protection 7-206
Earth Leakage Circuit Breaker for distribution boards and control boards 7-214
Special Breakers 7-220
Earth Leakage Relays 7-243
Circuit Breaker with motor operators 7-244

8. Handling and maintenance 8-1

1 Transportation and storage 8-2
2 Environmental operating conditions 8-2
3 Installation and connection 8-2
4 Maintenance and inspection 8-4

9. Appendix 9-1

1 Trip button, earth leakage indicator, test button, selector switch mounting position 9-2
2 Handle operation and dimensions 9-5
3 Maintenance and Inspection Checker 9-6
4 Internal resistance and power consumptions 9-7
5 Calculation and Reference Graphs of the Short Circuit Current 9-10
6 Order Form 9-19

10. *TemPlug* 10-1

Now our PRO series is launched.

Ultratech for enhanced safety and usability.
New product recommendation from TERASAKI

User Friendly

Hi-Performance with Hi-Technology

Safety

It's the TemBreak PRO

Product warranty

Please confirm the following product warranty before purchasing and using the product.

1. Warranty period and warranty coverage

If any failure found to be the responsibility of Teasaki Electric occurs during use of the product within the warranty period, the product shall be repaired at no cost via the sales representative or Terasaki Electric sales office. However, if repairs are required on-site at domestic or overseas locations, expenses to send an engineer will be charged.

[Warranty period]
The warranty period of the product shall be for 12 months after the date of purchase of delivery to the designated place. However, the maximum free warranty period is 18 months from the date of manufacture, with a maximum distribution period of 6 months after shipment.
The free-of-charge warranty period of the repaired product will not be extended beyond the free-of-charge warranty period before the repair.

[Warranty coverage]
1) The primary failure diagnosis should be performed by users. However, if required by users, Terasaki Electric or Terasaki Electric Sales office may be able to perform the diagnosis for a fee.
2) The coverage shall be limited to ordinary use within the usage state, usage methods, usage environment, and other conditions which follow the instructions and precautions given in the instruction manual, user's manual, and caution labels on the product.
3) Even within the warranty period, repair cost shall be charged for the following cases.
① Failure occurring from inappropriate storage or handling, carelessness or negligence by the user. Failure caused by selection of hardware or software design on the user side.
② Failure caused by modifications, etc. to the product by the user without any approvals from Terasaki Electric.
③ In case Terasaki Electric product is assembled into a user's device, failure that could have been avoided if functions or structures, judged as necessary in the legal safety measures the user's device is subject to or as necessary by industry standards, had been provided.
④ Failure that could have been avoided if the maintenance described in the user's manual has been performed.
⑤ Failure caused by external irresistible forces such as fires or abnormal voltages, and failure caused by natural disasters such as earthquakes, lightning, wind and water damages.
⑥ Failure caused by reasons unpredictable based on scientific technology standards at the time of shipment from Terasaki Electric.
⑦ Any other failure found not to be the responsibility of Terasaki Electric or that admitted not to be so by the user.
＊In addition, the warranty applies only to the product delivered. It does not apply to the any damage that is caused by the failure of the product.

2. Exclusion of loss in opportunity and secondary loss from warranty liability

Regardless of the warranty period, Terasaki Electric shall not be liable for compensation to:
1) Damages caused by any cause found not to be the responsibility of Terasaki Electric.
2) Loss in opportunity, lost profits incurred to the user by failures of Terasaki Electric product.
3) Damages whether foreseeable or not, secondary damages, compensation for accidents, and compensation for damages to products other than Terasaki Electric products, caused by exceptional situations.
4) Compensation for cost occurring secondarily from replacement work by the user, maintenance of on-site equipment and start-up test run and other operations.

3. Product applications

1) When using the products listed in this catalogue, the following conditions must be confirmed and obeyed. The product must be used so that a failure that occurs to the product does not lead to a serious accident. When a damage or failure occurs, the external backup function or fail-safe function must be executed systematically.
2) The products listed in this catalogue are designed and manufactured as general-purpose products for application to the general industry field. When considering the use of our products for special applications such as the following equipment and systems, please contact Terasaki Electric sales office to confirm the specifications.

① The use that has a significant influence on the public facilities such as nuclear power plants and other power plants of power companies.
② The use for railway companies, government offices, etc. that require to build the special quality assurance system.
③ The use for aerospace equipment, medical equipment, railway equipment, combustion and fuel equipment, passenger vehicles, manned transportation equipment, recreational equipment, safety equipment, and air conditioner for servers and the cooling facilities that are expected to have a significant influence on life, body, and property.

4. Safety notice

Be sure to read these Instructions and other associated documents accompanying the product thoroughly to be familiarize yourself with the product handling, safety information, and all other precautions before mounting, using, servicing, or inspecting the product.

■Mounting precautions

⚠ Caution

- ●Electrical work should only be undertaken by suitably qualified persons.
- ●Do not place the product in an area that is subject to high temperature, high humidity, excessive dusty air, corrosive gas, strong vibration and shock, or other unusual conditions. Mounting in such areas could cause a fire or malfunction.
- ●Be careful to prevent foreign objects (debris, concrete powder, iron powder, etc.) and rainwater from entering product. These materials inside the product could cause a fire or malfunction.
- ●For 4-pole breakers, be sure to connect a neutral conductor to the N pole. Otherwise, an over-current may hinder the product from tripping, thus resulting in a fire.
- ●When connecting cable or busbar to the product, tighten terminal screws to the torque specified in this manual. Otherwise, a fire could result.
- ●For front-connected breakers, Insulate all bare conductors of the line side until the breaker end. If interpole barriers are packed, be sure to use the barriers; moreover, insulate all bare conductors by insulating tape or the like so that the tape overlaps with the barriers. Insufficient insulation may result in short-circuit.

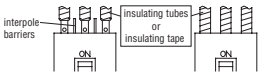

- ●Do not block the arc gas vents of the product to ensure adequate arc space. Blocking these vents could result in failure of circuit interruption.

[Earth leakage circuit breakers or Circuit breakers with earth leakage alarm]

- ●When using a 3-pole breaker in a single -phase 2-wire circuit, connect the power source to the right and left poles. Do not connect it to the central pole. Otherwise, the earth leakage tripping or earth leakage alarm function will be inoperative.
- ●Using the test button, check the breaker for normal operation. Proceed as follows: After proper connection, move the handle to the I(ON) position and then (while applying voltage to the breaker) press the test button. The breaker will trip open. If pressing the test button for 2 or 3 seconds does not cause the breaker to trip open, the breaker is out of order. Please contact your local agent or our branch office immediately.

[Meaning of indication]

⚠ Warning	Warning notice with this symbol indicates that neglecting the suggested procedure or practice could result in lethal or serious personal injury.
⚠ Caution	A caution notice with this symbol indicates that neglecting the suggested procedure or practice could result in moderate or slight personal injury and/or property damage.

■Handling Precautions

⚠ Warning

- ●The earth leakage circuit breaker trips open just when the difference between outgoing current and incoming current exceeds a specified value. Never touch two or more bare live parts simultaneously. The breaker does not respond to electric shock.
- ●Never touch terminals. Otherwise, electric shock may result.

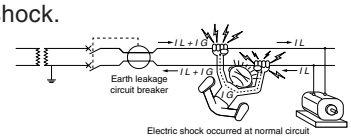

⚠ Caution

- ●When the breaker trips open automatically, remove the cause, then return the handle to the I(ON) position. Should a fault be interrupted, the breaker must be inspected. Otherwise, a fire may result.

[Earth leakage circuit breakers or Circuit breakers with earth leakage alarm]

- ●Be sure to connect the earth terminal of a load device to ground.
- ●Check the breaker for normal operation by pressing the test button once per month. (In case of leakage alarm, before testing the product, make sure that a leakage alarm from the product has no harmful effect on the electrical equipment or circuits.) If pressing the test button for 2 or 3 seconds does not cause the breaker to trip open, the breaker is out of order. Replace it by new one.

■Maintenance Precautions

⚠ Caution

- ●Service and/or inspection of the product must be done by persons having expert knowledge.
- ●Prior to commencing any work on the product, open an upstream circuit breaker or isolator to ensure that no voltage is applied to the product. Otherwise, electrical shock may result.
- ●When connecting cable or busbar to the product, tighten terminal screws to the torque specified in this manual. Otherwise, a fire could result.

5. Ordering information

Products and specifications appearing in this catalogue are subject to change (including discontinued sales) due to product improvements and other reasons, therefore contact TERASAKI or your local dealer prior to using, considering or ordering the shown products to confirm that the information in this catalogue is the up-to-date.

1 General

Features 1-2
Series configuration/appearance 1-8
Selection Chart 1-10

Based Standards	
JIS C 8201-2-1 Ann.1 Ann.2 JIS C 8201-2-2 Ann.2	Japanese Industrial Standard
IEC 60947-2	International Electrotechnical Commission
EN 60947-2	European Standard

User Friendly

Completely renewed electronic circuit breakers, ranging from

Among the industry's smallest breakers

Models sizing 100AF or 125AF are the industry's smallest, measuring just 90 mm width, 130 mm height, and 68 mm depth for 3-pole types. 630AF models are of the same dimensions as 400AF versions: 140 mm width, 260 mm height, and 103 mm depth for 3-pole types. Their compactness helps space-saving in distribution switchboards.

Smart MCCBs facilitating energy saving

Our new smart circuit breakers are capable of acquiring, displaying, and transmitting circuit information.
They help consolidate and reduce devices needed for energy management systems used at buildings and factories.

TemView PRO

Remote display

★Remote display of circuit information

The TemViewPRO Remote display (optional) can be connected to the smart circuit breakers using a single cable and easily attached to the switchboard panel. It has a back-lit LCD display that is highly visible even in dark places.

★Centralized control of circuit information

The TemComPRO Communication Module (optional) allows network communication of circuit information.
A system can be easily developed owing to the Modbus RTU communication protocol.
The TemComPRO can be mounted on a DIN rail with a snap-on mechanism and wired using connectors, so it is easy to install for additional installation.
With use of a support, the module can also be mounted on the side of the circuit breaker.

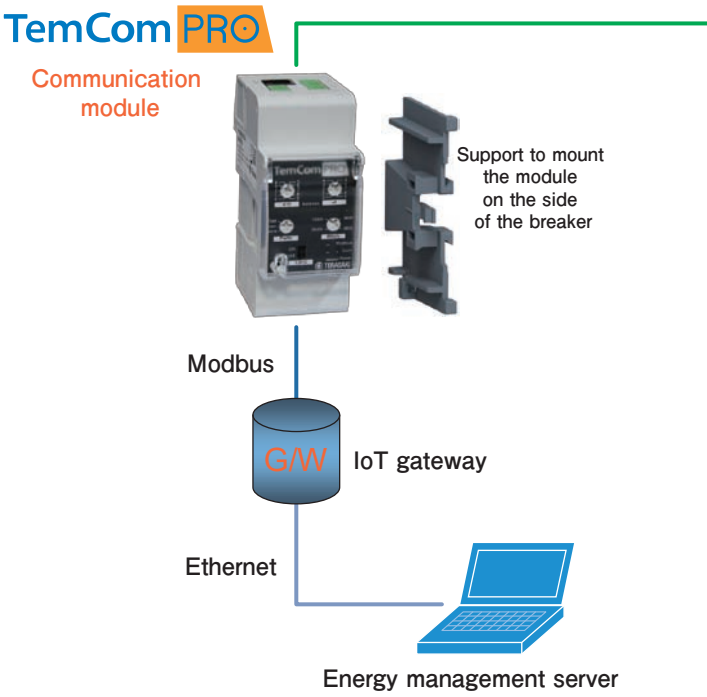

★Zone interlock function mitigates circuit damage

If an accidental short circuit or ground fault occurs in a selective coordinated circuit with short time-delay protection and ground fault protection, the circuit breaker in the immediate upstream of the accident spot can be protected by an instantaneous trip triggered as a result of deactivation of time delay settings, consequently alleviating thermal and mechanical damage to the circuit at the time of accidental short circuiting. Linkage can be established among smart circuit breakers ranging from 100AF to 630AF, as well as between the smart circuit breaker and the TemPower2 air circuit breaker.

100AF to 630AF, provide much improved user convenience.

Advanced standard series electronic circuit breakers

★Protection settings of standard series can be adjusted using multiple dials in place of conventional two dials, enabling flexible configuration of protection to meet a wide variety of needs.

★The pre-trip alarm function, which was optional for the previous series, is now available as a standard feature. With this, the load current can be constantly monitored.

★Settings for long time-delay can be configured by conventional rated current adjustment; in addition, it can be set to 91% and 100% of the rated current, in 1% increments. This allows fine tuning to suit the load conditions to be applied.

★Also equipped with a temperature self-monitoring function.
When the temperature of the circuit board inside the over-current protective device exceeds 105°C, a LED lamp lights up in red to indicate an abnormal operating status of the breaker.

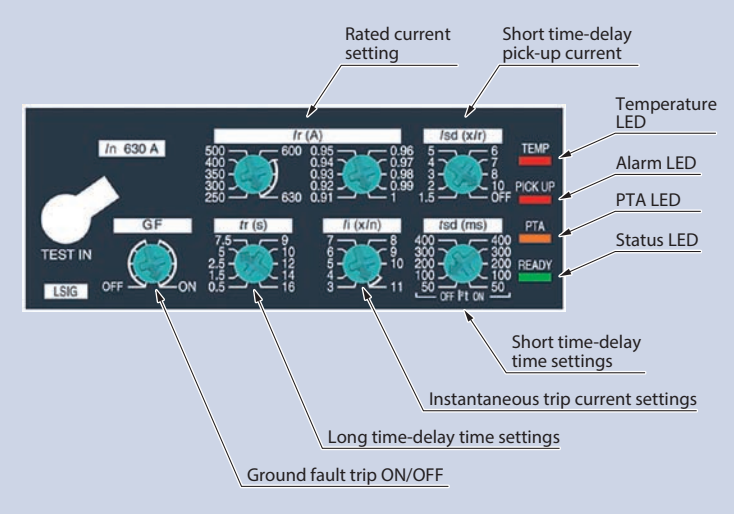

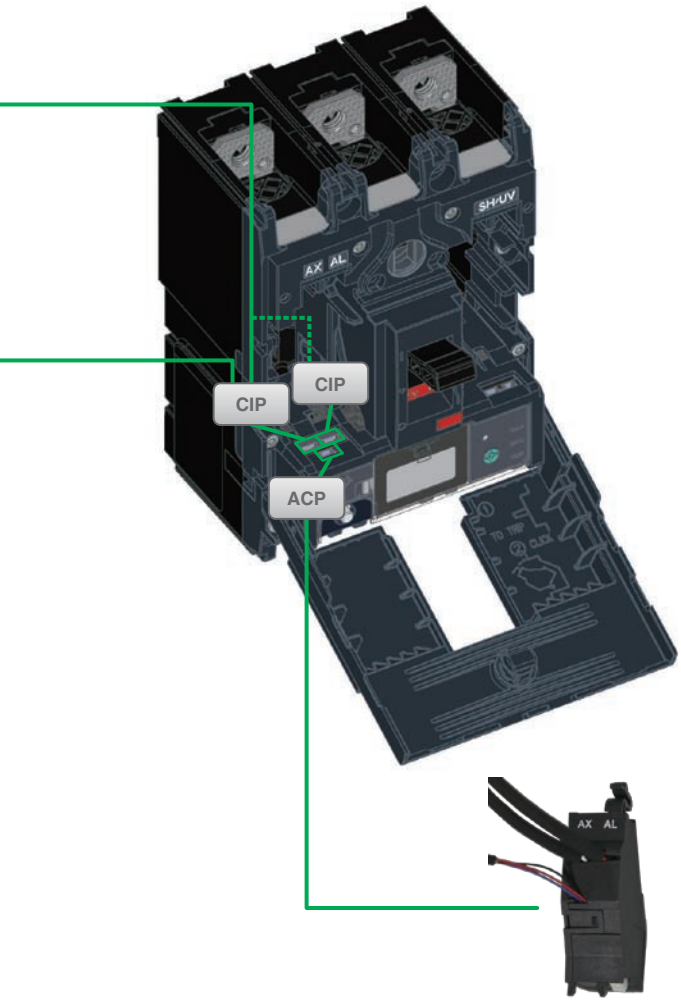

Smart AX/AL switch

★Versatile measurement functions

The following types of circuit information can be acquired. There is no need to install in-panel instruments and incidental connecting wires in the energy management system.

- Current • Voltage • Wattage • Watt-hour • Power factor
- Frequency • Total harmonic distortion • Demand current
- Demand wattage

★Precision measurement

Rogowski coils are used for current sensors.
Measurement is now possible with higher precision than previous series.
Reading errors complying with the international standard IEC 61557-12 were adopted to realize enhanced measurement accuracy: ±1% for electric current, ±0.5% for voltage, and ±2% for wattage.
This allows precise monitoring of energy use conditions.

★Great visibility

An OLED display panel is used for the display to indicate measurement values. Also, high visibility is ensured by use of symbols representing the items to be displayed.

★Excellent operability

A joystick is used for switching display screens and configuring settings.
User-friendliness improved in comparison with push-button operation adopted in conventional models.

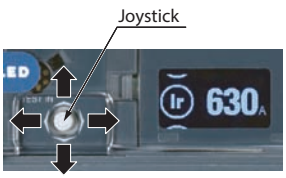

★Status indication realized by smart AX/AL switch

With a special AX/AL switch installed, the number of times the auxiliary switch and alarm switch were activated can be indicated on the display of the circuit breaker, and it is also possible to transmit the activation count, along with the status of these switches, to the network including remote displays.

Rated breaking capacity improved for 100AF - 630AF models

	TemBreak	TemBreak PRO
100AF 125AF	**S100-GF** 415V AC I_{cu}/I_{cs}=65kA/33kA	**PS125-PF** 415V AC I_{cu}/I_{cs}=70kA/50kA
225AF 250AF	**S225-GF** 415V AC I_{cu}/I_{cs}=65kA/35kA	**PS250-PF** 415V AC I_{cu}/I_{cs}=70kA/50kA
400AF	**S400-PF** 415V AC I_{cu}/I_{cs}=85kA/85kA	**PH400-CF** 415V AC I_{cu}/I_{cs}=110kA/110kA
630AF	**S630-PF** 415V AC I_{cu}/I_{cs}=100kA/50kA	**PH630-CF** 415V AC I_{cu}/I_{cs}=110kA/110kA

The 400AF/630AF models feature a pressure trip mechanism that leverages internal pressure generated at the time of a short-circuit trip, and a rotating double contact structure that has evolved from the world's first current-limiting circuit breaker technology developed by Terasaki. Owing to smooth contact separation realized by the rotating double throw contact, as well as speedy cut-off by the pressure trip mechanism, these new circuit breakers have excellent breaking performance: I_{cu}/I_{cs} = 110kA/110kA (415V AC) .

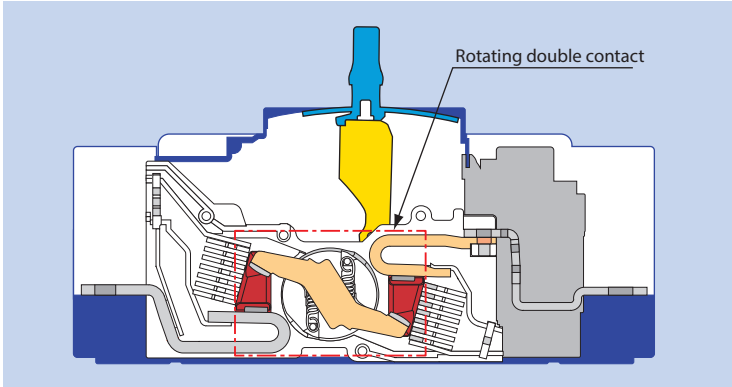

Safety inherited from *TemBreak2*

The safety-conscious functions and design features of the TemBreakPRO were taken over from the ***TemBreak2*** series.

Isolation capability

The isolation capability means that, as long as the main contact is closed, the toggle is not in the OFF position and cannot be locked at the OFF position.
The toggle being in the OFF position hence shows the main contact is open and personnel are not exposed to electrical shock hazard when working in the load side.

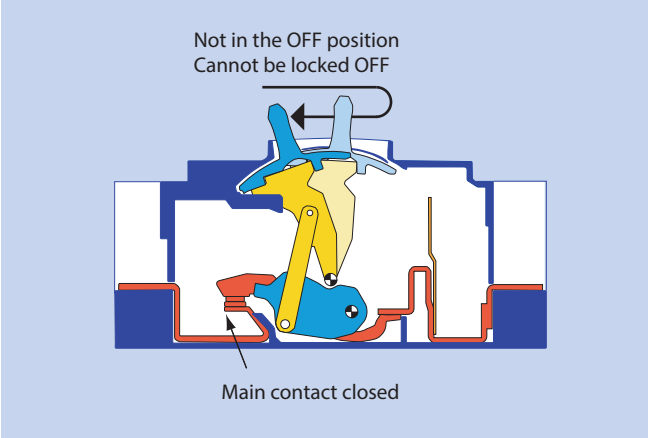

Direct Opening Action

As well as being a spring-based switching mechanism, with the forced OFF mechanism, the main contact is moved directly by the operating force from the toggle at the time of OFF operation.
It can be used as an emergency stop switch for machines which comply with IEC60204-1. Even if the internal spring mechanism is damaged, the plug-in base can be turned OFF, meaning that it is safe.

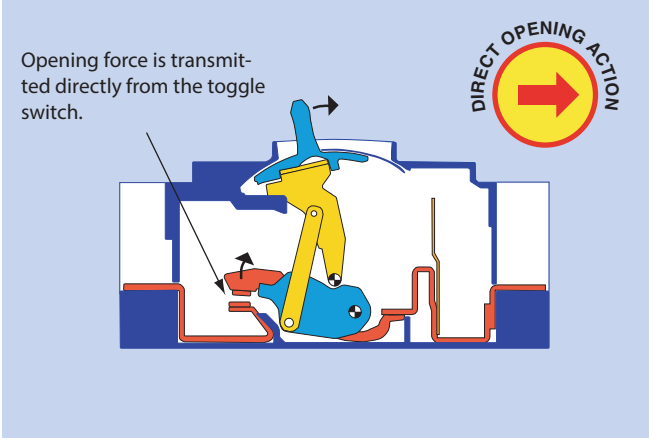

Enhanced Insulation

The risk of touching live parts has been minimized by design. If the toggle is broken by accident or misuse, no live part is exposed.
Moreover, 400AF and 630AF models adopted a pole unit structure comprising contacts and arc chambers housed in plastic cases and allocated to each pole.
This helped improve insulation performance between poles.

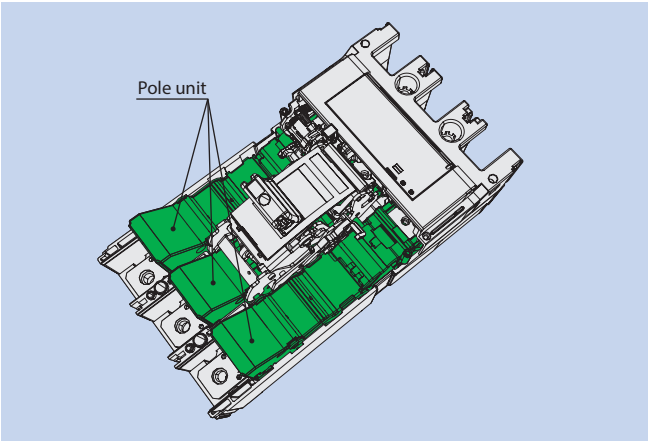

Easy-to-understand status indication

The indicator clearly shows Red when the circuit breaker is ON and Green when the breaker is OFF. No color indication means the device has tripped.
This design prevents misperception of breaker status when seen from any angle, thus ensuring safety.

Global Standard

Compatible with new JIS standards, IEC standards, and EN standards

TemBreak PRO moulded case circuit breakers comply with new JIS standards, IEC international standards and EN European standards.

New JIS standard
Moulded case circuit breakers
JIS C 8201-2-1
Earth leakage circuit breakers
JIS C 8201-2-2

IEC standard
Low-voltage switchgear and controlgear
Part2 Circuit-breakers
IEC 60947-2

Electrical Appliances and Materials Safety Act
PSE

EN standard
Low-voltage switchgear and controlgear
Part2 Circuit-breakers
EN 60947-2

They comply with the European safety EC Directive.

In addition to the models for overseas export, the standard products for domestic use comply with CE marking. (Excludes some models)

The products can be used both in Japan and overseas. (Earth leakage circuit breakers are for domestic use only.)

CE marking
☆Standard products compliance

Isolation function Indication

New JIS standard: JIS C 8201-2-1
IEC standard: IEC60947-2
EN standard: EN60947-2

Certified by the Japan Ship Technology Research Association
NK, LR, ABS, BV, CCS, KR, RINA
(Excludes some models)

Obtained CCC certification

TemBreak PRO moulded case circuit breakers comply with GB standards and are CCC certified.

CCC certification
GB standard:
GB/T 14048.2

中国国家强制性产品认证证书

证书编号：2019010307259638

委托人名称、地址

寺崎（中国）电气设备有限公司
广州增城区新塘镇太平洋五路1号

生产者（制造商）名称、地址

日本寺崎电气产业株式会社
日本大阪府大阪市平野区加美东6丁目13番47号

生产企业名称、地址

寺崎电气产业株式会社耶马溪制作所
日本大分県中津市耶马渓町大字戸原1073番地1

产品名称和系列、规格、型号

塑料外壳式断路器

PE400-NE,PS400-CE,PS400-SE,PS400-NE,PS400-GE,PS400-RE,PH400-CE,PE630-NE,PS630-CE,PS630-SE,PS630-NE,PS630-GE,PS630-RE,PH630-CE,PE400-NF,PE400-NJ,PS400-CF,PS400-CJ,PS400-SF,PS400-SJ,PS400-NF,PS400-NJ,PS400-GF,PS400-GJ,PS400-RF,PS400-RJ,PH400-CF,PH400-CJ,PE630-NF,PE630-NJ,PS630-CF,PS630-CJ,PS630-SF,PS630-SJ,PS630-NF,PS630-NJ,PS630-GF,PS630-GJ,PS630-RF,PS630-RJ,PH630-CF,PH630-CJ;详见附件

产品标准和技术要求

GB/T14048. 2-2008

上述产品符合强制性产品认证实施规则 CNCA-C03-02:2014 的要求，特发此证。

发证日期：2019 年 12 月 16 日　有效期至：2024 年 12 月 16 日

证书有效期内本证书的有效性依据发证机构的定期监督获得保持。

本证书的相关信息可通过国家认监委网站 www.cnca.gov.cn 查询

经中国合格评定国家认可委员会认可 CNAS C001-P

主 任：

中国质量认证中心

http://www.cqc.com.cn　中国·北京·南四环西路188号9区 100070　电话：+86 10 83996666

Q 2495926

●CCC certification system

The Chinese government enforces compulsory product certification covering areas such as safety and EMC for products that are distributed in China. It is prohibited to ship products that have not obtained CCC certification within China, import them into China, or sell them. TemBreak PRO products comply with GB/T 14048.2, the Chinese national standard, which is the technical standard for the CCC certification system. See page 2-52, 2-53 for details of CCC certified models.

Obtained DEKRA certification

TemBreak PRO moulded case circuit breakers have obtained certification from DEKRA in Germany, an international certification body. We passed short circuit breaking test with DEKRA as a witness. DEKRA certification is recognised for its reliability not only in Europe but all over the world.

●KEMA, the Dutch standards association for electrical equipment, came under the umbrella of DEKRA in 2011. As such, the former KEMA certification is now called DEKRA certification.

IEC SYSTEM FOR MUTUAL RECOGNITION OF TEST CERTIFICATES FOR ELECTRICAL EQUIPMENT (IECEE) CB SCHEME

CB TEST CERTIFICATE

Product	Moulded Case Circuit-breakers
Name and address of the applicant	TERASAKI ELECTRIC CO., LTD. 6-13-47 Kamihigashi, Hirano-ku, Osaka 547-0002 Japan
Name and address of the manufacturer	TERASAKI ELECTRIC CO., LTD. 6-13-47 Kamihigashi, Hirano-ku, Osaka 547-0002 Japan
Name and address of the factory	☐ Additional information on page 2 TERASAKI ELECTRIC CO., LTD. Yabakei Factory 1073-1, Tobaru Yabakei-machi Nakatsu-shi, Oita 871-0404 Japan
Ratings and principal characteristics	3-pole, 4-pole (3-pole+N), with electronic release In 250 A, 400 A, 630 A, Ue 220 Vac to 690 Vac, 50/60 Hz, Uimp = 8 kV, UI = 800 V, Suitable for isolation See annex for details of rated currents, rated voltage and Ics / Icu ratings
Trademark (if any)	TERASAKI
Customer's Testing Facility (CTF) Stage used	CTF Stage 2
Model / Type Ref.	PE...-N..., PS...-C..., PS...-S..., PS...-N..., PS...-G..., PS...- R..., PH...-C... series
Additional information (if necessary may also be reported on page 2)	☐ Additional information on page 2
A sample of the product was tested and found to be in conformity with	IEC 60947-2:2016
As shown in the Test Report Ref. No. which forms part of this Certificate	2226199.52

This CB Test Certificate is issued by the National Certification Body

DEKRA Certification B.V.
Meander 1051, NL-6825 MJ Arnhem, Netherlands

DEKRA

Date: 2019-01-09

Signature: H.L. Schendstok

page 1 of 1

Ecology

Conforms to the RoHS2 Directive

We use environmentally-friendly materials and do not use harmful substances.
We use recyclable thermoplastic resin for plastic parts and indicate the names of the materials used on the main plastic parts.
(Excludes some models)

● **Indication of material name**

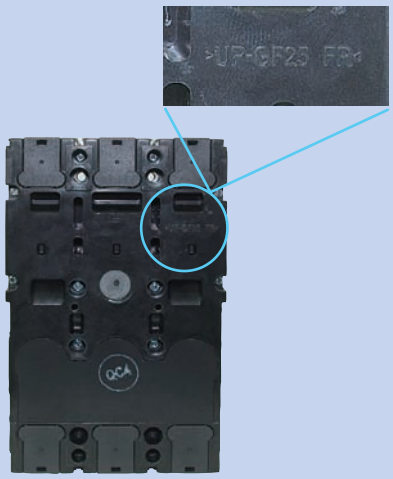

Series configuration / appearance

Moulded Case Circuit Breakers				
Economical series	Standard series		Current limiting series	
	N Standard	G High-fault level	H Standard	L High-fault level
30A Frame to 400A Frame Breaking Capacity 1.5kA to 25kA/415V AC	30A Frame to 3200A Frame Breaking Capacity 2.5kA to 85kA/415V AC	50A Frame to 1250A Frame Breaking Capacity 50kA to 100kA/415V AC	100A Frame to 1200A Frame Breaking Capacity 110kA to 125kA/415V AC	100A Frame to 800A Frame Breaking Capacity 200kA/415V AC
See page 2-2	See pages 2-3 to 2-8	See pages 2-9 to 2-12	See pages 2-13 to 2-14	See page 2-15

Moulded Case Circuit Breakers		Earth Leakage Circuit Breakers		
Switch-disconnectors	Non-automatic trip breakers	Economical series	Standard series	
			N Standard	G High-fault level
30A Frame to 1600A Frame	2000A Frame to 3200A Frame	30A Frame to 400A Frame Breaking Capacity 1.5kA to 25kA/415V AC	30A Frame to 800A Frame Breaking Capacity 2.5kA to 50kA/415V AC	100A Frame to 400A Frame Breaking Capacity65kA to 70kA/415V AC
See pages 2-17 to 2-19	See page 2-20	See pages 2-31	See pages 2-32 to 2-33	See page 2-34

Motor protection series		Single phase 3wire circuits		
Moulded Case Circuit Breakers for motor protection	Earth Leakage Circuit Breakers for motor protection	Single phase 3-wire circuit breakers with neutral phase open protection and earth leakage alarm	Single phase 3-wire circuit breakers with neutral phase open protection	Single phase 3-wire earth leakage circuit breakers with neutral phase open protection
30A Frame to 250A Frame Breaking Capacity 1.5kA to 40kA/415V AC	30A Frame to 250A Frame Breaking Capacity 1.5kA to 40kA/415V AC	125A Frame to 400A Frame Breaking Capacity 35kA to 85kA/200V AC	50A Frame to 800A Frame Breaking Capacity 10kA to 85kA/200V AC	50A Frame to 400A Frame Breaking Capacity 10kA to 85kA/200V AC
See page 2-16	See page 2-35	See pages 2-26 to 2-27	See pages 2-28 to 2-29	See pages 2-36 to 2-37

High-Performance Electronic Circuit Breaker		Circuit Breaker with Earth Leakage Alarm	690 V AC Circuit Breaker
TPOU type SMART	XOW type		
125A Frame to 630A Frame Breaking Capacity 36kA to 110kA/415V AC	400A Frame to 1000A Frame Breaking Capacity 50kA to 200kA/415V AC	50A Frame to 800A Frame Breaking Capacity 2.5kA to 70kA/415V AC	125A Frame to 800A Frame Breaking Capacity 70kA/690V AC
See pages 4-14 to 4-22	See pages 4-23 to 4-28	See pages 2-21 to 2-24	See page 4-10

For distribution boards and control boards			Heat Resistant Circuit Breaker for Emergency Power Supplies	Earth Leakage Relays
Circuit Breaker for Distribution Boards	Circuit Breaker with Earth Leakage Alarm for Distribution Boards and Control Boards	Earth Leakage Circuit Breaker for Distribution Boards and Control Boards		
30A Frame to 100A Frame Breaking Capacity 2.5kA to 5kA/240V AC	50A Frame to 100A Frame Breaking Capacity 5kA/200V AC	30A Frame to 100A Frame Breaking Capacity 2.5kA to 5kA/200V AC	50A Frame to 400A Frame Breaking Capacity 5kA to 30kA/415V AC	Rated sensitivity current 30mA or 100/200/500/1000mA switching Rated operating time 0.1s or less or 0.1 or less/0.3/0.5/1/2s selectable
See page 2-30	See page 2-25	See page 2-38	See page 4-8	See page 2-39

For DC special voltage				
Moulded Case Circuit Breakers			Switch-disconnectors	
For 1000V	For 750V	For 600V	For 1000V	For 750V
125A Frame to 800A Frame Breaking Capacity 5kA to 15kA/1000V DC	125A Frame to 800A Frame Breaking Capacity 3kA to 10kA/750V DC	50A Frame to 3200A Frame Breaking Capacity 5kA to 20kA/600V DC	125A Frame to 800A Frame	250A Frame to 800A Frame
See Catalogue I73K	See Catalogue I73K	See Catalogue I73K	See Catalogue I73K	See Catalogue I73K

Selection Chart

Moulded Case Circuit Breakers		Frame size (A)							
		30	50	60	100	125	225	250	400
E Economical series		PE30-NF 1.5kA/2.5kA	PE50-NF 2.5kA/7.5kA	PE60-NF 2.5kA/7.5kA	PE125-NF 10kA/30kA		E250-SF 25kA/35kA		E400-NF 25kA/35kA
Standard series	N Standard	PS30-NF 2.5kA/7.5kA	PS50-NF 7.5kA/15kA	PS60-NF 10kA/30kA	S125-SF 30kA/50kA		S250-SF 40kA/85kA		PS400-CF 36kA/50kA
			S50-SF 30kA/50kA		PS125-NF 36kA/50kA			Electronic PS250-NE 36kA/50kA	PS400-NF 50kA/85kA
					Electronic PS125-NE 36kA/—				Electronic PS400-NE 50kA/85kA
	G High-fault level		PS50-PF 70kA/85kA		S100-GF 65kA/85kA	S125-GF 65kA/85kA			PS400-GF 70kA/100kA
					PS125-PF 70kA/85kA		PS250-PF 70kA/85kA		Electronic PS400-GE 70kA/100kA
					Electronic PS125-PE 70kA/—			Electronic PS250-PE 70kA/85kA	
Current limiting series	H Standard				H100-NF 125kA/150kA	H125-NF 125kA/150kA	H225-NF 125kA/150kA	H250-NF 125kA/150kA	PH400-CF 110kA/125kA
							Electronic H225-NE 125kA/150kA		Electronic PH400-CE 110kA/125kA
									Electronic H400-NE 125kA/150kA
	L High-fault level				L100-NF 200kA/200kA	L125-NF 200kA/200kA	L225-NF 200kA/200kA	L250-NF 200kA/200kA	Electronic L400-NE 200kA/200kA
Moulded Case Circuit Breakers for motor protection		E30-NM 1.5kA/2.5kA	E50-NM 2.5kA/5kA		E100-NM 10kA/25kA				
		S30-NM 2.5kA/5kA	S50-NM 10kA/25kA				S250-SM 40kA/85kA		
Switch-disconnectors / Non-automatic trip breakers		PE30-NN	PE50-NN		PE125-NN		S250-SN		PS400-NN
					S125-SN		PS250-NN		
					PS125-NN				
Circuit Breaker with Earth Leakage Alarm			PE50-NFZ 2.5kA/7.5kA		PE125-NFZ 10kA/30kA		ZAE250-SF 25kA/35kA		ZAE400-NF 25kA/35kA
			PS50-NFZ 7.5kA/15kA		ZAS125-SF 30kA/50kA		ZAS250-SF 40kA/85kA		ZAS400-NF 50kA/85kA
			ZAS50-GF 65kA/85kA		ZAS100-GF 65kA/85kA	ZAS125-GF 65kA/85kA	ZAS225-GF 65kA/85kA	ZAS250-GF 65kA/85kA	ZAS400-GF 70kA/100kA
Single phase 3-wire circuit breakers with neutral phase open protection and earth leakage alarm					NAE125-SF 35kA		NAE250-SF 35kA		NAE400-NF 35kA
					NAS125-SF 50kA		NAS250-SF 85kA		NAS400-NF 85kA
Single phase 3-wire circuit breakers with neutral phase open protection			PE50-NFN 10kA		PE125-NFN 25kA		NE250-SF 35kA		NE400-NF 35kA
					NS125-SF 50kA		NS250-SF 85kA		NS400-NF 85kA
Circuit Breaker for Distribution Boards		TB-52C –/2.5kA	TB-5S 2.5kA/5kA						
			TB-5P 2.5kA/5kA						
			TB-5D –/5kA						
Circuit Breaker with Earth Leakage Alarm for Distribution Boards and Control Boards			TB50KSL –/5kA		TB100KSZ 2.5kA/5kA				
			TB50KSZ 2.5kA/5kA						

600	630	800	1000	1200	1250	1600	2000	2500	3200
S630-CF 36kA/50kA		S800-CF 36kA/50kA							
PS630-CF 36kA/50kA									
S630-NF 50kA/85kA		S800-NF 50kA/85kA							
PS630-NF 50kA/85kA									
	Electronic S630-NE 50kA/85kA	Electronic S800-NE 50kA/85kA	Electronic S1000-CE 65kA/100kA		Electronic S1250-NE 70kA/100kA	Electronic S1600-NE 85kA/125kA	Electronic XS2000NE 85kA/125kA	Electronic XS2500NE 85kA/125kA	Electronic XS3200NE 85kA/125kA
	Electronic PS630-NE 50kA/85kA								
PS630-GF 70kA/100kA		S800-RF 70kA/100kA			Electronic S1250-GE 85kA/125kA				
	Electronic PS630-GE 70kA/100kA	Electronic S800-RE 70kA/100kA							
		S800-PF 100kA/125kA							
		Electronic S800-PE 100kA/125kA							
PH630-CF 110kA/125kA									
	Electronic PH630-CE 110kA/125kA								
	Electronic H630-NE 125kA/150kA	Electronic H800-NE 125kA/150kA	Electronic TL-1000NE 125kA/150kA	Electronic TL-1200NE 125kA/150kA					
	Electronic L630-NE 200kA/200kA	Electronic L800-NE 200kA/200kA							
PS630-NN									
S630-GN		S800-NN	S1000-NN		S1250-NN	S1600-NN	XS2000NN	XS2500NN	XS3200NN
ZAS630-CF 36kA/50kA		ZAS800-CF 36kA/50kA							
ZAS630-NF 50kA/85kA		ZAS800-NF 50kA/85kA							
NS630-NF 85kA		NS800-NF 85kA							

S125-SF 30kA/50kA

415V AC I_{cu} (JIS C 8201-2-1) — 240V AC I_{cu} (JIS C 8201-2-1)

☆ For single phase 3-wire circuit breakers with neutral phase open protection, it indicates the breaking capacity at 100/200 V AC.

☆ For circuit breakers for distribution boards and control boards, it indicates the breaking capacity of 2 or 3 pole at 200 V AC.

Selection Chart

Earth Leakage Circuit Breakers	Frame size (A)							
	30	50	60	100	125	225	250	400
Economical series	PZE30-NF 1.5kA/2.5kA	PZE50-NF 2.5kA/7.5kA	PZE60-NF 2.5kA/7.5kA	PZE125-NF 10kA/30kA		ZE250-SF 25kA/35kA		ZE400-NF 25kA/35kA
Standard series: N Standard	PZS30-NF 2.5kA/7.5kA	PZS50-NF 7.5kA/15kA	PZS60-NF 10kA/30kA	ZS125-SF 30kA/50kA		ZS250-SF 40kA/85kA		ZS400-NF 50kA/85kA
		ZS50-SF 30kA/50kA						
Standard series: G High-fault level				ZS100-GF 65kA/85kA	ZS125-GF 65kA/85kA	ZS225-GF 65kA/85kA	ZS250-GF 65kA/85kA	ZS400-GF 70kA/100kA
Earth Leakage Circuit Breakers for motor protection	ZE30-NM 1.5kA/2.5kA	ZE50-NM 2.5kA/5kA		ZE100-NM 10kA/25kA				
	ZS30-NM 2.5kA/5kA	ZS50-CM 7.5kA/10kA		ZS100-SM 30kA/50kA		ZS250-SM 40kA/85kA		
Single phase 3-wire earth leakage circuit breakers with neutral phase open protection		PZE50-NFN 10kA		PZE125-NFN 25kA		ZNE250-SF 35kA		ZNE400-NF 35kA
				ZNS125-SF 50kA		ZNS250-SF 85kA		ZNS400-NF 85kA
For distribution boards and control boards	TZ30EC –/2.5kA	TZ50EE –/5kA		TZ100EC –/5kA				
	TZ52C –/2.5kA							

ZS125-SF
30kA/50kA

415V AC I_{cu} (JIS C 8201-2-2) — 240V AC I_{cu} (JIS C 8201-2-2)

☆ For single phase 3-wire earth leakage circuit breakers with neutral phase open protection, it indicates the breaking capacity at 100/200 V AC.

☆ For circuit breakers for distribution boards and control boards, it indicates the breaking capacity at 200 V AC.

600	630	800
ZS630-CF 36kA/50kA		ZS800-CF 36kA/50kA
ZS630-NF 50kA/85kA		ZS800-NF 50kA/85kA

Selection Chart

Breakers approved by NK ship classification society		Frame size (A)							
		30	50	60	100	125	225	250	400
E Economical series		PE30-NF 1.5kA/1.5kA	PE50-NF 2.5kA/2.5kA	PE60-NF 2.5kA/2.5kA	PE125-NF 10kA/5kA		E250-SF 15kA/12kA		
Standard series	N Standard	PS30-NF 2.5kA/2.5kA	PS50-NF 7.5kA/7.5kA	PS60-NF 10kA/5kA	S125-SF 25kA/13kA		S250-SF 30kA/15kA		PS400-CF 30kA/30kA
			S50-SF 25kA/13kA		PS125-NF 25kA/25kA			Electronic PS250-NE 25kA/25kA	PS400-NF 45kA/45kA
					Electronic PS125-NE 25kA/25kA				Electronic PS400-NE 45kA/45kA
	G High-fault level		PS50-PF 50kA/35kA		S100-GF 50kA/25kA	S125-GF 50kA/25kA			PS400-GF 65kA/65kA
					PS125-PF 50kA/35kA		PS250-PF 50kA/35kA		Electronic PS400-GE 65kA/65kA
					Electronic PS125-PE 50kA/30kA			Electronic PS250-PE 50kA/35kA	
Current limiting series	H Standard				H100-NF 120kA/80kA	H125-NF 120kA/80kA	H225-NF 120kA/80kA		PH400-CF 100kA/100kA
									Electronic PH400-CE 100kA/100kA
									Electronic H400-NE 120kA/80kA
	L High-fault level				L100-NF 180kA/135kA	L125-NF 180kA/135kA	L225-NF 180kA/135kA		ElectronicS L400-NE 180kA/135kA
Moulded Case Circuit Breakers for motor protection					PS125-NM 25kA/25kA				
Circuit Breaker for Distribution Boards			TB-5S 5kA/– *1						
			TB-5P 5kA/– *1						
			TB-5D 5kA/– *1						

*1) at 250V AC
2.5kA/– for 10A

S125-SF
25kA/13kA

450V AC I_{cu} (JIS C 8201-2-1)

450V AC I_{cs} (JIS C 8201-2-1)

600	630	800	1000	1200	1250
S630-CF 30kA/30kA		S800-CF 30kA/30kA			
PS630-CF 30kA/30kA					
S630-NF 45kA/45kA		S800-NF 50kA/50kA			
PS630-NF 45kA/45kA					
	Electronic S630-NE 50kA/50kA	Electronic S800-NE 50kA/50kA			Electronic S1250-NE 65kA/50kA
PS630-GF 65kA/65kA					Electronic S1250-GE 85kA/65kA
		S800-PF 85kA/50kA			
		Electronic S800-PE 85kA/50kA			
PH630-CF 100kA/100kA					
	Electronic H630-NE 125kA/94kA	Electronic H800-NE 125kA/94kA	Electronic TL-1000NE 125kA/– ＊2	Electronic TL-1200NE 125kA/– ＊2	
	Electronic L630-NE 180kA/135kA	Electronic L800-NE 180kA/135kA			

＊2) at 460V AC

2 Ratings and Specifications

Moulded Case Circuit Breakers
1 Economical series 2-2
2 Standard series 2-3
3 High-fault level series 2-9
4 Current limiting standard series 2-13
5 Current limiting High-fault level series 2-15
6 Moulded Case Circuit Breakers for motor protection 2-16
7 Switch-disconnectors 2-17
8 Non-automatic trip breakers 2-20
9 Circuit Breaker with earth leakage alarm 2-21
10 Circuit Breaker with earth leakage alarm for distribution boards and control boards 2-25
11 Single phase 3-wire circuit breaker with neutral phase open protection and earth leakage alarm 2-26
12 Single phase 3-wire circuit breaker with neutral phase open protection 2-28
13 TB series for distribution boards and control boards 2-30

Earth Leakage Circuit Breakers
14 Economical series 2-31
15 Standard series 2-33
16 High-fault level series 2-34
17 Earth Leakage Circuit Breakers for motor protection 2-35
18 Single phase 3-wire earth leakage circuit breaker with neutral phase open protection 2-36
19 Earth Leakage Circuit Breakers for distribution boards and control boards 2-38

Earth Leakage Relays
20 TZS series 2-39

21 List of breakers for marine use and rated breaking capacities (approved by ship classification societies) 2-40
22 List of breakers for CCC approved and rated breaking capacities 2-52

2 Ratings and Specifications

Moulded Case Circuit Breakers

1 Economical series

Frame size (A)	30		50		60		100		125		225		250		400
Type	PE30-NF		PE50-NF		PE60-NF		PE125-NF				E250-SF				E400-NF
Number of poles	2	3	2	3	2	3	2	3	2	3	2＊	3	2＊	3	3
■Ratings															
Rated current, A	3		15		60		60		125		125		250		250
Calibrated at 40°C	5		20				75				150				300
45°C	10		30				100				175				350
	15		40								200				400
＊2 poles breakers use the terminals of both ends of 3 poles breakers.	20		50								225				
	30														

Rated insulation voltage〔U_i〕 V			690		690		690		690		690		690		690
Rated impulse withstand voltage〔U_{imp}〕 kV			8		8		8		8		8		8		8
Rated short time withstand current〔I_{cw}〕 kA			—		—		—		—		—		—		—
Utilization Category			A		A		A		A		A		A		A
■Rated breaking capacity, kA															
JIS C 8201-2-1 Ann.1 Ann.2	AC	690V	—		—		—		—		—		—		—
IEC 60947-2		500V	—		2.5/2.5		2.5/2.5		7.5/4		7.5/4		10/7.5		10/7.5	15/15
I_{cu}/I_{cs}(sym)		440V	1.5/1.5		2.5/2.5		2.5/2.5		10/5		10/5		15/12		15/12	22/22
		415V	1.5/1.5		2.5/2.5		2.5/2.5		10/5		10/5		25/19		25/19	25/25
		380V	1.5/1.5		5/5		5/5		10/5		10/5		25/19		25/19	25/25
		240V	2.5/2.5		7.5/7.5		7.5/7.5		30/15		30/15		35/27		35/27	35/35
	① DC	250V	—		2.5/2.5 ⑰ ㉗		2.5/2.5 ⑰ ㉗		7.5/4 ⑰ ㉗		7.5/4 ⑰ ㉗		15/12 ⑱		15/12 ⑱	25/19
		125V	—		2.5/2.5 ⑰ ㉗		2.5/2.5 ⑰ ㉗		7.5/4 ⑰ ㉗		7.5/4 ⑰ ㉗		25/19 ⑱		25/19 ⑱	40/30
NK	AC	690V	—		—		—		—		—		—		—	—
I_{cu}/I_{cs}(sym)		450V	1.5/1.5		2.5/2.5		2.5/2.5		10/5		10/5		15/12		15/12	—
		240V	2.5/2.5		7.5/7.5		7.5/7.5		30/15		30/15		35/27		35/27	—
	① DC	250V	—		2.5/2.5 ⑰ ㉗		2.5/2.5 ⑰ ㉗		7.5/4 ⑰ ㉗		7.5/4 ⑰ ㉗		—		—	—
■External dimensions, mm															
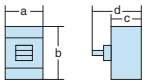		a	50	75	50	75	50	75	50	75	50	75	105	105	105	105	140
		b	130		130		130		130		130		165		165		260
		c	68		68		68		68		68		68		68		103
		d	90		90		90		90		90		95		95		145
Weight (◉ marked standard type) kg			0.5	0.7	0.5	0.7	0.6	0.8	0.6	0.8	0.6	0.8	1.5	1.5	1.5	1.5	4.2
■Connections and Mountings															
Front-connected (FC)	Terminal screws		◉ ㊺		◉ ㊺		◉		◉		◉		◉		◉		◉
	With extension bars		○ ㊸		○ ㊸		○ ㊸		○ ㊸		○ ㊸		○ ㊸		○ ㊸		○
Rear-connected (RC)	Flat bar studs		○		○		○		○		○		○		○		○
Plug-in (PM) For switchboards	High-performance (PMB)		—		—		—		—		—		—		—		—
	Standard (PMC)		—	○	—	○	—	○	—	○	—	○	○		○		—
For distribution boards (PMD)			○		○		○		○		○		—		—		—
Flush-mounted (FP)	With flat bar studs		○		○		○		○		○		○		○		○
Draw-out type (DR)			—		—		—		—		—		—		—		—
TemPlug70 (PG)			—		—		—		—		—		—	○	—	○	○
DIN rail mount			—	○ ⑪	—	○ ⑪	—	○ ⑪	—	○ ⑪	—	○ ⑪	—		—		—
■Accessories (optional)		Symbol															
Internally mounted: Auxiliary switch		A X	●		●		●		●		●		●		●		●
Internally mounted: Alarm switch		A L	●		●		●		●		●		●		●		●
Internally mounted: Shunt trips		S H	●		●		●		●		●		●		●		●
Internally mounted: Undervoltage trips		U V	●		●		●		●		●		●		●		●
Externally mounted: Motor operator		M C	—		—		—		—		—		●		●		●
External operating handle	Breaker-mounted	H B	—	●	—	●	—	●	—	●	—	●	●		●		●
	Door-mounted (variable depth)	H P	—	●	—	●	—	●	—	●	—	●	●		●		●
Toggle extension		H A	—		—		—		—		—		—		—		●
Mechanical interlock	Slide type	M S	—	●	—	●	—	●	—	●	—	●	●		●		●
	Rear-connected type	M B	—		—		—		—		—		—		—		—
	Link type	M L	—		—		—		—		—		●		●		●
	Wire type	M W	—		—		—		—		—		●		●		●
Toggle holder		H H	●		●		●		●		●		●		●		●
Toggle lock		H L	●		●		●		●		●		●		●		
Terminal cover	For front-connected	C F	●		●		●		●		●		●		●		●
	For rear-connected and plug-in	C R	●		●		●		●		●		●		●		●
Terminal block for lead		T F	●		●		●		●		●		●		●		●
Door flange		D F	●		●		●		●		●		●		●		●
CE marking			Yes		Yes		Yes		Yes		Yes		Yes		Yes		Yes
Overcurrent trip mechanism			Thermal-magnetic⑦		Thermal-magnetic		Thermal-magnetic		Thermal-magnetic		Thermal-magnetic		Thermal-magnetic		Thermal-magnetic		Thermal-magnetic
Colour of cover			Grey Blue		Grey Blue		Grey Blue		Grey Blue		Grey Blue		Grey Blue		Grey Blue		Grey Blue
Trip button (Colour)			Yes (Red)		Yes (Red)		Yes (Red)		Yes (Red)		Yes (Red)		Yes (Red)		Yes (Red)		Yes (Red)
Suitability for isolation			Yes		Yes		Yes		Yes		Yes		Yes		Yes		Yes
Reverse connection			Yes ⑫		Yes		Yes		Yes		Yes		Yes		Yes		Yes
Page of characteristics and outline dimensions			7-4		7-4		7-8		7-8		7-8		7-28		7-28		7-42

Notes:

◉ : Standard. This configuration used unless otherwise specified. ○ : Optional standard. Specify when ordering.

● : "yes" or "available". — : "no" or "not available".

① : DC is a special specification. When ordering, please specify DC. ⑦ : Hydraulic-magnetic type for below 10A rating.

⑪ : Please order the DIN rail adapter separately. See page 6-152. ⑰ : See page 4-7 for the instantaneous trip value when using with DC.

㉗ : Applicable to only 2 poles breakers. ㊺ : A wire clamping terminal is provided. ㊸ : For the extension bars, please place the order separately in parts.

⑫ : There are some limitations. See page 5-23 for details. ⑱ : DC is a 2-pole product that uses both ends of a 3-pole circuit breaker.

Frame size (A)			30		50		50			60								
Type			PS30-NF		PS50-NF		S50-SF			PS60-NF								
Number of poles			2	3	2	3	2	3	4	2	3							
■Ratings																		
Rated current, A			3		15		15			60								
Calibrated at 40°C			5		20		20											
45°C			10		30		30											
			15		40		40											
			20		50		50											
			30															
Rated insulation voltage 〔U_i〕 V			690		690		690			690								
Rated impulse withstand voltage 〔U_{imp}〕 kV			8		8		8			8								
Rated short time withstand current 〔I_{cw}〕 kA			—		—		—			—								
Utilization Category			A		A		A			A								
■Rated breaking capacity, kA																		
JIS C 8201-2-1 Ann.1 Ann.2	AC	690V	—		—		6/3			—								
IEC 60947-2		500V	2.5/2.5		7.5/7.5		12/6			7.5/4								
I_{cu}/I_{cs}(sym)		440V	2.5/2.5		7.5/7.5		25/13			10/5								
		415V	2.5/2.5		7.5/7.5		30/15			10/5								
		380V	5/5		7.5/7.5		30/15			10/5								
		240V	7.5/7.5		15/15		50/25			30/15								
	① DC	250V	2.5/2.5 ⑰ ⑲ ㉗		7.5/7.5 ⑰ ㉗		25/13 ⑰ ㉗			7.5/4 ⑰ ㉗								
		125V	2.5/2.5 ⑰ ⑲ ㉗		7.5/7.5 ⑰ ㉗		40/20 ⑰ ㉗			7.5/4 ⑰ ㉗								
NK	AC	690V	—		—		—			—								
I_{cu}/I_{cs}(sym)		450V	2.5/2.5		7.5/7.5		25/13			10/5								
		240V	7.5/7.5		15/15		50/25			30/15								
	① DC	250V	2.5/2.5 ⑰ ⑲ ㉗		7.5/7.5 ⑰ ㉗		25/13 ⑰ ㉗			7.5/4 ⑰ ㉗								
■External dimensions, mm																		
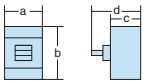		a	50	75	50	75	50	75	100	50	75							
		b	130		130		130			130								
		c	68		68		68			68								
		d	90		90		95			90								
Weight (◉ marked standard type) kg			0.5	0.7	0.5	0.7	0.6	0.8	1.0	0.6	0.8							
■Connections and Mountings																		
Front-connected (FC)	Terminal screws		◉ ㊺		◉ ㊺		◉ ㊺			◉								
	With extension bars		○ ㊸		○ ㊸		○ ㊸			○ ㊸								
Rear-connected (RC)	Flat bar studs		○		○		○			○								
Plug-in (PM) For switchboards	High-performance (PMB)		—		—		—			—								
	Standard (PMC)		—	○	—	○	—	○	—	—	○							
For distribution boards (PMD)			○		○		○		—	○								
Flush-mounted (FP)	With flat bar studs		○		○		○		—	○								
Draw-out type (DR)			—		—		—			—								
TemPlug70 (PG)			—		—		○		—	—								
DIN rail mount			—	○ ⑪	—	○ ⑪	—	○ ⑪		—	○ ⑪							
■Accessories (optional)		Symbol																
Internally mounted	Auxiliary switch	A X	●		●		●			●								
	Alarm switch	A L	●		●		●			●								
	Shunt trips	S H	●		●		●			●								
	Undervoltage trips	U V	●		●		●			●								
Externally mounted	Motor operator	M C	—		—		—			—								
	External operating handle: Breaker-mounted	H B	—	●	—	●	—	●		—	●							
	External operating handle: Door-mounted (variable depth)	H P	—	●	—	●	—	●		—	●							
	Toggle extension	H A	—		—		—			—								
	Mechanical interlock: Slide type	M S	—	●	—	●	—	●		—	●							
	Mechanical interlock: Rear-connected type	M B	—		—		—			—								
	Mechanical interlock: Link type	M L	—		—		—			—								
	Mechanical interlock: Wire type	M W	—		—		—			—								
	Toggle holder	H H	●		●		●			●								
	Toggle lock	H L	●		●		●			●								
	Terminal cover: For front-connected	C F	●		●		●			●								
	Terminal cover: For rear-connected and plug-in	C R	●		●		●			●								
	Terminal block for lead	T F	●		●		●			●								
	Door flange	D F	●		●		●			●								
CE marking			Yes		Yes		Yes			Yes								
Overcurrent trip mechanism			Thermal-magnetic ⑦		Thermal-magnetic		Thermal-magnetic			Thermal-magnetic								
Colour of cover			Grey Blue		Grey Blue		Grey Blue			Grey Blue								
Trip button (Colour)			Yes (Red)		Yes (Red)		Yes (Red)			Yes (Red)								
Suitability for isolation			Yes		Yes		Yes			Yes								
Reverse connection			Yes ㉒		Yes		Yes			Yes								
Page of characteristics and outline dimensions			7-4		7-4		7-6			7-8								

Notes:

◉ : Standard. This configuration used unless otherwise specified. ○ : Optional standard. Specify when ordering.
● : "yes" or "available". — : "no" or "not available".
① : DC is a special specification. When ordering, please specify DC. ⑦ : Hydraulic-magnetic type for below 10A rating.
⑪ : Please order the DIN rail adapter separately. See page 6-152.
⑰ : See page 4-7 for the instantaneous trip value when using with DC. ⑲ : Only applicable for 15 A and above. ㉗ : Applicable to only 2 poles breakers.
㊺ : A wire clamping terminal is provided. ㊸ : For the extension bars, please place the order separately in parts. ㉒ : There are some limitations. See page 5-23 for details.

Frame size (A)	100			125			100			125		
Type	S125-SF						PS125-NF					
Number of poles	2	3	4	2	3	4	2	3	4	2	3	4
■Ratings												
Rated current, A	15	60		125			15	60		125		
Calibrated at 40°C	20	75					20	75				
45°C	30	100					30	100				
	40						40					
	50						50					
Rated insulation voltage〔U_i〕 V	690			690			800			800		
Rated impulse withstand voltage〔U_{imp}〕 kV	8			8			8			8		
Rated short time withstand current〔I_{cw}〕 kA	—			—			—			—		
Utilization Category	A			A			A			A		
■Rated breaking capacity, kA												
JIS C 8201-2-1 Ann.1 Ann.2 AC 690V	6/3			6/3			6/6			6/6		
IEC 60947-2 500V	12/6			12/6			22/22			22/22		
I_{cu}/I_{cs}(sym) 440V	25/13			25/13			25/25			25/25		
415V	30/15			30/15			36/36			36/36		
380V	30/15			30/15			36/36			36/36		
240V	50/25			50/25			50/50			50/50		
① DC 250V	25/13 ⑰ ㉗			25/13 ⑰ ㉗			25/19 ⑰ ㉗			25/19 ⑰ ㉗		
125V	40/20 ⑰ ㉗			40/20 ⑰ ㉗			25/19 ⑰ ㉗			25/19 ⑰ ㉗		
NK AC 690V	—			—			6/6			6/6		
I_{cu}/I_{cs}(sym) 450V	25/13			25/13			25/25			25/25		
240V	50/25			50/25			50/50			50/50		
① DC 250V	25/13 ⑰ ㉗			25/13 ⑰ ㉗			25/19 ⑰ ㉗			25/19 ⑰ ㉗		
■External dimensions, mm												
a	50	75	100	50	75	100	60	90	120	60	90	120
b	130			130			130			130		
c	68			68			68			68		
d	95			95			95.5			95.5		
Weight (◉ marked standard type) kg	0.6	0.8	1.0	0.6	0.8	1.0	0.7	1.0	1.3	0.7	1.0	1.3
■Connections and Mountings												
Front-connected (FC) Terminal screws	◉ ④			◉			◉			◉		
With extension bars	○ ㊸			○ ㊸			○ ㊸			○ ㊸		
Rear-connected (RC) Flat bar studs	○			○			○			○		
Plug-in (PM) For switchboards High-performance (PMB)	—			—			—	○ ㊿		—	○ ㊿	
Standard (PMC)	—	○	—	—	○	—	○		—	○		—
For distribution boards (PMD)	○		—	○		—	—	○	—	—	○	—
Flush-mounted (FP) With flat bar studs	○		—	○		—	○			○		
Draw-out type (DR)	—			—			—			—		
TemPlug70 (PG)	○		—	○		—	○		—	○		—
DIN rail mount	—	○ ⑪		—	○ ⑪		—	○ ⑪		—	○ ⑪	
■Accessories (optional) Symbol												
Internally mounted: Auxiliary switch A X	●			●			●			●		
Alarm switch A L	●			●			●			●		
Shunt trips S H	●			●			●			●		
Undervoltage trips U V	●			●			●			●		
Externally mounted: Motor operator M C	—			—			—	●		—	●	
External operating handle: Breaker-mounted H B	—	●		—	●		—	●		—	●	
Door-mounted (variable depth) H P	—	●		—	●		—	●		—	●	
Toggle extension H A	—			—			—			—		
Mechanical interlock: Slide type M S	—	●		—	●		—	●		—	●	
Rear-connected type M B	—			—			—			—		
Link type M L	—			—			—	●		—	●	
Wire type MW	—			—			—	●		—	●	
Toggle holder H H	●			●			●			●		
Toggle lock H L	●			●			●			●		
Terminal cover: For front-connected C F	●			●			●			●		
For rear-connected and plug-in C R	●			●			●			●		
Terminal block for lead T F	●			●			●			●		
Door flange D F	●			●			●			●		
CE marking	Yes			Yes			Yes			Yes		
Overcurrent trip mechanism	Thermal-magnetic			Thermal-magnetic			Thermal-magnetic			Thermal-magnetic		
Colour of cover	Grey Blue			Grey Blue			Grey Blue			Grey Blue		
Trip button (Colour)	Yes (Red)			Yes (Red)			Yes (Red)			Yes (Red)		
Suitability for isolation	Yes			Yes			Yes			Yes		
Reverse connection	Yes			Yes			Yes			Yes		
Page of characteristics and outline dimensions	7-10			7-10			7-12			7-12		

Notes:
◉ : Standard. This configuration used unless otherwise specified. ○ : Optional standard. Specify when ordering.
● : "yes" or "available". — : "no" or "not available".
① : DC is a special specification. When ordering, please specify DC.
④ : 50A or less is the M5 wire clamping terminal. ⑪ : Please order the DIN rail adapter separately. See page 6-152.
⑰ : See page 4-7 for the instantaneous trip value when using with DC. ㉗ : Applicable to only 2 poles breakers.
㊿ : A safety trip function is provided. ㊸ : For the extension bars, please place the order separately in parts.

Frame size (A)	100		125		225			250			250		400	
Type	PS125-NE				S250-SF						PS250-NE		PS400-CF	
Number of poles	3	4	3	4	2∗	3	4	2∗	3	4	3	4	3	4
■Ratings														
Rated current, A	Adjustable		Adjustable		125			250			Adjustable		225	
Calibrated at 40°C	I_n=100		I_n=125		150						I_n=250		250	
45°C	40	75	125		175						125	200	300	
	50	100			200						150	225	350	
∗2 poles breakers use the terminals of both ends of 3 poles breakers.	60				225						175	250	400	
	63	⑥①												

Rated insulation voltage 〔U_i〕 V			800		800		690			690			800		800	
Rated impulse withstand voltage 〔U_{imp}〕 kV			8		8		8			8			8		8	
Rated short time withstand current 〔I_{cw}〕 kA			—		—		—			—			—		—	
Utilization Category			A		A		A			A			A		A	
■Rated breaking capacity, kA																
JIS C 8201-2-1 Ann.1 Ann.2	AC	690V	6/6		6/6		4/4			4/4			6/6		7/7	
IEC 60947-2		500V	22/22		22/22		25/13			25/13			22/22		25/25	
I_{cu}/I_{cs}(sym)		440V	25/25		25/25		30/15			30/15			25/25		30/30	
		415V	36/36		36/36		40/20			40/20			36/36		36/36	
		380V	36/36		36/36		40/20			40/20			36/36		36/36	
		240V	—		—		85/43			85/43			50/50		50/50	
	① DC	250V	—		—		25/13 ⑧⑨			25/13 ⑧⑨			—		25/25 ⑰	
		125V	—		—		40/20 ⑧⑨			40/20 ⑧⑨			—		40/40 ⑰	
NK	AC	690V	6/6		6/6		—			—			6/6		7/7	
I_{cu}/I_{cs}(sym)		450V	25/25		25/25		30/15			30/15			25/25		30/30	
		240V	50/50		50/50		85/43			85/43			50/50		50/50	
	① DC	250V	50/50		50/50		25/13 ⑧⑨			25/13 ⑧⑨			—		25/25 ⑰	
■External dimensions, mm																
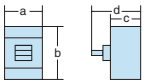		a	90	120	90	120	105	105	140	105	105	140	105	140	140	185
		b	130		130		165			165			165		260	
		c	68		68		68			68			68		103	
		d	95.5		95.5		95			95			95.5		151	
Weight (◉ marked standard type) kg			1.0	1.3	1.0	1.3	1.5	1.5	1.9	1.5	1.5	1.9	1.5	2.0	5.5	7.3
■Connections and Mountings																
Front-connected (FC)	Terminal screws		◉		◉		◉			◉			◉		◉	
	With extension bars		○ ⑤③		○ ⑤③		○ ⑤③			○ ⑤③			○ ⑤③		○	
Rear-connected (RC)	Flat bar studs		○		○		○			○			○		○	
Plug-in (PM) For switchboards	High-performance (PMB)		○ ⑤⓪		○ ⑤⓪		—			—			○ ⑤⓪		○ ⑤⓪	
	Standard (PMC)		○	—	○	—	○			○			○	—	○	—
For distribution boards (PMD)			○	—	○	—	—			—			—		—	
Flush-mounted (FP)	With flat bar studs		○		○		○			○			○		○	
Draw-out type (DR)			—		—		—			—			▲		▲	
TemPlug70 (PG)			○	—	○	—	—	○	—	—	○	—	○	—	○	—
DIN rail mount			○ ⑪		○ ⑪		—			—			—		—	
■Accessories (optional)		Symbol														
Internally mounted: Auxiliary switch		A X	●		●		●			●			●		●	
Internally mounted: Alarm switch		A L	●		●		●			●			●		●	
Internally mounted: Shunt trips		S H	●		●		●			●			●		●	
Internally mounted: Undervoltage trips		U V	●		●		●			●			●		●	
Externally mounted: Motor operator		M C	●		●		●			●			●		●	
External operating handle	Breaker-mounted	H B	●		●		●			●			●		●	
	Door-mounted (variable depth)	H P	●		●		●			●			●		●	
Toggle extension		H A	—		—		—			—			—		●	
Mechanical interlock ⑨	Slide type	M S	●		●		●			●			●		●	
	Rear-connected type	M B	—		—		—			—			—		—	
	Link type	M L	●		●		●			●			●		●	
	Wire type	M W	●		●		●			●			●		●	
Toggle holder		H H	●		●		●			●			●		●	
Toggle lock		H L	●		●		●			●			●			
Terminal cover	For front-connected	C F	●		●		●			●			●		●	
	For rear-connected and plug-in	C R	●		●		●			●			●		●	
Terminal block for lead		T F	●		●		●			●			●		●	
Door flange		D F	●		●		●			●			●		●	
CE marking			Yes		Yes		Yes			Yes			Yes		Yes	
Overcurrent trip mechanism			Electronic		Electronic		Thermal-magnetic			Thermal-magnetic			Electronic		Thermal-magnetic (adjustable)	
Colour of cover			Grey Blue		Grey Blue		Grey Blue			Grey Blue			Grey Blue		Grey Blue	
Trip button (Colour)			Yes (Red)		Yes (Red)		Yes (Red)			Yes (Red)			Yes (Red)		Yes (Red)	
Suitability for isolation			Yes		Yes		Yes			Yes			Yes		Yes	
Reverse connection			Yes		Yes		Yes			Yes			Yes		Yes	
Page of characteristics and outline dimensions			7-16		7-16		7-30			7-30			7-34		7-44	

Notes:

◉ : Standard. This configuration used unless otherwise specified. ○ : Optional standard. Specify when ordering.
▲ : Semi-standard. ● : "yes" or "available". — : "no" or "not available".
① : DC is a special specification. When ordering, please specify DC. ⑨ : Mechanical interlocks cannot be applied to draw-out type (DR).
⑪ : Please order the DIN rail adapter separately. See page 6-152. ⑰ : See page 4-7 for the instantaneous trip value when using with DC.
⑤⓪ : A safety trip function is provided. ⑤③ : For the extension bars, please place the order separately in parts.
⑥① : Does not comply with Electrical Appliances and Materials Safety Act at rated current 100 A or less because it is an adjustable product. Also, it cannot be used at voltages other than rated operational voltage 380 V to 690 V AC. Please contact us for details.
⑧⑨ : DC is a 2-pole product that uses both ends of a 3-pole circuit breaker.

Frame size (A)	400		400		600		630		600		600		630		600	
Type	PS400-NF		PS400-NE		S630-CF				PS630-CF		S630-NF				PS630-NF	
Number of poles	3	4	3	4	3	4	3	4	3	4	3	4	3	4	3	4
■Ratings																
Rated current, A	225		Adjustable		500		630		500		500		630		500	
Calibrated at 40°C	250		I_n=250	I_n=400	600				600		600				600	
45°C	300		125	175					⑱						⑱	
	350		150	200												
	400		175	225												
			200	250												
			225	300												
			250	350												
				400												
Rated insulation voltage〔U_i〕 V	800		800		690		690		800		690		690		800	
Rated impulse withstand voltage〔U_{imp}〕 kV	8		8		8		8		8		8		8		8	
Rated short time withstand current〔I_{cw}〕 kA	—		5 (0.4sec.)		—		—		—		—		—		—	
Utilization Category	A		B		A		A		A		A		A		A	
■Rated breaking capacity, kA																
JIS C 8201-2-1 Ann.1 Ann.2 AC 690V	12/12		12/12		10/10		10/10		7/7		20/20		20/20		12/12	
IEC 60947-2 AC 500V	30/30		30/30		15/15		15/15		25/25		30/30		30/30		30/30	
I_{cu}/I_{cs}(sym) AC 440V	45/45		45/45		30/30		30/30		30/30		50/50		50/50		45/45	
AC 415V	50/50		50/50		36/36		36/36		36/36		50/50		50/50		50/50	
AC 380V	50/50		50/50		36/36		36/36		36/36		50/50		50/50		50/50	
AC 240V	85/85		85/85		50/50		50/50		50/50		85/85		85/85		85/85	
① DC 250V	50/50 ⑰		—		50/50		50/50		25/25 ⑰		50/50		50/50		50/50 ⑰	
DC 125V	50/50 ⑰		—		50/50		50/50		40/40 ⑰		50/50		50/50		50/50 ⑰	
NK AC 690V	12/12		12/12		10/10		10/10		7/7		20/20		20/20		12/12	
I_{cu}/I_{cs}(sym) AC 450V	45/45		45/45		30/30		30/30		30/30		50/50		50/50		45/45	
AC 240V	85/85		85/85		50/50		50/50		50/50		85/85		85/85		85/85	
① DC 250V	50/50 ⑰		—		—		—		—		—		—		—	
■External dimensions, mm																
a	140	185	140	185	210	280	210	280	140	185	210	280	210	280	140	185
b	260		260		273		273		260		273		273		260	
c	103		103		103		103		103		103		103		103	
d	151		151		145		145		151		145		145		151	
Weight (◉ marked standard type) kg	5.5	7.3	5.7	7.5	8.0	11.0	8.0	11.0	5.9	7.8	8.0	11.0	8.0	11.0	5.9	7.8
■Connections and Mountings																
Front-connected (FC) Terminal screws	◉		◉		—		—		—		—		—		—	
With extension bars	○		○		◉		◉		◉		◉		◉		◉	
Rear-connected (RC) Flat bar studs	○		○		○		○		○		○		○		○	
Plug-in (PM) For switchboards High-performance (PMB)	○ ⑤⓪		○ ⑤⓪		○ ⑤①		○ ⑤①		○ ⑤⓪		○ ⑤①		○ ⑤①		○ ⑤⓪	
Standard (PMC)	○	—	○	—	○	—	○	—	○	—	○	—	○	—	○	—
For distribution boards (PMD)	—		—		—		—		—		—		—		—	
Flush-mounted (FP) With flat bar studs	○		○		○		○		○		○		○		○	
Draw-out type (DR)	▲		▲		▲		▲		▲		▲		▲		▲	
TemPlug70 (PG)	○	—	○	—	○	—	○	—	○	—	○	—	○	—	○	—
DIN rail mount	—		—		—		—		—		—		—		—	
■Accessories (optional) Symbol																
Internally mounted: Auxiliary switch A X	●		●		●		●		●		●		●		●	
Alarm switch A L	●		●		●		●		●		●		●		●	
Shunt trips S H	●		●		●		●		●		●		●		●	
Undervoltage trips U V	●		●		●		●		●		●		●		●	
Externally mounted: Motor operator M C	●		●		●		●		●		●		●		●	
External operating handle: Breaker-mounted H B	●		●		●		●		●		●		●		●	
Door-mounted (variable depth) H P	●		●		●		●		●		●		●		●	
Toggle extension H A	●		●		●		●		●		●		●		●	
Mechanical interlock ⑨: Slide type M S	●		●		●		●		●		●		●		●	
Rear-connected type M B	—		—		—		—		—		—		—		—	
Link type M L	●		●		●		●		●		●		●		●	
Wire type M W	●		●		●		●		●		●		●		●	
Toggle holder H H	●		●		●		●		●		●		●		●	
Toggle lock H L																
Terminal cover: For front-connected C F	●		●		●		●		●		●		●		●	
For rear-connected and plug-in C R	●		●		●		●		●		●		●		●	
Terminal block for lead T F	●		●		●		●		●		●		●		●	
Door flange D F	●		●		●		●		●		●		●		●	
CE marking	Yes		Yes		Yes		Yes		Yes		Yes		Yes		Yes	
Overcurrent trip mechanism	Thermal-magnetic (adjustable)		Electronic		Thermal-magnetic (adjustable)		Thermal-magnetic (adjustable)		Thermal-magnetic (adjustable)		Thermal-magnetic (adjustable)		Thermal-magnetic (adjustable)		Thermal-magnetic (adjustable)	
Colour of cover	Grey Blue		Grey Blue		Grey Blue		Grey Blue		Grey Blue		Grey Blue		Grey Blue		Grey Blue	
Trip button (Colour)	Yes (Red)		Yes (Red)		Yes (Red)		Yes (Red)		Yes (Red)		Yes (Red)		Yes (Red)		Yes (Red)	
Suitability for isolation	Yes		Yes		Yes		Yes		Yes		Yes		Yes		Yes	
Reverse connection	Yes		Yes		Yes		Yes		Yes		Yes		Yes		Yes	
Page of characteristics and outline dimensions	7-44		7-46		7-54		7-54		7-58		7-54		7-54		7-58	

Notes:
◉ : Standard. This configuration used unless otherwise specified. ○ : Optional standard. Specify when ordering.
▲ : Semi-standard. ● : "yes" or "available". — : "no" or "not available".
① : DC is a special specification. When ordering, please specify DC.
⑨ : Mechanical interlocks cannot be applied to draw-out type (DR).
⑰ : See page 4-7 for the instantaneous trip value when using with DC.
⑤⓪ : A safety trip function is provided. ⑤① : A safety lock function is provided.
⑱ : Plug-in type (PM), draw-out type (DR), and TemPlug70 (PG) are only 500A.

Frame size (A)	630	630	800	800	800	1000	1250	1600
Type	**S630-NE**	**PS630-NE**	**S800-CF**	**S800-NF**	**S800-NE**	**S1000-CE**	**S1250-NE**	**S1600-NE**
Number of poles	3 4	3 4	3 4	3 4	3 4	3 4	3 4	3 4
■Ratings								
Rated current, A	Adjustable	Adjustable	700	700	Adjustable	Adjustable	Adjustable	Adjustable
Calibrated at 40°C	I_{CT}=630	I_n=630	800	800	I_{CT}=800	I_{CT}=1000	I_{CT}=1250	I_{CT}=1600
45°C	250	250			350 600	400 800	500 1000	700 1200
	300	300			400 700	500 900	600 1200	800 1400
	350	350			450 800	600 1000	700 1250	900 1500
	400	400			500	700	800	1000 1600
	500	500						
	600	600						
	630	630						
Rated insulation voltage〔U_i〕 V	690	800	690	690	690	690	690	690
Rated impulse withstand voltage〔U_{imp}〕 kV	8	8	8	8	8	8	8	8
Rated short time withstand current〔I_{cw}〕 kA	10(0.3sec.)	—	—	—	10(0.3sec.)	—	15 (0.3sec.)	20 (0.3sec.)
Utilization Category	B	A	A	A	B	A	B	B
■Rated breaking capacity, kA								
JIS C 8201-2-1 Ann.1 Ann.2 AC 690V	20/20	12/12	10/10	20/20	20/20	25/19	25/20	45/34
IEC 60947-2 500V	30/30	30/30	15/15	30/30	30/30	45/34	45/34	65/50
I_{cu}/I_{cs}(sym) 440V	50/50	45/45	30/30	50/50	50/50	65/50	65/50	85/65
415V	50/50	50/50	36/36	50/50	50/50	65/50	70/50	85/65
380V	50/50	50/50	36/36	50/50	50/50	85/50	85/65	100/75
240V	85/85	85/85	50/50	85/85	85/85	100/75	100/75	125/94
① DC 250V	—	—	50/50	50/50	—	—	—	—
125V	—	—	50/50	50/50	—	—	—	—
NK AC 690V	20/20	—	10/10	20/20	20/20	—	25/20	—
I_{cu}/I_{cs}(sym) 450V	50/50	—	30/30	50/50	50/50	—	65/50	—
240V	85/85	—	50/50	85/85	85/85	—	100/75	—
DC 250V	—	—	—	—	—	—	—	—
■External dimensions, mm								
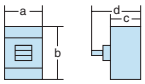 a	210 280	140 185	210 280	210 280	210 280	210 280	210 280	210 280
b	273	260	273	273	273	273	370	370
c	103	103	103	103	103	103	120	140
d	145	151	145	145	145	145	171	191
Weight (◉ marked standard type) kg	8.7 11.9	6.0 8.0	8.5 11.5	8.5 11.5	9.1 12.3	11.0 14.8	19.8 25.0	27.0 35.0
■Connections and Mountings								
Front-connected (FC) Terminal screws	—	—	—	—	—	—	—	—
With extension bars	◉	◉	◉	◉	◉	◉	◉	○
Rear-connected (RC) Flat bar studs	○	○	○	○	○	○	○	◉
Plug-in (PM) For switchboards High-performance (PMB)	○ ⑤1	—	○ ⑤1	○ ⑤1	○ ⑤1	—	—	—
Standard (PMC)	○ —	—	○ —	○ —	○ —	—	○	—
For distribution boards (PMD)	—	—	—	—	—	—	—	—
Flush-mounted (FP) With flat bar studs	○	○	○	○	○	○	○	○
Draw-out type (DR)	▲	—	▲	▲	▲	—	▲	○
TemPlug70 (PG)	○ —	—	—	—	—	—	—	—
DIN rail mount	—	—	—	—	—	—	—	—
■Accessories (optional) Symbol								
Internally mounted: Auxiliary switch A X	●	●	●	●	●	●	●	●
Alarm switch A L	●	●	●	●	●	●	●	●
Shunt trips S H	●	●	●	●	●	●	●	●
Undervoltage trips U V	●	●	●	●	●	●	●	●
Externally mounted: Motor operator M C	●	●	●	●	●	●	●	●
External operating handle Breaker-mounted H B	●	●	●	●	●	●	●	●
Door-mounted (variable depth) H P	●	●	●	●	●	●	●	●
Toggle extension H A	●	●	●	●	●	●	● ㉔	● ㉔
Mechanical interlock ⑨ Slide type M S	●	●	●	●	●	●	●	●
Rear-connected type M B	—	—	—	—	—	—	●	●
Link type M L	●	●	●	●	●	●	—	—
Wire type M W	●	●	●	●	●	●	●	●
Toggle holder H H	●	●	●	●	●	●	●	●
Toggle lock H L								
Terminal cover For front-connected C F	●	●	●	●	●	●	●	—
For rear-connected and plug-in C R	●	●	●	●	●	●	—	—
Terminal block for lead T F	●	●	●	●	●	●	●	●
Door flange D F	●	●	●	●	●	●	●	●
CE marking	Yes	Yes	Yes	Yes	Yes	Yes	Yes	Yes
Overcurrent trip mechanism	Electronic ⑯	Electronic	Thermal-magnetic (adjustable)	Thermal-magnetic (adjustable)	Electronic ⑯	Electronic ⑯	Electronic ⑯	Electronic ⑯
Colour of cover	Grey Blue	Grey Blue	Grey Blue	Grey Blue	Grey Blue	Grey Blue	Grey Blue	Grey Blue
Trip button (Colour)	Yes (Red)	Yes (Red)	Yes (Red)	Yes (Red)	Yes (Red)	Yes (Red)	Yes (Red)	Yes (Red)
Suitability for isolation	Yes	Yes	Yes	Yes	Yes	Yes	Yes	Yes
Reverse connection	Yes	Yes	Yes	Yes	Yes	Yes	Yes	Yes
Page of characteristics and outline dimensions	7-56	7-60	7-68	7-68	7-70	7-74	7-76	7-80

Notes:

◉ : Standard. This configuration used unless otherwise specified. ○ : Optional standard. Specify when ordering.
▲ : Semi-standard. ● : "yes" or "available". — : "no" or "not available".
① : DC is a special specification. When ordering, please specify DC.
⑨ : Mechanical interlocks cannot be applied to draw-out type (DR). ⑯ : Optional preferential alarm or ground fault trip function available on request.
㉔ : One is supplied with every five breakers. Please specify if more are required.
⑤1 : A safety lock function is provided.

Frame size (A)			2000		2500		3200
Type			XS2000NE		XS2500NE		XS3200NE
Number of poles			3	4	3	4	3
■Ratings							
Rated current, A			Adjustable		Adjustable		Adjustable
Calibrated at 40°C			I_{CT}=2000		I_{CT}=2500		I_{CT}=3200
45°C			1000	1600	1200	2000	1600 2800
			1200	1800	1400	2500	2000 3200
			1400	2000	1600		2500
					(40℃ only)		(40℃ only)
							㉑
Rated insulation voltage〔U_i〕 V			690		690		690
Rated impulse withstand voltage〔U_{imp}〕 kV			8		8		8
Rated short time withstand current〔I_{cw}〕 kA			42 (0.3sec.)		42 (0.3sec.)		38 (0.5sec.)
Utilization Category			B		B		B
■Rated breaking capacity, kA							
JIS C 8201-2-1 Ann.1 Ann.2	AC	690V	45/42		45/42		45/42
IEC 60947-2		500V	65/50		65/50		65/50
I_{cu}/I_{cs}(sym)		440V	85/65		85/65		85/65
		415V	85/65		85/65		85/65
		380V	100/75		100/75		100/75
		240V	125/94		125/94		125/94
	DC	250V	—		—		—
		125V	—		—		—
NK	AC	690V	—		—		—
I_{cu}/I_{cs}(sym)		450V	85/— ㉑		—		—
		240V	—		—		—
	DC	250V	—		—		—
■External dimensions, mm							
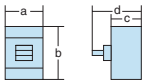		a	320	429	320	429	320
		b	450		450		450
		c	185		185		185
		d	245		245		245
Weight (◉ marked standard type) kg			54.0	67.0	64	78.2	65
■Connections and Mountings							
Front-connected (FC)	Terminal screws		—		—		—
	With extension bars		○		—		—
Rear-connected (RC)	Flat bar studs		◉		◉		◉
Plug-in (PM) For switchboards	High-performance (PMB)		—		—		—
	Standard (PMC)		—		—		—
For distribution boards (PMD)			—		—		—
Flush-mounted (FP)	With flat bar studs		○		○		○
Draw-out type (DR)			○		—		—
TemPlug70 (PG)			—		—		—
DIN rail mount			—		—		—
■Accessories (optional)		Symbol					
Internally mounted: Auxiliary switch		A X	●		●		●
Alarm switch		A L	●		●		●
Shunt trips		S H	●		●		●
Undervoltage trips		U V	● ⑥		● ⑥		● ⑥
Externally mounted: Toggle extension		H A	● ②		● ②		● ②
Mechanical interlock ⑨	Slide type	M S	●		●		●
	Rear-connected type	M B	●		●		●
	Link type	M L	—		—		—
	Wire type	MW	—		—		—
Terminal cover	For front-connected	C F	—		—		—
	For rear-connected and plug-in	C R	—		—		—
Terminal block for lead		T F	●		●		●
Door flange		D F	●		●		●
CE marking			Non		Non		Non
Overcurrent trip mechanism			Electronic ⑯		Electronic ⑯		Electronic ⑯
Colour of cover			Grey Blue		Grey Blue		Grey Blue
Trip button (Colour)			Yes (Red)		Yes (Red)		Yes (Red)
Suitability for isolation			Yes		Yes		Yes
Reverse connection			Yes		Yes		Yes
Page of characteristics and outline dimensions			7-82		7-84		7-86

Notes:
◉ : Standard. This configuration used unless otherwise specified. ○ : Optional standard. Specify when ordering.
● : "yes" or "available". — : "no" or "not available".
② : Supplied as standard. ⑥ : With AC UVT, the UVT controller is externally mounted. ⑨ : Mechanical interlocks cannot be applied to draw-out type (DR).
⑯ : Optional preferential alarm or ground fault trip function available on request. ㉑ : This is the value for 500V AC.
㊻ : Fixed depth, not adjustable. ㉑ : 3000A is also available as special.

3 High-fault level series

Frame size (A)			50			100			125		
Type			PS50-PF			S100-GF			S125-GF		
Number of poles			2	3	4	2	3	4	2	3	4
■Ratings											
Rated current, A			15			15	60		125		
Calibrated at 40°C			20			20	75				
45°C			30			30	100				
			40			40					
			50			50					
Rated insulation voltage〔U_i〕 V			800			690			690		
Rated impulse withstand voltage〔U_{imp}〕 kV			8			8			8		
Rated short time withstand current〔I_{cw}〕 kA			—			—			—		
Utilization Category			A			A			A		
■Rated breaking capacity, kA											
JIS C 8201-2-1 Ann.1 Ann.2	AC	690V	6/6			6/6			6/6		
IEC 60947-2		500V	30/22			25/22			25/22		
I_{cu}/I_{cs}(sym)		440V	50/35			50/25			50/25		
		415V	70/50			65/33			65/33		
		380V	70/50			65/33			65/33		
		240V	85/85			85/85			85/85		
	① DC	250V	40/40 ⑰ ㉗			40/40 ㉗			40/40 ㉗		
		125V	40/40 ⑰ ㉗			40/40 ㉗			40/40 ㉗		
NK	AC	690V	6/6			6/6			6/6		
I_{cu}/I_{cs}(sym)		450V	50/35			50/25			50/25		
		240V	85/85			85/85			85/85		
	① DC	250V	40/40 ⑰ ㉗			40/40 ㉗			40/40 ㉗		
■External dimensions, mm											
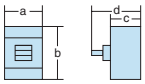		a	60	90	120	60	90	120	60	90	120
		b	130			155			155		
		c	68			68			68		
		d	95.5			92			92		
Weight (◉ marked standard type) kg			0.7	1.0	1.3	0.7	1.1	1.4	0.7	1.1	1.4
■Connections and Mountings											
Front-connected (FC)	Terminal screws		◉			◉			◉		
	With extension bars		○ ㊸			○ ㊸			○ ㊸		
Rear-connected (RC)	Flat bar studs		○			○			○		
Plug-in (PM) For switchboards	High-performance (PMB)		—	○ ㊿		○ ㊿			○ ㊿		
	Standard (PMC)		○		—	—	○	—	—	○	—
For distribution boards (PMD)			—	○	—	—			—		
Flush-mounted (FP)	With flat bar studs		○			○			○		
Draw-out type (DR)			—			—			—		
TemPlug70 (PG)			○		—	○		—	○		—
DIN rail mount			—	○ ⑪		—	○ ⑪		—	○ ⑪	
■Accessories (optional)		Symbol									
Internally mounted: Auxiliary switch		A X	●			●			●		
Internally mounted: Alarm switch		A L	●			●			●		
Internally mounted: Shunt trips		S H	●			●			●		
Internally mounted: Undervoltage trips		U V	●			●			●		
Externally mounted: Motor operator		M C	—	●		—	●		—	●	
Externally mounted: External operating handle	Breaker-mounted	H B	—	●		—	●		—	●	
	Door-mounted (variable depth)	H P	—	●		—	●		—	●	
Externally mounted: Toggle extension		H A	—			—			—		
Externally mounted: Mechanical interlock	Slide type	M S	—	●		—	●		—	●	
	Rear-connected type	M B	—			—			—		
	Link type	M L	—	●		—	●		—	●	
	Wire type	MW	—	●		—	●		—	●	
Externally mounted: Toggle holder		H H	●			●			●		
Externally mounted: Toggle lock		H L	●			●			●		
Externally mounted: Terminal cover	For front-connected	C F	●			●			●		
	For rear-connected and plug-in	C R	●			●			●		
Externally mounted: Terminal block for lead		T F	●			●			●		
Externally mounted: Door flange		D F	●			●			●		
CE marking			Yes			Yes			Yes		
Overcurrent trip mechanism			Thermal-magnetic			Thermal-magnetic			Thermal-magnetic		
Colour of cover			Grey Blue			Grey Blue			Grey Blue		
Trip button (Colour)			Yes (Red)			Yes (Red)			Yes (Red)		
Suitability for isolation			Yes			Yes			Yes		
Reverse connection			Yes			Yes			Yes		
Page of characteristics and outline dimensions			7-14			7-20			7-22		

Notes:

◉ : Standard. This configuration used unless otherwise specified. ○ : Optional standard. Specify when ordering.
● : "yes" or "available". — : "no" or "not available". ① : DC is a special specification. When ordering, please specify DC.
⑪ : Please order the DIN rail adapter separately. See page 6-152. ⑰ : See page 4-7 for the instantaneous trip value when using with DC.
㉗ : Applicable to only 2 poles breakers. ㊿ : A safety trip function is provided. ㊶ : A safety lock function is provided. ㊸ : For the extension bars, please place the order separately in parts.

2 Ratings and Specifications

Moulded Case Circuit Breakers

3 High-fault level series

Frame size (A)			100			125			100		125			
Type			PS125-PF						PS125-PE					
Number of poles			2	3	4	2	3	4	3	4	3	4		
■Ratings														
Rated current, A			15	60		125			Adjustable		Adjustable			
Calibrated at 40°C			20	75					I_n=100		I_n=125			
45°C			30	100					40	75	125			
			40						50	100				
			50						60					
									63	⑥①				
Rated insulation voltage〔U_i〕 V			800			800			800		800			
Rated impulse withstand voltage〔U_{imp}〕 kV			8			8			8		8			
Rated short time withstand current〔I_{cw}〕 kA			—			—			—		—			
Utilization Category			A			A			A		A			
■Rated breaking capacity, kA														
JIS C 8201-2-1 Ann.1 Ann.2	AC	690V	6/6			6/6			6/6		6/6			
IEC 60947-2		500V	30/22			30/22			30/22		30/22			
I_{cu}/I_{cs}(sym)		440V	50/35			50/35			50/35		50/35			
		415V	70/50			70/50			70/50		70/50			
		380V	70/50			70/50			70/50		70/50			
		240V	85/85			85/85			—		—			
	① DC	250V	40/40 ⑰ ㉗			40/40 ⑰ ㉗			—		—			
		125V	40/40 ⑰ ㉗			40/40 ⑰ ㉗			—		—			
NK	AC	690V	6/6			6/6			6/6		6/6			
I_{cu}/I_{cs}(sym)		450V	50/35			50/35			50/35		50/35			
		240V	85/85			85/85			85/85		85/85			
	① DC	250V	40/40 ㉗			40/40 ㉗			85/85		85/85			
■External dimensions, mm														
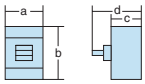		a	60	90	120	60	90	120	90	120	90	120		
		b	130			130			130		130			
		c	68			68			68		68			
		d	95.5			95.5			95.5		95.5			
Weight (◉ marked standard type) kg			0.7	1.0	1.3	0.7	1.0	1.3	1.0	1.3	1.0	1.3		
■Connections and Mountings														
Front-connected (FC)	Terminal screws		◉			◉			◉		◉			
	With extension bars		○ ⑤③			○ ⑤③			○ ⑤③		○ ⑤③			
Rear-connected (RC)	Flat bar studs		○			○			○		○			
Plug-in (PM) For switchboards	High-performance (PMB)		—	○ ⑤⓪		—	○ ⑤⓪		○ ⑤⓪		○ ⑤⓪			
	Standard (PMC)		○		—	○		—	○	—	○	—		
For distribution boards (PMD)			—	○	—	—	○	—	○	—	○	—		
Flush-mounted (FP)	With flat bar studs		○			○			○		○			
Draw-out type (DR)			—			—			—		—			
TemPlug70 (PG)			○		—	○		—	○	—	○	—		
DIN rail mount			—	○ ⑪		—	○ ⑪		○ ⑪		○ ⑪			
■Accessories (optional)		Symbol												
Internally mounted	Auxiliary switch	A X	●			●			●		●			
	Alarm switch	A L	●			●			●		●			
	Shunt trips	S H	●			●			●		●			
	Undervoltage trips	U V	●			●			●		●			
Externally mounted	Motor operator	M C	—	●		—	●		●		●			
	External operating handle: Breaker-mounted	H B	—	●		—	●		●		●			
	External operating handle: Door-mounted (variable depth)	H P	—	●		—	●		●		●			
	Toggle extension	H A	—			—			—		—			
	Mechanical interlock: Slide type	M S	—	●		—	●		●		●			
	Mechanical interlock: Rear-connected type	M B	—			—			—		—			
	Mechanical interlock: Link type	M L	—	●		—	●		●		●			
	Mechanical interlock: Wire type	M W	—	●		—	●		●		●			
	Toggle holder	H H	●			●			●		●			
	Toggle lock	H L	●			●			●		●			
	Terminal cover: For front-connected	C F	●			●			●		●			
	Terminal cover: For rear-connected and plug-in	C R	●			●			●		●			
	Terminal block for lead	T F	●			●			●		●			
	Door flange	D F	●			●			●		●			
CE marking			Yes			Yes			Yes		Yes			
Overcurrent trip mechanism			Thermal-magnetic			Thermal-magnetic			Electronic		Electronic			
Colour of cover			Grey Blue			Grey Blue			Grey Blue		Grey Blue			
Trip button (Colour)			Yes (Red)			Yes (Red)			Yes (Red)		Yes (Red)			
Suitability for isolation			Yes			Yes			Yes		Yes			
Reverse connection			Yes			Yes			Yes		Yes			
Page of characteristics and outline dimensions			7-14			7-14			7-18		7-18			

Notes:

◉ : Standard. This configuration used unless otherwise specified. ○ : Optional standard. Specify when ordering.

● : "yes" or "available". — : "no" or "not available".

① : DC is a special specification. When ordering, please specify DC. ⑪ : Please order the DIN rail adapter separately. See page 6-152.

⑰ : See page 4-7 for the instantaneous trip value when using with DC. ㉗ : Applicable to only 2 poles breakers.

⑤⓪ : A safety trip function is provided. ⑤③ : For the extension bars, please place the order separately in parts.

⑥① : Does not comply with Electrical Appliances and Materials Safety Act at rated current 100 A or less because it is an adjustable product. Also, it cannot be used at voltages other than rated operational voltage 380 V to 690 V AC. Please contact us for details.

3 High-fault level series

Frame size (A)	225			250			250		400		400	
Type	PS250-PF						PS250-PE		PS400-GF		PS400-GE	
Number of poles	2∗	3	4	2∗	3	4	3	4	3	4	3	4
■Ratings												
Rated current, A	125			250			Adjustable		225		Adjustable	
Calibrated at 40°C	150						I_n=250		250		I_n=250	I_n=400
45°C	175						125		300		125	175
	200						150		350		150	200
∗2 poles breakers use the terminals of both ends of 3 poles breakers.	225						175		400		175	225
							200				200	250
							225				225	300
							250				250	350
												400
Rated insulation voltage〔U_i〕 V	800			800			800		800		800	
Rated impulse withstand voltage〔U_{imp}〕 kV	8			8			8		8		8	
Rated short time withstand current〔I_{cw}〕 kA	—			—			—		—		5 (0.4sec.)	
Utilization Category	A			A			A		A		B	
■Rated breaking capacity, kA												
JIS C 8201-2-1 Ann.1 Ann.2 AC 690V	6/6			6/6			6/6		12/12		12/12	
IEC 60947-2 500V	35/30			35/30			35/30		50/50		50/50	
I_{cu}/I_{cs}(sym) 440V	50/40			50/40			50/40		65/65		65/65	
415V	70/50			70/50			70/50		70/70		70/70	
380V	70/50			70/50			70/50		70/70		70/70	
240V	85/85			85/85			85/85		100/100		100/100	
① DC 250V	40/40 ⑰ ⑧⑨			40/40 ⑰ ⑧⑨			—		50/50 ⑰		—	
125V	40/40 ⑰ ⑧⑨			40/40 ⑰ ⑧⑨			—		50/50 ⑰		—	
NK AC 690V	6/6			6/6			6/6		12/12		12/12	
I_{cu}/I_{cs}(sym) 450V	50/35			50/35			50/35		65/65		65/65	
240V	85/85			85/85			85/85		100/100		100/100	
① DC 250V	40/40 ⑰ ⑧⑨			40/40 ⑰ ⑧⑨			—		50/50 ⑰		—	
■External dimensions, mm												
a	105	105	140	105	105	140	105	140	140	185	140	185
b	165			165			165		260		260	
c	68			68			68		103		103	
d	95.5			95.5			95.5		151		151	
Weight (◉ marked standard type) kg	1.5	1.5	2.0	1.5	1.5	2.0	1.5	2.0	5.5	7.3	5.7	7.5
■Connections and Mountings												
Front-connected (FC) Terminal screws	◉			◉			◉		◉		◉	
With extension bars	○ ⑤③			○ ⑤③			○ ⑤③		○		○	
Rear-connected (RC) Flat bar studs	○			○			○		○		○	
Plug-in (PM) For switchboards High-performance (PMB)	○ ⑤⓪			○ ⑤⓪			○ ⑤⓪		○ ⑤⓪		○ ⑤⓪	
Standard (PMC)	○		—	○		—	○	—	○	—	○	—
For distribution boards (PMD)	—			—			—		—		—	
Flush-mounted (FP) With flat bar studs	○			○			○		○		○	
Draw-out type (DR)	▲			▲			▲		▲		▲	
TemPlug70 (PG)	—	○	—	—	○	—	○	—	○	—	○	—
DIN rail mount	—			—			—		—		—	
■Accessories (optional) Symbol												
Internally mounted: Auxiliary switch A X	●			●			●		●		●	
Alarm switch A L	●			●			●		●		●	
Shunt trips S H	●			●			●		●		●	
Undervoltage trips U V	●			●			●		●		●	
Externally mounted: Motor operator M C	●			●			●		●		●	
External operating handle: Breaker-mounted H B	●			●			●		●		●	
Door-mounted (variable depth) H P	●			●			●		●		●	
Toggle extension H A	—			—			—		●		●	
Mechanical interlock ⑨: Slide type M S	●			●			●		●		●	
Rear-connected type M B	—			—			—		—		—	
Link type M L	●			●			●		●		●	
Wire type M W	●			●			●		●		●	
Toggle holder H H	●			●			●		●		●	
Toggle lock H L	●			●			●					
Terminal cover: For front-connected C F	●			●			●		●		●	
For rear-connected and plug-in C R	●			●			●		●		●	
Terminal block for lead T F	●			●			●		●		●	
Door flange D F	●			●			●		●		●	
CE marking	Yes			Yes			Yes		Yes		Yes	
Overcurrent trip mechanism	Thermal-magnetic			Thermal-magnetic			Electronic		Thermal-magnetic (adjustable)		Electronic	
Colour of cover	Grey Blue			Grey Blue			Grey Blue		Grey Blue		Grey Blue	
Trip button (Colour)	Yes (Red)			Yes (Red)			Yes (Red)		Yes (Red)		Yes (Red)	
Suitability for isolation	Yes			Yes			Yes		Yes		Yes	
Reverse connection	Yes			Yes			Yes		Yes		Yes	
Page of characteristics and outline dimensions	7-32			7-32			7-34		7-44		7-46	

Notes:

◉ : Standard. This configuration used unless otherwise specified. ○ : Optional standard. Specify when ordering.
▲ : Semi-standard. ● : "yes" or "available". — : "no" or "not available".
① : DC is a special specification. When ordering, please specify DC.
⑨ : Mechanical interlocks cannot be applied to draw-out type (DR).
⑰ : See page 4-7 for the instantaneous trip value when using with DC. ⑤⓪ : A safety trip function is provided. ⑤③ : For the extension bars, please place the order separately in parts.
⑧⑨ : DC is a 2-pole product that uses both ends of a 3-pole circuit breaker.

Frame size (A)			600		630		800		800		800		800		1250	
Type			PS630-GF		PS630-GE		S800-RF		S800-RE		S800-PF		S800-PE		S1250-GE	
Number of poles			3	4	3	4	3	4	3	4	3	4	3	4	3	4
■Ratings																
Rated current, A			500		Adjustable		700		Adjustable		700		Adjustable		Adjustable	
Calibrated at 40°C			600		I_n=630		800		I_{CT}=800		800		I_{CT}=800		I_{CT}=1250	
45°C			⑱		250				350	600			350	600	500	1000
					300				400	700			400	700	600	1200
					350				450	800			450	800	700	1250
					400				500				500		800	
					500											
					600											
					630											
Rated insulation voltage〔U_i〕 V			800		800		690		690		690		690		690	
Rated impulse withstand voltage〔U_{imp}〕 kV			8		8		8		8		8		8		8	
Rated short time withstand current〔I_{cw}〕 kA			—		—		—		10(0.3sec.)		—		10(0.3sec.)		15(0.3sec.)	
Utilization Category			A		A		A		B		A		B		B	
■Rated breaking capacity, kA																
JIS C 8201-2-1 Ann.1 Ann.2	AC	690V	12/12		12/12		25/20		25/20		25/20		25/20		45/34	
IEC 60947-2		500V	50/50		50/50		45/34		45/34		45/34		45/34		65/50	
I_{cu}/I_{cs}(sym)		440V	65/65		65/65		65/50		65/50		85/50		85/50		85/65	
		415V	70/70		70/70		70/50		70/50		100/50		100/50		85/65	
		380V	70/70		70/70		70/50		70/50		100/50		100/50		100/75	
		240V	100/100		100/100		100/75		100/75		125/125		125/125		125/94	
	① DC	250V	50/50 ⑰		—		50/50		—		50/50		—		—	
		125V	50/50 ⑰		—		50/50		—		50/50		—		—	
NK	AC	690V	12/12		—		—		—		25/20		25/20		45/34	
I_{cu}/I_{cs}(sym)		450V	65/65		—		—		—		85/50		85/50		85/65	
		240V	100/100		—		—		—		125/125		125/125		125/94	
	① DC	250V	—		—		—		—		—		—		—	
■External dimensions, mm																
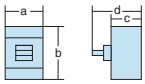		a	140	185	140	185	210	280	210	280	210	280	210	280	210	280
		b	260		260		273		273		273		273		370	
		c	103		103		103		103		103		103		120	
		d	151		151		145		145		145		145		171	
Weight (◉ marked standard type) kg			5.9	7.8	6.0	8.0	8.5	11.5	9.1	12.3	8.5	11.5	9.1	12.3	19.8	25.0
■Connections and Mountings																
Front-connected (FC)	Terminal screws		—		—		—		—		—		—		—	
	With extension bars		◉		◉		◉		◉		◉		◉		◉	
Rear-connected (RC)	Flat bar studs		○		○		○		○		○		○		○	
Plug-in (PM) For switchboards	High-performance (PMB)		○ ⑤⓪		—		○ ⑤①		○ ⑤①		○ ⑤①		○ ⑤①		—	
	Standard (PMC)		○	—	—		○	—	○	—	○	—	○	—	○	
For distribution boards (PMD)			—		—		—		—		—		—		—	
Flush-mounted (FP)	With flat bar studs		○		○		○		○		○		○		○	
Draw-out type (DR)			▲		—		▲		▲		▲		▲		▲	
TemPlug70 (PG)			○	—	—		—		—		—		—		—	
DIN rail mount			—		—		—		—		—		—		—	
■Accessories (optional)		Symbol														
Internally mounted	Auxiliary switch	A X	●		●		●		●		●		●		●	
	Alarm switch	A L	●		●		●		●		●		●		●	
	Shunt trips	S H	●		●		●		●		●		●		●	
	Undervoltage trips	U V	●		●		●		●		●		●		●	
Externally mounted	Motor operator	M C	●		●		●		●		●		●		●	
	External operating handle: Breaker-mounted	H B	●		●		●		●		●		●		●	
	External operating handle: Door-mounted (variable depth)	H P	●		●		●		●		●		●		●	
	Toggle extension	H A	●		●		●		●		●		●		● ㉔	
	Mechanical interlock ⑨: Slide type	M S	●		●		●		●		●		●		●	
	Mechanical interlock ⑨: Rear-connected type	M B	—		—		—		—		—		—		●	
	Mechanical interlock ⑨: Link type	M L	●		●		●		●		●		●		—	
	Mechanical interlock ⑨: Wire type	M W	●		●		●		●		●		●		●	
	Toggle holder	H H	●		●		●		●		●		●		●	
	Toggle lock	H L														
	Terminal cover: For front-connected	C F	●		●		●		●		●		●		●	
	Terminal cover: For rear-connected and plug-in	C R	●		●		●		●		●		●		—	
	Terminal block for lead	T F	●		●		●		●		●		●		●	
	Door flange	D F	●		●		●		●		●		●		●	
CE marking			Yes		Yes		Yes		Yes		Yes		Yes		Yes	
Overcurrent trip mechanism			Thermal-magnetic (adjustable)		Electronic		Thermal-magnetic (adjustable)		Electronic ⑯		Thermal-magnetic (adjustable)		Electronic ⑯		Electronic ⑯	
Colour of cover			Grey Blue		Grey Blue		Grey Blue		Grey Blue		Grey Blue		Grey Blue		Grey Blue	
Trip button (Colour)			Yes (Red)		Yes (Red)		Yes (Red)		Yes (Red)		Yes (Red)		Yes (Red)		Yes (Red)	
Suitability for isolation			Yes		Yes		Yes		Yes		Yes		Yes		Yes	
Reverse connection			Yes		Yes		Yes		Yes		Yes		Yes		Yes	
Page of characteristics and outline dimensions			7-58		7-60		7-68		7-70		7-68		7-70		7-76	

Notes:
◉ : Standard. This configuration used unless otherwise specified. ○ : Optional standard. Specify when ordering.
▲ : Semi-standard. ● : "yes" or "available". — : "no" or "not available".
① : DC is a special specification. When ordering, please specify DC.
⑨ : Mechanical interlocks cannot be applied to draw-out type (DR). ⑯ : Optional preferential alarm or ground fault trip function available on request.
⑰ : See page 4-7 for the instantaneous trip value when using with DC. ㉔ : One is supplied with every five breakers. Please specify if more are required.
⑤⓪ : A safety trip function is provided.
⑤① : A safety lock function is provided. ⑱ : Plug-in type (PM), draw-out type (DR), and TemPlug70 (PG) are only 500A.

4 Current limiting standard series

Frame size (A)	100		125		225		250		225		400		400		400	
Type	H100-NF		H125-NF		H225-NF		H250-NF		H225-NE		PH400-CF		PH400-CE		H400-NE	
Number of poles	3	4	3	4	3	4	3	4	3	4	3	4	3	4	3	4
■Ratings																
Rated current, A	15	60	125		125		250		(Adjustable)		225		Adjustable		Adjustable	
Calibrated at 40°C	20	75			150				125		250		I_n=250	I_n=400	I_{CT}=250	I_{CT}=400
45°C	30	100			175				150		300		125	175	125	175
	40				200				175		350		150	200	150	200
	50				225				200		400		175	225	175	225
									225				200	250	200	250
													225	300	225	300
													250	350		350
														400		400
Rated insulation voltage〔U_i〕 V	690		690		690		690		690		800		800		690	
Rated impulse withstand voltage〔U_{imp}〕 kV	8		8		8		8		8		8		8		8	
Rated short time withstand current〔I_{cw}〕 kA	—		—		—		—		—		—		5(0.4sec.)		5(0.3sec.)	
Utilization Category	A		A		A		A		A		A		B		B	
■Rated breaking capacity, kA																
JIS C 8201-2-1 Ann.1 Ann.2 AC 690V	20/15		20/15		20/15		20/15		20/15		12/12		12/12		35/35	
IEC 60947-2 500V	45/45		45/45		45/45		45/45		45/45		65/65		65/65		45/45	
I_{cu}/I_{cs}(sym) 440V	120/80		120/80		120/80		120/80		120/80		100/100		100/100		120/80	
415V	125/85		125/85		125/85		125/85		125/85		110/110		110/110		125/85	
380V	125/85		125/85		125/85		125/85		125/85		110/110		110/110		125/85	
240V	150/150		150/150		150/150		150/150		150/150		125/125		125/125		150/150	
① DC 250V	40/40		40/40		40/40		40/40		—		50/50 ⑰		—		—	
125V	40/40		40/40		40/40		40/40		—		50/50 ⑰		—		—	
NK AC 690V	20/15		20/15		20/15		—		—		12/12		12/12		35/35	
I_{cu}/I_{cs}(sym) 450V	120/80		120/80		120/80		—		—		100/100		100/100		120/80	
240V	150/150		150/150		150/150		—		—		125/125		125/125		150/150	
① DC 250V	—		—		—		—		—		50/50 ⑰		—		—	
■External dimensions, mm																
a	105	140	105	140	105	140	105	140	105	140	140	185	140	185	140	185
b	165		165		165		165		165		260		260		260	
c	103		103		103		103		103		103		103		140	
d	127		127		127		127		127		151		151		182	
Weight (◉ marked standard type) kg	2.4	3.2	2.4	3.2	2.4	3.2	2.4	3.2	2.5	3.3	5.5	7.3	5.7	7.5	7.1	9.4
■Connections and Mountings																
Front-connected (FC) Terminal screws	◉		◉		◉		◉		◉		◉		◉		◉	
With extension bars	○ ㊸		○ ㊸		○ ㊸		○ ㊸		○ ㊸		○		○		○	
Rear-connected (RC) Flat bar studs	○		○		○		○		○		○		○		○	
Plug-in (PM) For switchboards High-performance (PMB)	○ ㊶		○ ㊶		○ ㊶		—		—		○ ㊿		○ ㊿		○ ㊶	
Standard (PMC)	○	—	○	—	○	—	—		—		○	—	○	—	○	—
For distribution boards (PMD)	—		—		—		—		—		—		—		—	
lush-mounted (FP) With flat bar studs	○		○		○		○		○		○		○		○	
Draw-out type (DR)	—		—		—		—		—		▲		▲		—	
TemPlug70 (PG)	▲ ㊶	—	▲ ㊶	—	▲ ㊶	—	—		—		▲ ㊶	—	▲ ㊶	—	—	
DIN rail mount	—		—		—		—		—		—		—		—	
■Accessories (optional) Symbol																
Internally mounted: Auxiliary switch A X	●		●		●		●		●		●		●		●	
Alarm switch A L	●		●		●		●		●		●		●		●	
Shunt trips S H	●		●		●		●		●		●		●		●	
Undervoltage trips U V	●		●		●		●		●		●		●		●	
Externally mounted: Motor operator M C	●		●		●		●		●		●		●		●	
External operating handle Breaker-mounted H B	●		●		●		●		●		●		●		●	
Door-mounted (variable depth) H P	●		●		●		●		●		●		●		●	
Toggle extension H A	—		—		—		—		—		●		●		●	
Mechanical interlock ⑨ Slide type M S	●		●		●		●		●		●		●		●	
Rear-connected type M B	—		—		—		—		—		—		—		—	
Link type M L	●		●		●		●		●		●		●		●	
Wire type M W	●		●		●		●		●		●		●		●	
Toggle holder H H	●		●		●		●		●		●		●		●	
Toggle lock H L	●		●		●		●		●							
Terminal cover For front-connected C F	●		●		●		●		●		●		●		●	
For rear-connected and plug-in C R	●		●		●		●		●		●		●		●	
Terminal block for lead T F	●		●		●		●		●		●		●		●	
Door flange D F	●		●		●		●		●		●		●		●	
CE marking	Yes		Yes		Yes		Yes		Yes		Yes		Yes		Yes	
Overcurrent trip mechanism	Thermal-magnetic		Thermal-magnetic		Thermal-magnetic		Thermal-magnetic		Electronic ⑳		Thermal-magnetic (adjustable)		Electronic		Electronic ⑯	
Colour of cover	Grey Blue		Grey Blue		Grey Blue		Grey Blue		Grey Blue		Grey Blue		Grey Blue		Grey Blue	
Trip button (Colour)	Yes (Red)		Yes (Red)		Yes (Red)		Yes (Red)		Yes (Red)		Yes (Red)		Yes (Red)		Yes (Red)	
Suitability for isolation	Yes		Yes		Yes		Yes		Yes		Yes		Yes		Yes	
Reverse connection	Yes ㉒		Yes ㉒		Yes ㉒		Yes ㉒		Yes ㉒		Yes		Yes		Yes	
Page of characteristics and outline dimensions	7-24		7-26		7-36		7-38		7-40		7-48		7-50		7-52	

Notes:

◉ : Standard. This configuration used unless otherwise specified. ○ : Optional standard. Specify when ordering.
▲ : Semi-standard. ● : "yes" or "available". — : "no" or "not available". ① : DC is a special specification. When ordering, please specify DC.
⑨ : Mechanical interlocks cannot be applied to draw-out type (DR). ⑯ : Optional preferential alarm or ground fault trip function available on request.
⑰ : See page 4-7 for the instantaneous trip value when using with DC. ⑳ : Optional preferential trip alarm function available on request.
㊿ : A safety trip function is provided. ㊶ : A safety lock function is provided. ㊸ : For the extension bars, please place the order separately in parts.
㉒ : There are some limitations. See page 5-23 for details. ㊶ : They cannot be applied to circuits with a short circuit breaking current exceeding 85 kA.

4 Current limiting standard series

Frame size (A)	600		630		630		800		1000		1200			
Type	**PH630-CF**		**PH630-CE**		**H630-NE**		**H800-NE**		**TL-1000NE**		**TL-1200NE**			
Number of poles	3	4	3	4	3	4	3	4	3	4	3	4		
■Ratings														
Rated current, A	500		Adjustable		Adjustable		Adjustable		Adjustable		Adjustable			
Calibrated at 40°C	600		I_n=630		I_{CT}=630		I_{CT}=800		I_{CT}=1000		I_{CT}=1250			
45°C	㉘		250		250		350	600	500	800	600	1000		
			300		300		400	700	600	900	700	1200		
			350		350		450	800	700	1000	800			
			400		400		500							
			500		500									
			600		600									
			630		630									
Rated insulation voltage〔U_i〕 V	800		800		690		690		690		690			
Rated impulse withstand voltage〔U_{imp}〕 kV	8		8		8		8		8		8			
Rated short time withstand current〔I_{cw}〕 kA	—		—		10(0.3sec.)		10(0.3sec.)		15(0.3sec.)		15(0.3sec.)			
Utilization Category	A		A		B		B		B		B			
■Rated breaking capacity, kA														
JIS C 8201-2-1 Ann.1 Ann.2 ㊾ AC 690V	12/12		12/12		25/20		25/20		45/34		45/34			
IEC 60947-2 500V	65/65		65/65		45/34		45/34		75/57		75/57			
I_{cu}/I_{cs}(sym) 440V	100/100		100/100		125/94		125/94		125/65		125/65			
415V	110/110		110/110		125/94		125/94		125/65		125/65			
380V	110/110		110/110		125/94		125/94		125/65		125/65			
240V	125/125		125/125		150/150		150/150		150/113		150/113			
① DC 250V	50/50 ⑰		—		—		—		—		—			
125V	50/50 ⑰		—		—		—		—		—			
NK AC 690V	12/12		—		25/20		25/20		—		—			
I_{cu}/I_{cs}(sym) 450V	100/100		—		125/94		125/94		125/— ㉓		125/— ㉓			
240V	125/125		—		150/150		150/150		—		—			
① DC 250V	—		—		—		—		—		—			
■External dimensions, mm														
a	140	185	140	185	210	280	210	280	210	280	210	280		
b	260		260		273		273		370		370			
c	103		103		140		140		140		140			
d	151		151		182		182		191		191			
Weight (◉ marked standard type) kg	5.9	7.8	6.0	8.0	13.5	19.6	14.3	20.3	26.0	33.7	26.0	33.7		
■Connections and Mountings														
Front-connected (FC) Terminal screws	—		—		—		—		—		—			
With extension bars	◉		◉		◉		◉		◉		◉			
Rear-connected (RC) Flat bar studs	○		○		○		○		○		○			
Plug-in (PM) For switchboards High-performance (PMB)	○ ㊿		—		○ ㊿		○ ㊿		—		—			
Standard (PMC)	○	—	—		○	—	○	—	○		○			
For distribution boards (PMD)	—		—		—		—		—		—			
lush-mounted (FP) With flat bar studs	○		○		○		○		○		○			
Draw-out type (DR)	▲		—		—		—		▲		▲			
TemPlug70 (PG)	▲ ㊽	—	—		—		—		—		—			
DIN rail mount	—		—		—		—		—		—			
■Accessories (optional) Symbol														
Internally mounted: Auxiliary switch A X	●		●		●		●		●		●			
Alarm switch A L	●		●		●		●		●		●			
Shunt trips S H	●		●		●		●		●		●			
Undervoltage trips U V	●		●		●		●		● ⑥		● ⑥			
Externally mounted: Motor operator M C	●		●		●		●		●		●			
External operating handle: Breaker-mounted H B	●		●		●		●		●		●			
Door-mounted (variable depth) H P	●		●		●		●		●		●			
Toggle extension H A	●		●		●		●		● ㉔		● ㉔			
Mechanical interlock ⑨: Slide type M S	●		●		●		●		●		●			
Rear-connected type M B	—		—		—		—		●		●			
Link type M L	●		●		●		●		—		—			
Wire type M W	●		●		●		●		—		—			
Toggle holder H H	●		●		●		●		●		●			
Toggle lock H L														
Terminal cover: For front-connected C F	●		●		●		●		—		—			
For rear-connected and plug-in C R	●		●		●		●		—		—			
Terminal block for lead T F	●		●		●		●		●		●			
Door flange D F	●		●		●		●		●		●			
CE marking	Yes		Yes		Yes		Yes		Non		Non			
Overcurrent trip mechanism	Thermal-magnetic (adjustable)		Electronic		Electronic ⑯		Electronic ⑯		Electronic ⑯		Electronic ⑯			
Colour of cover	Grey Blue		Grey Blue		Grey Blue		Grey Blue		Black		Black			
Trip button (Colour)	Yes (Red)		Yes (Red)		Yes (Red)		Yes (Red)		Yes (Brown)		Yes (Brown)			
Suitability for isolation	Yes		Yes		Yes		Yes		Non		Non			
Reverse connection	Yes		Yes		Yes		Yes		Yes		Yes			
Page of characteristics and outline dimensions	7-62		7-64		7-66		7-72		7-78		7-78			

Notes:
◉ : Standard. This configuration used unless otherwise specified. ○ : Optional standard. Specify when ordering.
▲ : Semi-standard. ● : "yes" or "available". — : "no" or "not available". ① : DC is a special specification. When ordering, please specify DC.
⑥ : With AC UVT, the UVT controller is externally mounted. ⑨ : Mechanical interlocks cannot be applied to draw-out type (DR).
⑯ : Optional preferential alarm or ground fault trip function available on request. ⑰ : See page 4-7 for the instantaneous trip value when using with DC.
㉓ : This is the value for 460V AC. ㉔ : One is supplied with every five breakers. Please specify if more are required. ㊿ : A safety trip function is provided.
㊶ : A safety lock function is provided. ㊾ : TL-1000NE and TL-1200NE are JIS C 8201-2-1 Ann.2 compliant. ㉘ : Plug-in type (PM), draw-out type (DR), and TemPlug70 (PG) are only 500A.
㊽ : They cannot be applied to circuits with a short circuit breaking current exceeding 85kA.

5 Current limiting High-fault level series

Frame size (A)	100		125		225		250		400		630		800	
Type	L100-NF		L125-NF		L225-NF		L250-NF		L400-NE		L630-NE		L800-NE	
Number of poles	3	4	3	4	3	4	3	4	3	4	3	4	3	4
■Ratings														
Rated current, A	15	60	125		125		250		Adjustable		Adjustable		Adjustable	
Calibrated at 40°C	20	75			150				I_{CT}=250	I_{CT}=400	I_{CT}=630		I_{CT}=800	
45°C	30	100			175				125	175	250		350	600
	40				200				150	200	300		400	700
	50				225				175	225	350		450	800
									200	250	400		500	
									225	300	500			
										350	600			
										400	630			
Rated insulation voltage〔U_i〕 V	690		690		690		690		690		690		690	
Rated impulse withstand voltage〔U_{imp}〕 kV	8		8		8		8		8		8		8	
Rated short time withstand current〔I_{cw}〕 kA	—		—		—		—		5 (0.3sec.)		10 (0.3sec.)		10 (0.3sec.)	
Utilization Category	A		A		A		A		B		B		B	
■Rated breaking capacity, kA														
JIS C 8201-2-1 Ann.1 Ann.2 AC 690V	25/20		25/20		25/20		25/20		50/50		25/20		25/20	
IEC 60947-2 500V	65/65		65/65		65/65		65/65		65/65		45/34		45/34	
I_{cu}/I_{cs}(sym) 440V	180/135		180/135		180/135		180/135		180/135		180/135		180/135	
415V	200/150		200/150		200/150		200/150		200/150		200/150		200/150	
380V	200/150		200/150		200/150		200/150		200/150		200/150		200/150	
240V	200/150		200/150		200/150		200/150		200/150		200/150		200/150	
① DC 250V	40/40		40/40		40/40		40/40		—		—		—	
125V	40/40		40/40		40/40		40/40		—		—		—	
NK AC 690V	25/20		25/20		25/20		—		50/50		25/20		25/20	
I_{cu}/I_{cs}(sym) 450V	180/135		180/135		180/135		—		180/135		180/135		180/135	
240V	200/150 ㉛		200/150 ㉛		200/150 ㉛		—		200/150 ㉛		200/150		200/150	
① DC 250V	—		—		—		—		—		—		—	
■External dimensions, mm														
a	105	140	105	140	105	140	105	140	140	185	210	280	210	280
b	165		165		165		165		260		273		273	
c	103		103		103		103		140		140		140	
d	127		127		127		127		182		182		182	
Weight (◉ marked standard type) kg	2.4	3.2	2.4	3.2	2.4	3.2	2.4	3.2	7.1	9.4	13.5	19.6	14.3	20.3
■Connections and Mountings														
Front-connected (FC) Terminal screws	◉		◉		◉		◉		◉		—		—	
With extension bars	○ ㊸		○ ㊸		○ ㊸		○ ㊸		○		◉		◉	
Rear-connected (RC) Flat bar studs	○		○		○		○		○		○		○	
Plug-in (PM) For switchboards High-performance (PMB)	○ ㊶		○ ㊶		○ ㊶		—		○ ㊶		○ ㊶		○ ㊶	
Standard (PMC)	○	—	○	—	○	—	—		○	—	○	—	○	—
For distribution boards (PMD)	—		—		—		—		—		—		—	
Flush-mounted (FP) With flat bar studs	○		○		○		○		○		○		○	
Draw-out type (DR)	—		—		—		—		—		—		—	
TemPlug70 (PG)	—		—		—		—		—		—		—	
DIN rail mount	—		—		—		—		—		—		—	
■Accessories (optional) Symbol														
Internally mounted: Auxiliary switch A X	●		●		●		●		●		●		●	
Alarm switch A L	●		●		●		●		●		●		●	
Shunt trips S H	●		●		●		●		●		●		●	
Undervoltage trips U V	●		●		●		●		●		●		●	
Externally mounted: Motor operator M C	●		●		●		●		●		●		●	
External operating handle: Breaker-mounted H B	●		●		●		●		●		●		●	
Door-mounted (variable depth) H P	●		●		●		●		●		●		●	
Toggle extension H A	—		—		—		—		●		●		●	
Mechanical interlock: Slide type M S	●		●		●		●		●		●		●	
Rear-connected type M B	—		—		—		—		—		—		—	
Link type M L	●		●		●		●		●		●		●	
Wire type M W	●		●		●		●		●		●		●	
Toggle holder H H	●		●		●		●		●		●		●	
Toggle lock H L	●		●		●		●							
Terminal cover: For front-connected C F	●		●		●		●		●		●		●	
For rear-connected and plug-in C R	●		●		●		●		●		●		●	
Terminal block for lead T F	●		●		●		●		●		●		●	
Door flange D F	●		●		●		●		●		●		●	
CE marking	Yes		Yes		Yes		Yes		Yes		Yes		Yes	
Overcurrent trip mechanism	Thermal-magnetic		Thermal-magnetic		Thermal-magnetic		Thermal-magnetic		Electronic ⑯		Electronic ⑯		Electronic ⑯	
Colour of cover	Grey Blue		Grey Blue		Grey Blue		Grey Blue		Grey Blue		Grey Blue		Grey Blue	
Trip button (Colour)	Yes (Red)		Yes (Red)		Yes (Red)		Yes (Red)		Yes (Red)		Yes (Red)		Yes (Red)	
Suitability for isolation	Yes		Yes		Yes		Yes		Yes		Yes		Yes	
Reverse connection	Yes ㉒		Yes ㉒		Yes ㉒		Yes ㉒		Yes		Yes		Yes	
Page of characteristics and outline dimensions	7-24		7-26		7-36		7-38		7-52		7-66		7-72	

Notes:

◉ : Standard. This configuration used unless otherwise specified. ○ : Optional standard. Specify when ordering.
▲ : Semi-standard. ● : "yes" or "available". — : "no" or "not available".
① : DC is a special specification. When ordering, please specify DC.
⑯ : Optional preferential alarm or ground fault trip function available on request.
㉛ : Also applicable to 415V AC. ㊶ : A safety lock function is provided. ㊸ : For the extension bars, please place the order separately in parts.
㉒ : There are some limitations. See page 5-23 for details.

6 Moulded Case Circuit Breakers for motor protection

Frame size (A)	30	30	50	50	100	225		
Type	**E30-NM**	**S30-NM**	**E50-NM**	**S50-NM**	**E100-NM**	**S250-SM**		
Number of poles	3	3	3	3	3	3		
■Ratings								
Motor rated capacity (kW) and breaker rated current (A)								
Calibrated at 40°C								
45°C								

(A)	(kW) 200/220V	(kW) 400/440V
1.4	0.2	0.4
2.6	0.4	—
4	0.75	1.5
8	1.5	3.7
10	2.2	—
16	3.7	7.5
24	5.5	11
32	7.5	15
(40℃ only)		

(A)	(kW) 200/220V	(kW) 400/440V
0.7	—	0.2
1.4	0.2	0.4
2	—	0.75
2.6	0.4	—
4	0.75	1.5
5	—	2.2
8	1.5	3.7
10	2.2	—
12	—	5.5
16	3.7	7.5
24	5.5	11
32	7.5	15
(40℃ only)		

(A)	(kW) 200/220V	(kW) 400/440V
24	5.5	11
32	7.5	15
40	—	18.5
45	11	22
(40℃ only)		

(A)	(kW) 200/220V	(kW) 400/440V
10	2.2	—
12	—	5.5
16	3.7	7.5
24	5.5	11
32	7.5	15
40	—	18.5
45	11	22
(40℃ only)		

(A)	(kW) 200/220V	(kW) 400/440V
60	15	30
75	18.5	37
90	22	45
(40℃ only)		

(A)	(kW) 200/220V	(kW) 400/440V
125	30	—
150	37	75
175	45	90
225	55	110

Note: Select an appropriate one depending on the total load current of the motor operator.

Rated insulation voltage 〔U_i〕 V		500	690	690	690	690	690		
Rated impulse withstand voltage 〔U_{imp}〕 kV		6	6	6	6	6	8		
■Rated breaking capacity, kA									
JIS C 8201-2-1 Ann.1 Ann.2 ㊺㊻	AC 440V	1.5/1	2.5/2	2.5/2	10/5	10/5	30/15		
IEC 60947-2	415V	1.5/1	2.5/2	2.5/2	10/5	10/5	40/20		
I_{cu}/I_{cs}(sym)	380V	1.5/1	2.5/2	2.5/2	10/5	10/5	40/20		
	240V	2.5/2 ㊾	5/3 ㊾	5/3 ㊾	25/13 ㊾	25/13 ㊾	85/43		
■External dimensions, mm									
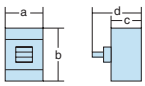	a	75	75	75	75	75	105		
	b	100	100	100	100	100	165		
	c	60	60	60	60	60	68		
	d	84	84	84	84	84	95		
Weight (◉ marked standard type) kg		0.5	0.5	0.5	0.5	0.5	1.5		
■Connections and Mountings									
Front-connected (FC)	Terminal screws	◉ ㊺	◉ ㊺	◉ ㊺	◉ ㊺	◉	◉		
	With extension bars	○ ㊸	○ ㊸	○ ㊸	○ ㊸	○ ㊸	○ ㊸		
Rear-connected (RC)	Flat bar studs	○	○	○	○	○	○		
Plug-in (PM) For switchboards	High-performance (PMB)	—	—	—	—	—	—		
	Standard (PMC)	—	—	—	—	—	—		
For distribution boards	(PMC)	—	—	—	—	—	—		
	(PMD)	—	—	—	—	—	—		
Flush-mounted (FP)	With flat bar studs	○	○	○	○	○	○		
Draw-out type (DR)		—	—	—	—	—	—		
TemPlug70 (PG)		—	—	—	—	—	○		
DIN rail mount		◉	◉	◉	◉	◉	—		
■Accessories (optional)	**Symbol**								
Internally mounted: Auxiliary switch	A X	●	●	●	●	●	●		
Internally mounted: Alarm switch	A L	●	●	●	●	●	●		
Internally mounted: Shunt trips	S H	●	●	●	●	●	●		
Internally mounted: Undervoltage trips	U V	● ㊽	● ㊽	● ㊽	● ㊽	● ㊽	●		
Externally mounted: Motor operator	M C	—	—	—	—	—	●		
External operating handle: Breaker-mounted	H B	△	△	△	△	△	●		
External operating handle: Door-mounted (variable depth)	H P	△	△	△	△	△	●		
Toggle extension	H A	—	—	—	—	—	—		
Mechanical interlock: Slide type	M S	●	●	●	●	●	●		
Mechanical interlock: Rear-connected type	M B	—	—	—	—	—	—		
Mechanical interlock: Link type	M L	—	—	—	—	—	●		
Mechanical interlock: Wire type	M W	—	—	—	—	—	●		
Toggle holder	H H	—	—	—	—	—	●		
Toggle lock	H L	●	●	●	●	●	●		
Terminal cover: For front-connected	C F	●	●	●	●	●	●		
Terminal cover: For rear-connected and plug-in	C R	● ②	● ②	● ②	● ②	● ②	●		
Terminal block for lead	T F	●	●	●	●	●	●		
Door flange	D F	—	—	—	—	—	●		
CE marking		Yes	Yes	Yes	Yes	Yes	Yes		
Overcurrent trip mechanism		Hydraulic-magnetic type	Hydraulic-magnetic type	Hydraulic-magnetic type	Hydraulic-magnetic type	Hydraulic-magnetic type	Thermal-magnetic		
Colour of cover		Light Grey	Light Grey	Light Grey	Light Grey	Light Grey	Grey Blue		
Trip button (Colour)		Yes (Red)	Yes (Red)	Yes (Red)	Yes (Red)	Yes (Red)	Yes (Red)		
Suitability for isolation		Yes	Yes	Yes	Yes	Yes	Yes		
Reverse connection		Yes ㉒	Yes	Yes	Yes ㉒	Yes ㉒	Yes		
Page of characteristics and outline dimensions		7-88	7-88	7-88	7-88	7-90	7-92		

Notes:
◉ : Standard. This configuration used unless otherwise specified. ○ : Optional standard. Specify when ordering.
● : "yes" or "available". — : "no" or "not available". △ : Custom-built product. Please contact us for details.
② : Supplied as standard. ⑪ : Please order the DIN rail adapter separately. See page 6-152. ㊺ : A wire clamping terminal is provided.
㊸ : For the extension bars, please place the order separately in parts.
㊽ : It is mounted on the side of the circuit breaker. In the case of Flush-mounted type (FP), it cannot be installed.
㊾ : This is the value for 230V AC. ㉒ : There are some limitations. See page 5-23 for details.

7 Switch-disconnectors

Frame size (A)		30		50		100		125		100		125		100		125	
Type		PE30-NN		PE50-NN		PE125-NN				S125-SN				PS125-NN			
Number of poles		2	3	2	3	2	3	2	3	3	4	3	4	3	4	3	4
■Ratings																	
Rated current, A		30		50		100		125		100		125		100		125	
Rated insulation voltage〔U_i〕 V		690		690		690		690		690		690		800		800	
Rated operational voltage V	AC	415		500		500		500		690		690		690		690	
	DC	—		250 ㉗		250 ㉗		250 ㉗		250		250		250		250	
Rated impulse withstand voltage〔U_{imp}〕 kV		8		8		8		8		8		8		8		8	
Rated short circuit making capacity〔I_{cm}〕 kA peak		1.5		1.5		2.13		2.13		2.8		2.8		2.8		2.8	
Rated short time withstand current〔I_{cw}〕 kA		1 (1sec.)		1 (1sec.)		1.5 (0.3sec.)		1.5 (0.3sec.)		2 (0.3sec.)		2 (0.3sec.)		2 (1sec.)		2 (1sec.)	
■Performance																	
Utilization category	AC	AC-23A		AC-23A		AC-23A		AC-23A		AC-23A		AC-23A		AC-23A		AC-23A	
JIS C 8201-3 IEC 60947-3	DC	—		DC-22A		DC-22A		DC-22A		DC-22A		DC-22A		DC-22A		DC-22A	
Upstream breaker (OCPD) ㉙		PE30-NF		PE50-NF		PE125-NF		PE125-NF		S125-SF		S125-SF		PS125-NF		PS125-NF	
■External dimensions, mm																	
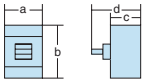	a	50	75	50	75	50	75	50	75	75	100	75	100	90	120	90	120
	b	130		130		130		130		130		130		130		130	
	c	68		68		68		68		68		68		68		68	
	d	90		90		90		90		95		95		95.5		95.5	
Weight (◉ marked standard type) kg		0.5	0.7	0.5	0.7	0.5	0.7	0.5	0.7	0.7	0.9	0.7	0.9	1.0	1.3	1.0	1.3
■Connections and Mountings																	
Front-connected (FC) Terminal screws		◉ ㊺		◉ ㊺		◉		◉		◉		◉		◉		◉	
With extension bars		○ ㊸		○ ㊸		○ ㊸		○ ㊸		○ ㊸		○ ㊸		○ ㊸		○ ㊸	
Rear-connected (RC) Flat bar studs		○		○		○		○		○		○		○		○	
Plug-in (PM) For switchboards High-performance (PMB)		—		—		—		—		—		—		○ ㊿		○ ㊿	
Standard (PMC)		—	○	—	○	—	○	—	○	○	—	○	—	○	—	○	—
For distribution boards (PMD)		○		○		○		○		○	—	○	—	○	—	○	—
Flush-mounted (FP) With flat bar studs		○		○		○		○		○	—	○	—	○		○	
Draw-out type (DR)		—		—		—		—		—		—		—		—	
TemPlug70 (PG)		—		—		—		—		○	—	○	—	○	—	○	—
DIN rail mount		—	○ ⑪	—	○ ⑪	—	○ ⑪	—	○ ⑪	○ ⑪		○ ⑪		○ ⑪		○ ⑪	
■Accessories (optional)	Symbol																
Internally mounted: Auxiliary switch	A X	●		●		●		●		●		●		●		●	
Internally mounted: Alarm switch	A L	●		●		●		●		●		●		●		●	
Internally mounted: Shunt trips	S H	●		●		●		●		●		●		●		●	
Internally mounted: Undervoltage trips	U V	●		●		●		●		●		●		●		●	
Externally mounted: Motor operator	M C	—		—		—		—		—		—		●		●	
Externally mounted: External operating handle, Breaker-mounted	H B	—	●	—	●	—	●	—	●	●		●		●		●	
Externally mounted: External operating handle, Door-mounted (variable depth)	H P	—	●	—	●	—	●	—	●	●		●		●		●	
Externally mounted: Toggle extension	H A	—		—		—		—		—		—		—		—	
Externally mounted: Mechanical interlock, Slide type	M S	—	●	—	●	—	●	—	●	●		●		●		●	
Externally mounted: Mechanical interlock, Rear-connected type	M B	—		—		—		—		—		—		—		—	
Externally mounted: Mechanical interlock, Link type	M L	—		—		—		—		—		—		●		●	
Externally mounted: Mechanical interlock, Wire type	MW	—		—		—		—		—		—		●		●	
Externally mounted: Toggle holder	H H	●		●		●		●		●		●		●		●	
Externally mounted: Toggle lock	H L	●		●		●		●		●		●		●		●	
Externally mounted: Terminal cover, For front-connected	C F	●		●		●		●		●		●		●		●	
Externally mounted: Terminal cover, For rear-connected and plug-in	C R	●		●		●		●		●		●		●		●	
Externally mounted: Terminal block for lead	T F	●		●		●		●		●		●		●		●	
Externally mounted: Door flange	D F	●		●		●		●		●		●		●		●	
CE marking		Yes		Yes		Yes		Yes		Yes		Yes		Yes		Yes	
Colour of cover		Grey Blue		Grey Blue		Grey Blue		Grey Blue		Grey Blue		Grey Blue		Grey Blue		Grey Blue	
Trip button (Colour)		Yes (Red)		Yes (Red)		Yes (Red)		Yes (Red)		Yes (Red)		Yes (Red)		Yes (Red)		Yes (Red)	
Suitability for isolation		Yes		Yes		Yes		Yes		Yes		Yes		Yes		Yes	
Reverse connection		Yes		Yes		Yes		Yes		Yes		Yes		Yes		Yes	
Page of characteristics and outline dimensions		7-94		7-94		7-96		7-96		7-98		7-98		7-100		7-100	

Notes:

◉ : Standard. This configuration used unless otherwise specified. ○ : Optional standard. Specify when ordering.
● : "yes" or "available". — : "no" or "not available".
⑪ : Please order the DIN rail adapter separately. See page 6-152. ㉗ : Applicable to only 2 poles breakers.
㉙ : Please use upstream breaker for overcurrent protection. Rated conditional short-circuit current [Icc] will be the same as Rated short-circuit breaking capacity of upstream breaker.
㊺ : A wire clamping terminal is provided.
㊿ : A safety trip function is provided. ㊸ : For the extension bars, please place the order separately in parts.

7 Switch-disconnectors

Frame size (A)			225		250		225		250		400		600			
Type			**S250-SN**				**PS250-NN**				**PS400-NN**		**PS630-NN**			
Number of poles			3	4	3	4	3	4	3	4	3	4	3	4		
■Ratings																
Rated current, A			225		250		225		250		400		600 ⑲			
Rated insulation voltage〔U_i〕 V			690		690		800		800		800		800			
Rated operational voltage V		AC	690		690		690		690		690		690			
		DC	250		250		250		250		250		250			
Rated impulse withstand voltage〔U_{imp}〕 kV			8		8		8		8		8		8			
Rated short circuit making capacity〔I_{cm}〕 kA peak			6		6		5		5		7.6		13			
Rated short time withstand current〔I_{cw}〕 kA			3 (0.3sec.)		3 (0.3sec.)		3.6 (1sec.)		3.6 (1sec.)		5 (1sec.)		7.6 (1sec.)			
■Performance																
Utilization category JIS C 8201-3 IEC 60947-3		AC	AC-23A		AC-23A		AC-23A		AC-23A		AC-23A		AC-23A (500A) AC-22A (600A)			
		DC	DC-22A		DC-22A		DC-22A		DC-22A		DC-22A		DC-22A			
Upstream breaker (OCPD) ㉙			**S250-SF**		**S250-SF**		**PS250-PF**		**PS250-PF**		**PS400-NF**		**PS630-NF**			
■External dimensions, mm																
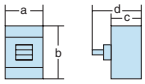		a	105	140	105	140	105	140	105	140	140	185	140	185		
		b	165		165		165		165		260		260			
		c	68		68		68		68		103		103			
		d	95		95		95.5		95.5		151		151			
Weight (◉ marked standard type) kg			1.5	1.9	1.5	1.9	1.5	2.0	1.5	2.0	5.4	7.2	5.7	7.7		
■Connections and Mountings																
Front-connected (FC)	Terminal screws		◉		◉		◉		◉		◉		—			
	With extension bars		○ ㊸		○ ㊸		○ ㊸		○ ㊸		○		◉			
Rear-connected (RC)	Flat bar studs		○		○		○		○		○		○			
Plug-in (PM) For switchboards	High-performance (PMB)		—		—		○ ㊿		○ ㊿		○ ㊿		○ ㊿			
	Standard (PMC)		○		○		○	—	○	—	○	—	○	—		
For distribution boards (PMD)			—		—		—		—		—		—			
Flush-mounted (FP)	With flat bar studs		○		○		○		○		○		○			
Draw-out type (DR)			—		—		▲		▲		▲		▲			
TemPlug70 (PG)			○	—	○	—	○	—	○	—	○	—	○	—		
DIN rail mount			—		—		—		—		—		—			
■Accessories (optional)		Symbol														
Internally mounted	Auxiliary switch	A X	●		●		●		●		●		●			
	Alarm switch	A L	●		●		●		●		●		●			
	Shunt trips	S H	●		●		●		●		●		●			
	Undervoltage trips	U V	●		●		●		●		●		●			
Externally mounted	Motor operator	M C	●		●		●		●		●		●			
	External operating handle: Breaker-mounted	H B	●		●		●		●		●		●			
	External operating handle: Door-mounted (variable depth)	H P	●		●		●		●		●		●			
	Toggle extension	H A	—		—		—		—		●		●			
	Mechanical interlock ⑨: Slide type	M S	●		●		●		●		●		●			
	Mechanical interlock ⑨: Rear-connected type	M B	—		—		—		—		—		—			
	Mechanical interlock ⑨: Link type	M L	●		●		●		●		●		●			
	Mechanical interlock ⑨: Wire type	M W	●		●		●		●		●		●			
	Toggle holder	H H	●		●		●		●		●		●			
	Toggle lock	H L	●		●		●		●		●		●			
	Terminal cover: For front-connected	C F	●		●		●		●		●		●			
	Terminal cover: For rear-connected and plug-in	C R	●		●		●		●		●		●			
	Terminal block for lead	T F	●		●		●		●		●		●			
	Door flange	D F	●		●		●		●		●		●			
CE marking			Yes		Yes		Yes		Yes		Yes		Yes			
Colour of cover			Grey Blue		Grey Blue		Grey Blue		Grey Blue		Grey Blue		Grey Blue			
Trip button (Colour)			Yes (Red)		Yes (Red)		Yes (Red)		Yes (Red)		Yes (Red)		Yes (Red)			
Suitability for isolation			Yes		Yes		Yes		Yes		Yes		Yes			
Reverse connection			Yes		Yes		Yes		Yes		Yes		Yes			
Page of characteristics and outline dimensions			7-102		7-102		7-104		7-104		7-106		7-108			

Notes:

◉ : Standard. This configuration used unless otherwise specified. ○ : Optional standard. Specify when ordering.
▲ : Semi-standard. ● : "yes" or "available". — : "no" or "not available".
⑨ : Mechanical interlocks cannot be applied to draw-out type (DR).
㉙ : Please use upstream breaker for overcurrent protection. Rated conditional short-circuit current [Icc] will be the same as Rated short-circuit breaking capacity of upstream breaker.
㊿ : A safety trip function is provided. ㊸ : For the extension bars, please place the order separately in parts.
⑲ : Plug-in type (PM), draw-out type (DR), and TemPlug70 (PG) are only rated current 500A.

7 Switch-disconnectors

Frame size (A)			600		630		800		1000		1250		1600				
Type			**S630-GN**				**S800-NN**		**S1000-NN**		**S1250-NN**		**S1600-NN**				
Number of poles			3	4	3	4	3	4	3	4	3	4	3	4			
■Ratings																	
Rated current, A			600		630		800		1000		1250		1600				
Rated insulation voltage〔U_i〕 V			690		690		690		690		690		690				
Rated operational voltage V		AC	690		690		690		690		690		690				
		DC	250		250		250		250		250		250				
Rated impulse withstand voltage〔U_{imp}〕 kV			8		8		8		8		8		8				
Rated short circuit making capacity〔I_{cm}〕 kA peak			17		17		17		17		32		45				
Rated short time withstand current〔I_{cw}〕 kA			10 (0.3sec.)		10 (0.3sec.)		10 (0.3sec.)		10 (0.3sec.)		15 (0.3sec.)		20 (0.3sec.)				
■Performance																	
Utilization category		AC	AC-23A		AC-23A		AC-23A		AC-23A		AC-23A		AC-23A				
JIS C 8201-3 IEC 60947-3		DC	DC-22A		DC-22A		DC-22A		DC-22A		DC-22A		DC-22A				
Upstream breaker (OCPD) ㉙			**S630-NF**		**S630-NF**		**S800-NF**		**S1000-CE**		**S1250-NE**		**S1600-NE**				
■External dimensions, mm																	
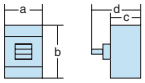		a	210	280	210	280	210	280	210	280	210	280	210	280			
		b	273		273		273		273		370		370				
		c	103		103		103		103		120		140				
		d	145		145		145		145		171		191				
Weight (◉ marked standard type) kg			8.0	11.0	8.0	11.0	8.5	11.5	10.4	14.0	18.2	23.4	24.9	32.9			
■Connections and Mountings																	
Front-connected (FC)	Terminal screws		—		—		—		—		—		—				
	With extension bars		◉		◉		◉		◉		◉		○				
Rear-connected (RC)	Flat bar studs		○		○		○		○		○		◉				
Plug-in (PM) For switchboards	High-performance (PMB)		○ ㊺		○ ㊺		○ ㊺		—		—		—				
	Standard (PMC)		○	—	○	—	○	—	—		○		—				
For distribution boards (PMD)			—		—		—		—		—		—				
lush-mounted (FP)	With flat bar studs		○		○		○		○		○		○				
Draw-out type (DR)			▲		▲		▲		—		▲		○				
TemPlug70 (PG)			○	—	○	—	—		—		—		—				
DIN rail mount			—		—		—		—		—		—				
■Accessories (optional)		Symbol															
Internally mounted	Auxiliary switch	A X	●		●		●		●		●		●				
	Alarm switch	A L	●		●		●		●		●		●				
	Shunt trips	S H	●		●		●		●		●		●				
	Undervoltage trips	U V	●		●		●		●		●		●				
Externally mounted	Motor operator	M C	●		●		●		●		●		●				
	External operating handle: Breaker-mounted	H B	●		●		●		●		●		●				
	External operating handle: Door-mounted (variable depth)	H P	●		●		●		●		●		●				
	Toggle extension	H A	●		●		●		●		● ㉔		● ㉔				
	Mechanical interlock ⑨: Slide type	M S	●		●		●		●		●		●				
	Mechanical interlock ⑨: Rear-connected type	M B	—		—		—		—		●		●				
	Mechanical interlock ⑨: Link type	M L	●		●		●		●		—		—				
	Mechanical interlock ⑨: Wire type	MW	●		●		●		●		●		●				
	Toggle holder	H H	●		●		●		●		●		●				
	Toggle lock	H L															
	Terminal cover: For front-connected	C F	●		●		●		●		●		—				
	Terminal cover: For rear-connected and plug-in	C R	●		●		●		●		—		—				
	Terminal block for lead	T F	●		●		●		●		●		●				
	Door flange	D F	●		●		●		●		●		●				
CE marking			Yes		Yes		Yes		Yes		Yes		Yes				
Colour of cover			Grey Blue		Grey Blue		Grey Blue		Grey Blue		Grey Blue		Grey Blue				
Trip button (Colour)			Yes (Red)		Yes (Red)		Yes (Red)		Yes (Red)		Yes (Red)		Yes (Red)				
Suitability for isolation			Yes		Yes		Yes		Yes		Yes		Yes				
Reverse connection			Yes		Yes		Yes		Yes		Yes		Yes				
Page of characteristics and outline dimensions			7-110		7-110		7-110		7-110		7-112		7-114				

Notes:

◉ : Standard. This configuration used unless otherwise specified. ○ : Optional standard. Specify when ordering.
▲ : Semi-standard. ● : "yes" or "available". — : "no" or "not available".
⑨ : Mechanical interlocks cannot be applied to draw-out type (DR).
㉔ : One is supplied with every five breakers. Please specify if more are required.
㉙ : Please use upstream breaker for overcurrent protection. Rated conditional short-circuit current [Icc] will be the same as Rated short-circuit breaking capacity of upstream breaker.
㊺ : A safety lock function is provided.

8 Non-automatic trip breakers

Frame size (A)			2000		2500		3200				
Type			XS2000NN		XS2500NN		XS3200NN				
Number of poles			3	4	3	4	3				
■Ratings											
Rated current, A			2000		2500		3200				
Rated insulation voltage 〔U_i〕 V			690		690		690				
Rated operational voltage V		AC	690		690		690				
		DC	250		250		250				
Rated impulse withstand voltage 〔U_{imp}〕 kV			8		8		8				
Rated short circuit making capacity 〔I_{cm}〕 kA peak			90		90		90				
Rated short time withstand current 〔I_{cw}〕 kA			35 (0.3sec.)		35 (0.3sec.)		38 (0.5sec.)				
■Performance											
Max switching current A		AC	12000		15000		15000				
JIS C 8201-2-1 Ann.1 Ann.2 ⑥⑦		DC	5000		6250		6250				
IEC60947-2											
Ann.L CBI-Y											
Endurance	Number of operating cycles with current		500		500		500				
	Number of operating cycles without current		2500		2500		1500				
Upstream breaker (OCPD) ㉙			XS2000NE		XS2500NE		XS3200NE				
■External dimensions, mm											
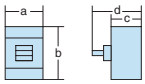		a	320	429	320	429	320				
		b	450		450		450				
		c	185		185		185				
		d	245		245		245				
Weight (◉ marked standard type) kg			51.8	64.8	60	75.7	60				
■Connections and Mountings											
Front-connected (FC)	Terminal screws		—		—		—				
	With extension bars		○		—		—				
Rear-connected (RC)	Flat bar studs		◉		◉		◉				
Plug-in (PM) For switchboards	High-performance (PMB)		—		—		—				
	Standard (PMC)		—		—		—				
For distribution boards (PMD)			—		—		—				
Flush-mounted (FP)	With flat bar studs		○		○		○				
Draw-out type (DR)			○		—		—				
TemPlug70 (PG)			—		—		—				
DIN rail mount			—		—		—				
■Accessories (optional)		Symbol									
Internally mounted	Auxiliary switch	A X	●		●		●				
	Alarm switch	A L	●		●		●				
	Shunt trips	S H	●		●		●				
	Undervoltage trips	U V	● ⑥		● ⑥		● ⑥				
Externally mounted	Toggle extension	H A	● ②		● ②		● ②				
	Mechanical interlock ⑨ Slide type	M S	●		●		●				
	Rear-connected type	M B	●		●		●				
	Link type	M L	—		—		—				
	Wire type	MW	—		—		—				
	Terminal cover For front-connected	C F	—		—		—				
	For rear-connected and plug-in	C R	—		—		—				
	Terminal block for lead	T F	●		●		●				
	Door flange	D F	●		●		●				
CE marking			Non		Non		Non				
Colour of cover			Grey Blue		Grey Blue		Grey Blue				
Trip button (Colour)			Yes (Red)		Yes (Red)		Yes (Red)				
Suitability for isolation			Non		Non		Non				
Reverse connection			Yes		Yes		Yes				
Page of characteristics and outline dimensions			7-116		7-118		7-118				

Notes:
◉ : Standard. This configuration used unless otherwise specified. ○ : Optional standard. Specify when ordering.
● : "yes" or "available". — : "no" or "not available".
② : Supplied as standard. ⑥ : With AC UVT, the UVT controller is externally mounted. ⑨ : Mechanical interlocks cannot be applied to draw-out type (DR).
㉙ : Please use upstream breaker for overcurrent protection. Rated conditional short-circuit current [Icc] will be the same as Rated short-circuit breaking capacity of upstream breaker.
⑥⑥ : Fixed depth, not adjustable. ⑥⑦ : XS2000NN, XS2500NN, and XS3200NN are JIS C 8201-2-1 Ann.2 compliant.

9 Circuit Breaker with earth leakage alarm (Harmonics/surge with countermeasure)

Frame size (A)		50	50	50	100	125	100	125
Type		PE50-NFZ	PS50-NFZ	ZAS50-GF	PE125-NFZ		ZAS125-SF	
Number of poles ⑭⑮		3	3	3 / 4	3	3	3	3
■Ratings								
Rated current, A		15	15	15 50	60	125	15 50	125
Calibrated at 40°C		20	20	20	75		20 60	
		30	30	30	100		30 75	
		40	40	40			40 100	
		50	50					
Rated operational voltage V		100-440 common	100-440 common	100-440 common	100-440 common	100-440 common	100-440 common	100-440 common
Applicable range V		80～484	80～484	80～484	80～484	80～484	80～484	80～484
Rated impulse withstand voltage〔U_{imp}〕 kV		6	6	8	6	6	8	8
■Rated breaking capacity, kA								
JIS C 8201-2-1 Ann.2 AC	440V	2.5	7.5	50	10	10	25	25
I_{cu}(sym)	415V	2.5	7.5	65	10	10	30	30
	240V	7.5	15	85	30	30	50	50
■Earth leakage alarm specifications								
Earth leakage detection (Current operation type)		Electronic	Electronic	Electronic	Electronic	Electronic	Electronic	Electronic
Rated sensitivity current mA		30/100/500 selectable	30/100/500 selectable	100/200/500 selectable	30/100/500 selectable	30/100/500 selectable	100/200/500 selectable	100/200/500 selectable
Max. operating time sec		0.1/0.45/1.0 selectable	0.1/0.45/1.0 selectable	0.1/0.45/1.0 selectable	0.1/0.45/1.0 selectable	0.1/0.45/1.0 selectable	0.1/0.45/1.0 selectable	0.1/0.45/1.0 selectable
Earth leakage alarm output contact configuration ㉚		1c	1c	1c	1c	1c	1c	1c
Alarm reset function (manual reset) ㊴		Push button	Push button	Push button ⑧	Push button	Push button	Push button ⑧	Push button ⑧
■External dimensions, mm								
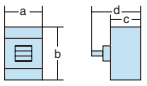	a	75	75	90 / 120	75	75	75	75
	b	130	130	155	130	130	130	130
	c	68	68	68	68	68	68	68
	d	90	90	92	90	90	95	95
Weight (◉ marked standard type) kg		0.8	0.8	1.3 / 1.7	0.9	0.9	0.95	0.95
■Connections and Mountings								
Front-connected (FC) Terminal screws		◉ ㊺	◉ ㊺	◉	◉	◉	◉ ④	◉
With extension bars		○ ㊸	○ ㊸	○ ㊸	○ ㊸	○ ㊸	○ ㊸	○ ㊸
Rear-connected (RC) Flat bar studs		○	○	○	○	○	○	○
Plug-in (PM) For switchboards High-performance (PMB)		—	—	—	—	—	—	—
Standard (PMC)		—	—	—	—	—	—	—
For distribution boards (PMD)		—	—	—	—	—	—	—
Flush-mounted (FP) With flat bar studs		○	○	○	○	○	○	○
Draw-out type (DR)		—	—	—	—	—	—	—
TemPlug70 (PG)		—	—	○ —	—	—	○	○
DIN rail mount		○ ⑪	○ ⑪	○ ⑪	○ ⑪	○ ⑪	○ ⑪	○ ⑪
■Accessories (optional)	Symbol							
Internally mounted: Auxiliary switch	A X	●	●	●	●	●	●	●
Alarm switch	A L	●	●	●	●	●	●	●
Shunt trips	S H	—	—	△ ㊿㊷	—	—	△ ㊿㊷	△ ㊿㊷
Undervoltage trips	U V	—	—	—	—	—	—	—
Test lead	T L	—	—	● ㊷	—	—	—	—
Megger test switch	M G	—	—	●	—	—	●	●
Externally mounted: Motor operator	M C	—	—	●	—	—	—	—
External operating handle: Breaker-mounted	H B	●	●	●	●	●	●	●
Door-mounted (variable depth)	H P	●	●	●	●	●	●	●
Toggle extension	H A	—	—	—	—	—	—	—
Mechanical interlock: Slide type	M S	●	●	●	●	●	●	●
Rear-connected type	M B	—	—	—	—	—	—	—
Link type	M L	—	—	—	—	—	—	—
Wire type	M W	—	—	—	—	—	—	—
Toggle holder	H H	●	●	●	●	●	●	●
Toggle lock	H L	●	●	●	●	●	●	●
Terminal cover: For front-connected	C F	●	●	●	●	●	●	●
For rear-connected and plug-in	C R	●	●	●	●	●	●	●
Terminal block for lead	T F	●	●	●	●	●	●	●
Door flange	D F	—	—	—	—	—	—	—
CE marking		Non	Non	Non	Non	Non	Non	Non
Overcurrent trip mechanism		Thermal-magnetic	Thermal-magnetic	Thermal-magnetic	Thermal-magnetic	Thermal-magnetic	Thermal-magnetic	Thermal-magnetic
Earth leakage indication		LED (Red)	LED (Red)	LED (Red)	LED (Red)	LED (Red)	LED (Red)	LED (Red)
Colour of cover		Grey Blue	Grey Blue	Grey Blue	Grey Blue	Grey Blue	Grey Blue	Grey Blue
Trip button (Colour)		Yes (Red)	Yes (Red)	Yes (Red)	Yes (Red)	Yes (Red)	Yes (Red)	Yes (Red)
Suitability for isolation		Yes	Yes	Yes	Yes	Yes	Yes	Yes
Reverse connection		Non	Non	Yes	Non	Non	Yes ㉒	Yes ㉒
Page of characteristics and outline dimensions		7-120	7-120	7-124	7-120	7-120	7-122	7-122

Notes:

◉ : Standard. This configuration used unless otherwise specified. ○ : Optional standard. Specify when ordering.
● : "yes" or "available". — : "no" or "not available". △ : Custom-built product. Please contact us for details.
④ : 50A or less is the M5 wire clamping terminal. ⑧ : Optional remote reset or automatic reset available on request. Please apply this when the reset button cannot be pressed due to the installation of external accessories, etc. See page 6-27 for details. ⑪ : Please order the DIN rail adapter separately. See page 6-152. ⑭ : When applying 3-pole type to a 1ø2W circuit, use both ends and do not use the central pole. ⑮ : When applying 3-pole type to a 1ø3W circuit, apply voltage to both ends and connect the neutral wire to the central pole.
㉚ : See page 6-22 for the contact rating. ㊴ : An earth leakage alarm maintains the operating state until pressing the reset button or turning the main circuit power OFF. If the electric leakage continues, it will be reset while you hold down the reset button, but when you release the reset button, it will return to the operating state. ㊺ : A wire clamping terminal is provided.
㊸ : For the extension bars, please place the order separately in parts.
㊿ : Flush-mounted type cannot be applied when a shunt trip device is mounted. ㉒ : There are some limitations. See page 5-23 for details. ㊷ : See page 6-27 for details.
Remarks: The rated sensitivity current is set to 100mA and the time delay tripping type's operating time is set to 0.45 seconds before delivery.

9 Circuit Breaker with earth leakage alarm (Harmonics/surge with countermeasure)

Frame size (A)	100		125		225		250	225		250		
Type	ZAS100-GF		ZAS125-GF		ZAE250-SF			ZAS250-SF				
Number of poles ⑭⑮	3	4	3	4	3		3	3		3		
■Ratings												
Rated current, A	15	50	125		125	225	250	125	225	250		
Calibrated at 40°C	20	60			150			150				
	30	75			175			175				
	40	100			200			200				
Rated operational voltage V	100-440 common		100-440 common		100-440 common		100-440 common	100-440 common		100-440 common		
Applicable range V	80～484		80～484		80～484		80～484	80～484		80～484		
Rated impulse withstand voltage〔U_{imp}〕 kV	8		8		8		8	8		8		
■Rated breaking capacity, kA												
JIS C 8201-2-1 Ann.2 AC 440V	50		50		15		15	30		30		
I_{cu}(sym) 415V	65		65		25		25	40		40		
240V	85		85		35		35	85		85		
■Earth leakage alarm specifications												
Earth leakage detection (Current operation type)	Electronic		Electronic		Electronic		Electronic	Electronic		Electronic		
Rated sensitivity current mA	100/200/500 selectable		100/200/500 selectable		100/200/500 selectable		100/200/500 selectable	100/200/500 selectable		100/200/500 selectable		
Max. operating time sec	0.1/0.45/1.0 selectable		0.1/0.45/1.0 selectable		0.1/0.45/1.0 selectable		0.1/0.45/1.0 selectable	0.1/0.45/1.0 selectable		0.1/0.45/1.0 selectable		
Earth leakage alarm output contact configuration ㉚	1c		1c		1c		1c	1c		1c		
Alarm reset function (manual reset) ㊴	Push button ⑧		Push button ⑧		Push button ⑧		Push button ⑧	Push button ⑧		Push button ⑧		
■External dimensions, mm												
a	90	120	90	120	105		105	105		105		
b	155		155		165		165	165		165		
c	68		68		68		68	68		68		
d	92		92		95		95	95		95		
Weight (◉ marked standard type) kg	1.3	1.7	1.3	1.7	1.7		1.7	1.7		1.7		
■Connections and Mountings												
Front-connected (FC) Terminal screws	◉		◉		◉		◉	◉		◉		
With extension bars	○ ㊸		○ ㊸		○ ㊸		○ ㊸	○ ㊸		○ ㊸		
Rear-connected (RC) Flat bar studs	○		○		○		○	○		○		
Plug-in (PM) For switchboards High-performance (PMB)	—		—		—		—	—		—		
Standard (PMC)	—		—		—		—	—		—		
For distribution boards (PMD)	—		—		—		—	—		—		
lush-mounted (FP) With flat bar studs	○		○		○		○	○		○		
Draw-out type (DR)	—		—		—		—	—		—		
TemPlug70 (PG)	○	—	○	—	○		○	○		○		
DIN rail mount	○ ⑪		○ ⑪		—		—	—		—		
■Accessories (optional) Symbol												
Internally mounted: Auxiliary switch A X	●		●		●		●	●		●		
Alarm switch A L	●		●		●		●	●		●		
Shunt trips S H	△ ⑦⓪ ⑧②		△ ⑦⓪ ⑧②		△ ⑦⓪ ⑧②		△ ⑦⓪ ⑧②	△ ⑦⓪ ⑧②		△ ⑦⓪ ⑧②		
Undervoltage trips U V	—		—		—		—	—		—		
Test lead T L	● ⑧②		● ⑧②		● ⑧②		● ⑧②	● ⑧②		● ⑧②		
Megger test switch M G	●		●		●		●	●		●		
Externally mounted: Motor operator M C	●		●		●		●	●		●		
External operating handle: Breaker-mounted H B	●		●		●		●	●		●		
Door-mounted (variable depth) H P	●		●		●		●	●		●		
Toggle extension H A	—		—		—		—	—		—		
Mechanical interlock: Slide type M S	●		●		●		●	●		●		
Rear-connected type M B	—		—		—		—	—		—		
Link type M L	—		—		—		—	—		—		
Wire type M W	—		—		—		—	—		—		
Toggle holder H H	●		●		●		●	●		●		
Toggle lock H L	●		●		●		●	●		●		
Terminal cover: For front-connected C F	●		●		●		●	●		●		
For rear-connected and plug-in C R	●		●		●		●	●		●		
Terminal block for lead T F	●		●		●		●	●		●		
Door flange D F	—		—		—		—	—		—		
CE marking	Non		Non		Non		Non	Non		Non		
Overcurrent trip mechanism	Thermal-magnetic		Thermal-magnetic		Thermal-magnetic		Thermal-magnetic	Thermal-magnetic		Thermal-magnetic		
Earth leakage indication	LED (Red)		LED (Red)		LED (Red)		LED (Red)	LED (Red)		LED (Red)		
Colour of cover	Grey Blue		Grey Blue		Grey Blue		Grey Blue	Grey Blue		Grey Blue		
Trip button (Colour)	Yes (Red)		Yes (Red)		Yes (Red)		Yes (Red)	Yes (Red)		Yes (Red)		
Suitability for isolation	Yes		Yes		Yes		Yes	Yes		Yes		
Reverse connection	Yes		Yes		Yes		Yes	Yes		Yes		
Page of characteristics and outline dimensions	7-124		7-126		7-128		7-128	7-128		7-128		

Notes:

◉ : Standard. This configuration used unless otherwise specified. ○ : Optional standard. Specify when ordering.

● : "yes" or "available". — : "no" or "not available". △ : Custom-built product. Please contact us for details.

⑧ : Optional remote reset or automatic reset available on request. Please apply this when the reset button cannot be pressed due to the installation of external accessories, etc. See page 6-27 for details. ⑪ : Please order the DIN rail adapter separately. See page 6-152. ⑭ : When applying 3-pole type to a 1ø2W circuit, use both ends and do not use the central pole. ⑮ : When applying 3-pole type to a 1ø3W circuit, apply voltage to both ends and connect the neutral wire to the central pole. ㉚ : See page 6-22 for the contact rating.

㊴ : An earth leakage alarm maintains the operating state until pressing the reset button or turning the main circuit power OFF. If the electric leakage continues, it will be reset while you hold down the reset button, but when you release the reset button, it will return to the operating state. ㊸ : For the extension bars, please place the order separately in parts.

⑦⓪ : Flush-mounted type cannot be applied when a shunt trip device is mounted. ⑧② : See page 6-27 for details.

Remarks: The rated sensitivity current is set to 100mA and the time delay tripping type's operating time is set to 0.45 seconds before delivery.

9 Circuit Breaker with earth leakage alarm (Harmonics/surge with countermeasure)

Frame size (A)			225		250		400	400		400		600	630	
Type			ZAS225-GF		ZAS250-GF		ZAE400-NF	ZAS400-NF		ZAS400-GF		ZAS630-CF		
Number of poles ⑭⑮			3	4	3	4	3	3	4	3	4	3	3	
■Ratings														
Rated current, A			125	225	250		250	250		250		500	630	
Calibrated at 40°C			150				300	300		300		600		
			175				350	350		350				
			200				400	400		400				
Rated operational voltage V			100-440 common		100-440 common		100-440 common	100-440 common		100-440 common		100-440 common	100-440 common	
Applicable range V			80～484		80～484		80～484	80～484		80～484		80～484	80～484	
Rated impulse withstand voltage〔U_{imp}〕 kV			8		8		8	8		8		8	8	
■Rated breaking capacity, kA														
JIS C 8201-2-1 Ann.2	AC	440V	50		50		22	45		65		30	30	
I_{cu}(sym)		415V	65		65		25	50		70		36	36	
		240V	85		85		35	85		100		50	50	
■Earth leakage alarm specifications														
Earth leakage detection (Current operation type)			Electronic		Electronic		Electronic	Electronic		Electronic		Electronic	Electronic	
Rated sensitivity current mA			100/200/500 selectable		100/200/500 selectable		100/200/500 selectable	100/200/500 selectable		100/200/500 selectable		100/200/500 selectable	100/200/500 selectable	
Max. operating time sec			0.1/0.45/1.0 selectable		0.1/0.45/1.0 selectable		0.1/0.45/1.0 selectable	0.1/0.45/1.0 selectable		0.1/0.45/1.0 selectable		0.1/0.45/1.0 selectable	0.1/0.45/1.0 selectable	
Earth leakage alarm output contact configuration ㉚			1c		1c		1c	1c		1c		1c	1c	
Alarm reset function (manual reset) ㊴			Push button ⑧		Push button ⑧		Push button ⑧	Push button ⑧		Push button ⑧		Push button ⑧	Push button ⑧	
■External dimensions, mm														
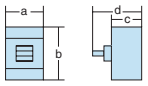		a	105	140	105	140	140	140	185	140	185	210	210	
		b	165		165		260	260		260		273	273	
		c	68		68		103	103		103		103	103	
		d	92		92		145	145		145		145	145	
Weight (◉ marked standard type) kg			1.7	2.1	1.7	2.1	5.2	5.2	6.6	5.2	6.6	10.0	10.0	
■Connections and Mountings														
Front-connected (FC)	Terminal screws		◉		◉		◉	◉		◉		—	—	
	With extension bars		○ ㊸		○ ㊸		○	○		○		◉	◉	
Rear-connected (RC)	Flat bar studs		○		○		○	○		○		○	○	
Plug-in (PM) For switchboards	High-performance (PMB)		—		—		—	—		—		—	—	
	Standard (PMC)		—		—		—	—		—		—	—	
For distribution boards (PMD)			—		—		—	—		—		—	—	
lush-mounted (FP)	With flat bar studs		○		○		○	○		○		○	○	
Draw-out type (DR)			—		—		—	—		—		—	—	
TemPlug70 (PG)			○	—	○	—	○	○	—	○	—	○	○	
DIN rail mount			—		—		—	—		—		—	—	
■Accessories (optional)		Symbol												
Internally mounted	Auxiliary switch	A X	●		●		●	●		●		●	●	
	Alarm switch	A L	●		●		●	●		●		●	●	
	Shunt trips	S H	△ ㊿㊷		△ ㊿㊷		● ㊷	● ㊷		● ㊷		● ㊷	● ㊷	
	Undervoltage trips	U V	—		—		—	—		—		—	—	
	Test lead	T L	● ㊷		● ㊷		● ㊷	● ㊷		● ㊷		● ㊷	● ㊷	
	Megger test switch	M G	●		●		●	●		●		●	●	
Externally mounted	Motor operator	M C	●		●		●	●		●		●	●	
	External operating handle: Breaker-mounted	H B	●		●		●	●		●		●	●	
	External operating handle: Door-mounted (variable depth)	H P	●		●		●	●		●		●	●	
	Toggle extension	H A	—		—		●	●		●		●	●	
	Mechanical interlock: Slide type	M S	●		●		●	●		●		●	●	
	Mechanical interlock: Rear-connected type	M B	—		—		—	—		—		—	—	
	Mechanical interlock: Link type	M L	—		—		—	—		—		—	—	
	Mechanical interlock: Wire type	M W	—		—		—	—		—		—	—	
	Toggle holder	H H	●		●		●	●		●		●	●	
	Toggle lock	H L	●		●									
	Terminal cover: For front-connected	C F	●		●		●	●		●		●	●	
	Terminal cover: For rear-connected and plug-in	C R	●		●		●	●		●		●	●	
	Terminal block for lead	T F	●		●		●	●		●		●	●	
	Door flange	D F	—		—		—	—		—		—	—	
CE marking			Non		Non		Non	Non		Non		Non	Non	
Overcurrent trip mechanism			Thermal-magnetic		Thermal-magnetic		Thermal-magnetic	Thermal-magnetic (adjustable)		Thermal-magnetic (adjustable)		Thermal-magnetic (adjustable)	Thermal-magnetic (adjustable)	
Earth leakage indication			LED (Red)		LED (Red)		LED (Red)	LED (Red)		LED (Red)		LED (Red)	LED (Red)	
Colour of cover			Grey Blue		Grey Blue		Grey Blue	Grey Blue		Grey Blue		Grey Blue	Grey Blue	
Trip button (Colour)			Yes (Red)		Yes (Red)		Yes (Red)	Yes (Red)		Yes (Red)		Yes (Red)	Yes (Red)	
Suitability for isolation			Yes		Yes		Yes	Yes		Yes		Yes	Yes	
Reverse connection			Yes		Yes		Yes	Yes		Yes		Yes	Yes	
Page of characteristics and outline dimensions			7-130		7-132		7-134	7-134		7-134		7-136	7-136	

Notes:

◉ : Standard. This configuration used unless otherwise specified. ○ : Optional standard. Specify when ordering.
● : "yes" or "available". — : "no" or "not available". △ : Custom-built product. Please contact us for details.
⑧ : Optional remote reset or automatic reset available on request. Please apply this when the reset button cannot be pressed due to the installation of external accessories, etc. See page 6-27 for details. ⑭ : When applying 3-pole type to a 1ø2W circuit, use both ends and do not use the central pole.
⑮ : When applying 3-pole type to a 1ø3W circuit, apply voltage to both ends and connect the neutral wire to the central pole. ㉚ : See page 6-22 for the contact rating.
㊴ : An earth leakage alarm maintains the operating state until pressing the reset button or turning the main circuit power OFF. If the electric leakage continues, it will be reset while you hold down the reset button, but when you release the reset button, it will return to the operating state. ㊸ : For the extension bars, please place the order separately in parts. ㊷ : Factory-installed.
㊿ : Flush-mounted type cannot be applied when a shunt trip device is mounted. ㊷ : See page 6-27 for details.
Remarks: The rated sensitivity current is set to 100mA and the time delay tripping type's operating time is set to 0.45 seconds before delivery.

9 Circuit Breaker with earth leakage alarm (Harmonics/surge with countermeasure)

Frame size (A)		600	630	800	800				
Type		ZAS630-NF		ZAS800-CF	ZAS800-NF				
Number of poles ⑭⑮		3	3	3	3				
■Ratings									
Rated current, A		500	630	700	700				
Calibrated at 40°C		600		800	800				
Rated operational voltage V		100-440 common	100-440 common	100-440 common	100-440 common				
Applicable range V		80～484	80～484	80～484	80～484				
Rated impulse withstand voltage〔U_{imp}〕 kV		8	8	8	8				
■Rated breaking capacity, kA									
JIS C 8201-2-1 Ann.2 AC	440V	45	45	30	45				
I_{cu}(sym)	415V	50	50	36	50				
	240V	85	85	50	85				
■Earth leakage alarm specifications									
Earth leakage detection (Current operation type)		Electronic	Electronic	Electronic	Electronic				
Rated sensitivity current mA		100/200/500 selectable	100/200/500 selectable	100/200/500 selectable	100/200/500 selectable				
Max. operating time sec		0.1/0.45/1.0 selectable	0.1/0.45/1.0 selectable	0.1/0.45/1.0 selectable	0.1/0.45/1.0 selectable				
Earth leakage alarm output contact configuration ㉚		1c	1c	1c	1c				
Alarm reset function (manual reset) ㊴		Push button ⑧	Push button ⑧	Push button ⑧	Push button ⑧				
■External dimensions, mm									
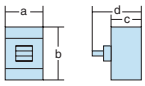	a	210	210	210	210				
	b	273	273	273	273				
	c	103	103	103	103				
	d	145	145	145	145				
Weight (◉ marked standard type) kg		10.0	10.0	11.0	11.0				
■Connections and Mountings									
Front-connected (FC) Terminal screws		—	—	—	—				
With extension bars		◉	◉	◉	◉				
Rear-connected (RC) Flat bar studs		○	○	○	○				
Plug-in (PM) For switchboards High-performance (PMB)		—	—	—	—				
Standard (PMC)		—	—	—	—				
For distribution boards (PMD)		—	—	—	—				
lush-mounted (FP) With flat bar studs		○	○	○	○				
Draw-out type (DR)		—	—	—	—				
TemPlug70 (PG)		○	○	—	—				
DIN rail mount		—	—	—	—				
■Accessories (optional)	Symbol								
Internally mounted: Auxiliary switch	A X	●	●	●	●				
Alarm switch	A L	●	●	●	●				
Shunt trips	S H	● ⑫	● ⑫	● ⑫	● ⑫				
Undervoltage trips	U V	—	—	—	—				
Test lead	T L	● ㉒	● ㉒	● ㉒	● ㉒				
Megger test switch	M G	●	●	●	●				
Externally mounted: Motor operator	M C	●	●	●	●				
External operating handle: Breaker-mounted	H B	●	●	●	●				
Door-mounted (variable depth)	H P	●	●	●	●				
Toggle extension	H A	●	●	●	●				
Mechanical interlock: Slide type	M S	●	●	●	●				
Rear-connected type	M B	—	—	—	—				
Link type	M L	—	—	—	—				
Wire type	M W	—	—	—	—				
Toggle holder	H H	●	●	●	●				
Toggle lock	H L								
Terminal cover: For front-connected	C F	●	●	●	●				
For rear-connected and plug-in	C R	●	●	●	●				
Terminal block for lead	T F	●	●	●	●				
Door flange	D F	—	—	—	—				
CE marking		Non	Non	Non	Non				
Overcurrent trip mechanism		Thermal-magnetic (adjustable)	Thermal-magnetic (adjustable)	Thermal-magnetic (adjustable)	Thermal-magnetic (adjustable)				
Earth leakage indication		LED (Red)	LED (Red)	LED (Red)	LED (Red)				
Colour of cover		Grey Blue	Grey Blue	Grey Blue	Grey Blue				
Trip button (Colour)		Yes (Red)	Yes (Red)	Yes (Red)	Yes (Red)				
Suitability for isolation		Yes	Yes	Yes	Yes				
Reverse connection		Yes	Yes	Yes	Yes				
Page of characteristics and outline dimensions		7-136	7-136	7-138	7-138				

Notes:
◉ : Standard. This configuration used unless otherwise specified. ○ : Optional standard. Specify when ordering.
● : "yes" or "available". — : "no" or "not available".
⑧ : Optional remote reset or automatic reset available on request. Please apply this when the reset button cannot be pressed due to the installation of external accessories, etc. See page 6-27 for details. ⑭ : When applying 3-pole type to a 1ø2W circuit, use both ends and do not use the central pole.
⑮ : When applying 3-pole type to a 1ø3W circuit, apply voltage to both ends and connect the neutral wire to the central pole. ㉚ : See page 6-22 for the contact rating.
㊴ : An earth leakage alarm maintains the operating state until pressing the reset button or turning the main circuit power OFF. If the electric leakage continues, it will be reset while you hold down the reset button, but when you release the reset button, it will return to the operating state. ⑫ : Factory-installed. ㉒ : See page 6-27 for details.
Remarks: The rated sensitivity current is set to 100mA and the time delay tripping type's operating time is set to 0.45 seconds before delivery.

10 Circuit Breaker with earth leakage alarm for distribution boards and control boards

Frame size (A)		50	50	100					
Type		TB50KSL	TB50KSZ	TB100KSZ					
Number of poles ⑭⑮		2	3	3					
■Ratings									
Rated current, A		15 50	15 50	60					
Calibrated at 40°C		20	20	75					
		30	30	100					
		40	40						
Rated operational voltage AC V		100-240 common	200-415 common	200-415 common					
Applicable range V		80～264	160～484	160～484					
■Rated breaking capacity, kA									
JIS C 8201-2-1 Ann.2	AC 415V	—	2.5	2.5					
I_{cu}(sym)	200V	5(240V)	5	5					
	100/200V	—	5	5					
	100V	5	—	—					
■Earth leakage alarm specifications									
Earth leakage detection (Current operation type)		Electronic	Electronic	Electronic					
Rated sensitivity current mA		30/100 selectable	30/100/500 selectable	30/100/500 selectable					
Max. operating time sec		0.1	0.1	0.1					
Earth leakage alarm output contact configuration ㉚		— ㊱	1c	1c					
Alarm reset function (manual reset) ㊴		Push button	Push button ㉞	Push button ㉞					
■External dimensions, mm									
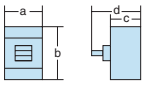	a	50	75	75					
	b	96	96	96					
	c	60	60	60					
	d	75	75	75					
Weight (◉ marked standard type) kg		0.3	0.5	0.6					
■Connections and Mountings									
Front-connected (FC) Terminal screws		◉ ㊺	◉ ㊺	◉					
Rear-connected (RC)		—	—	—					
Flush-mounted (FP)		—	—	—					
DIN rail mount		○ ㊷	○ ㊷	○ ㊷					
Clip-in chassis mount		◉	◉	◉					
■Accessories (optional)	Symbol								
Internally mounted: Auxiliary switch	A X	●	●	●					
Internally mounted: Alarm switch	A L	●	●	●					
Internally mounted: Shunt trips	S H	—	●	●					
Internally mounted: Undervoltage trips	U V	—	—	—					
Internally mounted: Test lead	T L	—	—	—					
Internally mounted: Megger test switch	M G	● ㊲	● ㊲	● ㊲					
Externally mounted: Toggle holder	H H	●	●	●					
Externally mounted: Toggle lock	H L	—	—	—					
Externally mounted: Terminal cover For front-connected	C F	●	●	●					
Externally mounted: Terminal block for lead	T F	●	●	●					
CE marking		Non	Non	Non					
Overcurrent trip mechanism		Hydraulic-magnetic type	Hydraulic-magnetic type	Hydraulic-magnetic type					
Earth leakage indication		LED (Red)	LED (Red)	LED (Red)					
Colour of cover		Grey	Grey	Grey					
Trip button (Colour)		Yes (Red)	Yes (Red)	Yes (Red)					
Reverse connection		Non	Non	Non					
Page of characteristics and outline dimensions		7-140	7-142	7-142					

Notes:

◉ : Standard. This configuration used unless otherwise specified. ○ : Optional standard. Specify when ordering.

● : "yes" or "available". — : "no" or "not available".

⑭ : When applying 3-pole type to a 1ø2W circuit, use both ends and do not use the central pole.

⑮ : When applying 3-pole type to a 1ø3W circuit, apply voltage to both ends and connect the neutral wire to the central pole. ㉚ : See page 6-22 for the contact rating.

㉞ : Optional lead wire draw-in for remote reset available on request. Please specify "with MRA" when ordering. The external switch should be a self-resetting a-contact (NO) switch (for 24V DC 10mA microload circuit), and do not apply voltage.

㊱ : The earth leakage alarm of TB50KSL type is LED indication only. ㊲ : If the megger test switch is mounted, the auxiliary switch cannot be mounted.

㊴ : An earth leakage alarm maintains the operating state until pressing the reset button or turning the main circuit power OFF. If the electric leakage continues, it will be reset while you hold down the reset button, but when you release the reset button, it will return to the operating state.

㊺ : A wire clamping terminal is provided. ㊷ : Please order the DIN rail mounting bracket separately. (Order type: 50EE-RAIL, 1 set per unit)

11 Single phase 3-wire circuit breaker with neutral phase open protection and earth leakage alarm (Harmonics/surge with countermeasure)

Frame size (A)		100	125	100	125	225	250	225	250
Type		NAE125-SF		NAS125-SF		NAE250-SF		NAS250-SF	
Number of poles / Elements		3P3E ⑩	3P3E ⑩	3P3E ⑩	3P3E ⑩	3P3E ⑩	3P3E ⑩	3P3E ⑩	3P3E ⑩
Phase and wires		1ø3W	1ø3W	1ø3W	1ø3W	1ø3W	1ø3W	1ø3W	1ø3W
■Ratings									
Rated current, A		15 50	125	15 50	125	125 225	250	125 225	250
Calibrated at 40°C		20 60		20 60		150		150	
		30 75		30 75		175		175	
		40 100		40 100		200		200	
Rated operational voltage AC V		100/200	100/200	100/200	100/200	100/200	100/200	100/200	100/200
Rated impulse withstand voltage [U_{imp}] kV		8	8	8	8	8	8	8	8
Single 3-phase neutral wire open phase protection characteristics	Rated operating overvoltage AC V	135	135	135	135	135	135	135	135
	Rated non-operating overvoltage AC V	120	120	120	120	120	120	120	120
	Rated overvoltage operating time (sec)	1 or less	1 or less	1 or less	1 or less	1 or less	1 or less	1 or less	1 or less
■Rated breaking capacity, kA									
JIS C 8201-2-1 Ann.2 I_{cu} (sym) AC 100/200V		35	35	50	50	35	35	85	85
■External dimensions, mm									
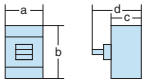	a	100	100	100	100	130	130	130	130
	b	130	130	130	130	165	165	165	165
	c	68	68	68	68	68	68	68	68
	d	95	95	95	95	95	95	95	95
Weight (◉ marked standard type) kg		1.15	1.15	1.15	1.15	1.8	1.8	1.8	1.8
■Earth leakage alarm specifications									
Earth leakage detection (Current operation type)		Electronic	Electronic	Electronic	Electronic	Electronic	Electronic	Electronic	Electronic
Rated sensitivity current mA		30/100/500 selectable	30/100/500 selectable	30/100/500 selectable	30/100/500 selectable	30/100/500 selectable	30/100/500 selectable	30/100/500 selectable	30/100/500 selectable
		100/200/500 selectable	100/200/500 selectable	100/200/500 selectable	100/200/500 selectable	100/200/500 selectable	100/200/500 selectable	100/200/500 selectable	100/200/500 selectable
Max. operating time sec		0.1/0.45/1.0 selectable	0.1/0.45/1.0 selectable	0.1/0.45/1.0 selectable	0.1/0.45/1.0 selectable	0.1/0.45/1.0 selectable	0.1/0.45/1.0 selectable	0.1/0.45/1.0 selectable	0.1/0.45/1.0 selectable
Earth leakage alarm output contact configuration ㉚		1c	1c	1c	1c	1c	1c	1c	1c
Alarm reset function (manual reset) ㊴		Push button ⑧	Push button ⑧	Push button ⑧	Push button ⑧	Push button ⑧	Push button ⑧	Push button ⑧	Push button ⑧
Earth leakage indication		LED (Red)	LED (Red)	LED (Red)	LED (Red)	LED (Red)	LED (Red)	LED (Red)	LED (Red)
■Connections and Mountings									
Front-connected (FC)	Terminal screws	◉ ④	◉	◉ ④	◉	◉	◉	◉	◉
	With extension bars	○ ㊸	○ ㊸	○ ㊸	○ ㊸	○ ㊸	○ ㊸	○ ㊸	○ ㊸
Rear-connected (RC)	Flat bar studs	△	△	△	△	△	△	△	△
■Accessories (optional)	Symbol								
Internally mounted	Auxiliary switch A X	●	●	●	●	●	●	●	●
	Alarm switch A L	●	●	●	●	●	●	●	●
	Shunt trips S H	—	—	—	—	—	—	—	—
	Undervoltage trips U V	—	—	—	—	—	—	—	—
	Test lead T L	—	—	—	—	—	—	—	—
	Megger test switch M G	●	●	●	●	●	●	●	●
Externally mounted	Motor operator M C	—	—	—	—	●	●	●	●
	External operating handle: Breaker-mounted H B	●	●	●	●	●	●	●	●
	External operating handle: Door-mounted (variable depth) H P	●	●	●	●	●	●	●	●
	Toggle extension H A	—	—	—	—	—	—	—	—
	Mechanical interlock: Slide type M S	—	—	—	—	—	—	—	—
	Mechanical interlock: Link type M L	—	—	—	—	—	—	—	—
	Mechanical interlock: Wire type M W	—	—	—	—	—	—	—	—
	Toggle holder H H	●	●	●	●	●	●	●	●
	Toggle lock H L	●	●	●	●	●	●	●	●
	Terminal cover: For front-connected C F	●	●	●	●	●	●	●	●
	Terminal cover: For rear-connected C R	●	●	●	●	●	●	●	●
	Terminal block for lead T F	●	●	●	●	●	●	●	●
	Door flange D F	—	—	—	—	—	—	—	—
CE marking		Non	Non	Non	Non	Non	Non	Non	Non
Overcurrent trip mechanism		Thermal-magnetic	Thermal-magnetic	Thermal-magnetic	Thermal-magnetic	Thermal-magnetic	Thermal-magnetic	Thermal-magnetic	Thermal-magnetic
Colour of cover		Grey Blue	Grey Blue	Grey Blue	Grey Blue	Grey Blue	Grey Blue	Grey Blue	Grey Blue
Trip button (Colour)		Yes (Red)	Yes (Red)	Yes (Red)	Yes (Red)	Yes (Red)	Yes (Red)	Yes (Red)	Yes (Red)
Suitability for isolation		Yes	Yes	Yes	Yes	Yes	Yes	Yes	Yes
Reverse power flow circuit		Yes ㉕	Yes ㉕	Yes ㉕	Yes ㉕	Yes ㉕	Yes ㉕	Yes ㉕	Yes ㉕
Page of characteristics and outline dimensions		7-144	7-144	7-144	7-144	7-146	7-146	7-146	7-146

Notes:

◉ : Standard. This configuration used unless otherwise specified. ○ : Optional standard. Specify when ordering.
● : "yes" or "available". — : "no" or "not available". △ : Custom-built product. Please contact us for details.
④ : 50A or less is the M5 wire clamping terminal.
⑧ : Optional remote reset or automatic reset available on request. Please apply this when the reset button cannot be pressed due to the installation of external accessories, etc. See page 6-27 for details.
⑩ : They can also be applied to circuits where overcurrent flows in the neutral wire.
㉚ : See page 6-22 for the contact rating.
㊴ : An earth leakage alarm maintains the operating state until pressing the reset button or turning the main circuit power OFF. If the electric leakage continues, it will be reset while you hold down the reset button, but when you release the reset button, it will return to the operating state.
㊸ : For the extension bars, please place the order separately in parts.
㉕ : Since the overvoltage and earth leakage detection circuit has a continuous rating specification, there is no need to turn off the power of the detection circuit using a megger test switch, etc.

Remarks: See pages 3-25 and 3-26 for connection details.

11 Single phase 3-wire circuit breaker with neutral phase open protection and earth leakage alarm (Harmonics/surge with countermeasure)

Frame size (A)		400	400
Type		**NAE400-NF**	**NAS400-NF**
Number of poles / Elements		3P2E ⑱	3P2E ⑱
Phase and wires		1ø3W	1ø3W
■Ratings			
Rated current, A		250	250
Calibrated at 40°C		300	300
		350	350
		400	400
Rated operational voltage AC V		100/200	100/200
Rated impulse withstand voltage 〔U_{imp}〕 kV		8	8
Single 3-phase neutral wire open phase protection characteristics	Rated operating overvoltage AC V	135	135
	Rated non-operating overvoltage AC V	120	120
	Rated overvoltage operating time (sec)	1 or less	1 or less
■Rated breaking capacity, kA			
JIS C 8201-2-1 Ann.2 I_{cu} (sym) AC 100/200V		35	85
■External dimensions, mm			
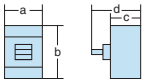	a	170	170
	b	260	260
	c	103	103
	d	145	145
Weight (◉ marked standard type) kg		4.9	4.9
■Earth leakage alarm specifications			
Earth leakage detection (Current operation type)		Electronic	Electronic
Rated sensitivity current mA		30/100/500 selectable	30/100/500 selectable
		100/200/500 selectable	100/200/500 selectable
Max. operating time sec		0.1/0.45/1.0 selectable	0.1/0.45/1.0 selectable
Earth leakage alarm output contact configuration ㉚		1c	1c
Alarm reset function (manual reset) ㊴		Push button ⑧	Push button ⑧
Earth leakage indication		LED (Red)	LED (Red)
■Connections and Mountings			
Front-connected (FC)	Terminal screws	◉	◉
	With extension bars	○	○
Rear-connected (RC)	Flat bar studs	△	△
■Accessories (optional)	Symbol		
Internally mounted: Auxiliary switch	A X	●	●
Internally mounted: Alarm switch	A L	●	●
Internally mounted: Shunt trips	S H	—	—
Internally mounted: Undervoltage trips	U V	—	—
Internally mounted: Test lead	T L	—	—
Internally mounted: Megger test switch	M G	●	●
Externally mounted: Motor operator	M C	●	●
Externally mounted: External operating handle	Breaker-mounted H B	●	●
	Door-mounted (variable depth) H P	●	●
Externally mounted: Toggle extension	H A	●	●
Externally mounted: Mechanical interlock	Slide type M S	—	—
	Link type M L	—	—
	Wire type M W	—	—
Externally mounted: Toggle holder	H H	●	●
Externally mounted: Toggle lock	H L		
Externally mounted: Terminal cover	For front-connected C F	●	●
	For rear-connected C R	●	●
Externally mounted: Terminal block for lead	T F	●	●
Externally mounted: Door flange	D F	—	—
CE marking		Non	Non
Overcurrent trip mechanism		Thermal-magnetic	Thermal-magnetic (adjustable)
Colour of cover		Grey Blue	Grey Blue
Trip button (Colour)		Yes (Red)	Yes (Red)
Suitability for isolation		Yes	Yes
Reverse power flow circuit		Yes ⑮	Yes ⑮
Page of characteristics and outline dimensions		7-148	7-148

Notes:

◉ : Standard. This configuration used unless otherwise specified. ○ : Optional standard. Specify when ordering.

● : "yes" or "available". — : "no" or "not available". △ : Custom-built product. Please contact us for details.

⑧ : Optional remote reset or automatic reset available on request. Please apply this when the reset button cannot be pressed due to the installation of external accessories, etc. See page 6-27 for details.

⑱ : Do not apply to circuits where overcurrent flows in the neutral wire.

㉚ : See page 6-22 for the contact rating.

㊴ : An earth leakage alarm maintains the operating state until pressing the reset button or turning the main circuit power OFF. If the electric leakage continues, it will be reset while you hold down the reset button, but when you release the reset button, it will return to the operating state.

⑮ : Since the overvoltage and earth leakage detection circuit has a continuous rating specification, there is no need to turn off the power of the detection circuit using a megger test switch, etc.

Remarks: See pages 3-25 and 3-26 for connection details.

12 Single phase 3-wire circuit breaker with neutral phase open protection

Frame size (A)		50	100	125	100	125	225	250
Type		PE50-NFN	PE125-NFN		NS125-SF		NE250-SF	
Number of poles / Elements		3P3E ⑩	3P3E ⑩	3P3E ⑩	3P3E ⑩	3P3E ⑩	3P3E ⑩	3P3E ⑩
Phase and wires		1ø3W	1ø3W	1ø3W	1ø3W	1ø3W	1ø3W	1ø3W
■Ratings								
Rated current, A		15	60	125	15 50	125	125 225	250
Calibrated at 40°C		20	75		20 60		150	
		30	100		30 75		175	
		40			40 100		200	
		50						
Rated operational voltage AC V		100/200	100/200	100/200	100/200	100/200	100/200	100/200
Rated impulse withstand voltage (Uimp) kV		6	6	6	8	8	8	8
Single 3-phase neutral wire open phase protection characteristics	Rated operating overvoltage AC V	135	135	135	135	135	135	135
	Rated non-operating overvoltage AC V	120	120	120	120	120	120	120
	Rated overvoltage operating time (sec)	1 or less	1 or less	1 or less	1 or less	1 or less	1 or less	1 or less
■Rated breaking capacity, kA								
JIS C 8201-2-1 Ann.2 I_{cu} (sym) AC 100/200V		10	25	25	50	50	35	35
■External dimensions, mm								
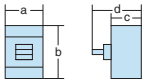	a	75	75	75	75	75	105	105
	b	130	130	130	130	130	165	165
	c	68	68	68	68	68	68	68
	d	90	90	90	95	95	95	95
Weight (◉ marked standard type) kg		0.8	0.8	0.8	0.95	0.95	1.6	1.6
■Connections and Mountings								
Front-connected (FC)	Terminal screws	◉ ㊺	◉	◉	◉ ④	◉	◉	◉
	With extension bars	○ ㊸	○ ㊸	○ ㊸	○ ㊸	○ ㊸	○ ㊸	○ ㊸
Rear-connected (RC)	Flat bar studs	△	△	△	△	△	△	△
DIN rail mount		○ ⑪	○ ⑪	○ ⑪	○ ⑪	○ ⑪	—	—
■Accessories (optional)	Symbol							
Internally mounted: Auxiliary switch	A X	●	●	●	●	●	●	●
Internally mounted: Alarm switch	A L	●	●	●	●	●	●	●
Internally mounted: Shunt trips	S H	—	—	—	—	—	—	—
Internally mounted: Undervoltage trips	U V	—	—	—	—	—	—	—
Internally mounted: Test lead	T L	—	—	—	●	●	●	●
Internally mounted: Megger test switch	M G	—	—	—	●	●	●	●
Externally mounted: Motor operator	M C	—	—	—	—	—	●	●
Externally mounted: External operating handle, Breaker-mounted	H B	●	●	●	●	●	●	●
Externally mounted: External operating handle, Door-mounted (variable depth)	H P	●	●	●	●	●	●	●
Externally mounted: Toggle extension	H A	—	—	—	—	—	—	—
Externally mounted: Mechanical interlock, Slide type	M S	●	●	●	●	●	●	●
Externally mounted: Mechanical interlock, Link type	M L	—	—	—	—	—	—	—
Externally mounted: Mechanical interlock, Wire type	M W	—	—	—	—	—	—	—
Externally mounted: Toggle holder	H H	●	●	●	●	●	●	●
Externally mounted: Toggle lock	H L	●	●	●	●	●	●	●
Externally mounted: Terminal cover, For front-connected	C F	●	●	●	●	●	●	●
Externally mounted: Terminal cover, For rear-connected	C R	●	●	●	●	●	●	●
Externally mounted: Terminal block for lead	T F	●	●	●	●	●	●	●
Externally mounted: Door flange	D F	—	—	—	—	—	—	—
CE marking		Non	Non	Non	Non	Non	Non	Non
Overcurrent trip mechanism		Thermal-magnetic	Thermal-magnetic	Thermal-magnetic	Thermal-magnetic	Thermal-magnetic	Thermal-magnetic	Thermal-magnetic
Overvoltage operation indication function		Mechanical button	Mechanical button	Mechanical button	Mechanical button	Mechanical button	Mechanical button	Mechanical button
Colour of cover		Grey Blue	Grey Blue	Grey Blue	Grey Blue	Grey Blue	Grey Blue	Grey Blue
Trip button (Colour)		Yes (Red)	Yes (Red)	Yes (Red)	Yes (Red)	Yes (Red)	Yes (Red)	Yes (Red)
Suitability for isolation		Yes	Yes	Yes	Yes	Yes	Yes	Yes
Reverse power flow circuit		Non	Non	Non	Yes ⑭	Yes ⑭	Yes ⑭	Yes ⑭
Page of characteristics and outline dimensions		7-150	7-150	7-150	7-152	7-152	7-154	7-154

Notes:

◉ : Standard. This configuration used unless otherwise specified.
○ : Optional standard. Specify when ordering.
● : "yes" or "available". — : "no" or "not available". △ : Custom-built product. Please contact us for details.
④ : 50A or less is the M5 wire clamping terminal.
⑩ : They can also be applied to circuits where overcurrent flows in the neutral wire.
⑪ : Please order the DIN rail adapter separately. See page 6-152.
㊺ : A wire clamping terminal is provided.
㊸ : For the extension bars, please place the order separately in parts.
⑭ : Since the overvoltage detection circuit has a continuous rating specification, there is no need to turn off the power of the detection circuit using a megger test switch, etc.

Remarks: See pages 3-25 and 3-26 for connection details.

12 Single phase 3-wire circuit breaker with neutral phase open protection

Frame size (A)	225	250	400	400	600	630	800
Type	NS250-SF		NE400-NF	NS400-NF	NS630-NF		NS800-NF
Number of poles / Elements	3P3E ⑩	3P3E ⑩	3P2E ⑱	3P2E ⑱	3P2E ⑱	3P2E ⑱	3P2E ⑱
Phase and wires	1ø3W	1ø3W	1ø3W	1ø3W	1ø3W	1ø3W	1ø3W
■Ratings							
Rated current, A	125 225	250	250	250	500	630	700
Calibrated at 40°C	150		300	300	600		800
	175		350	350			
	200		400	400			
Rated operational voltage AC V	100/200	100/200	100/200	100/200	100/200	100/200	100/200
Rated impulse withstand voltage 〔U_{imp}〕 kV	8	8	8	8	8	8	8
Single 3-phase neutral wire open phase protection characteristics: Rated operating overvoltage AC V	135	135	135	135	135	135	135
Rated non-operating overvoltage AC V	120	120	120	120	120	120	120
Rated overvoltage operating time (sec)	1 or less	1 or less	1 or less	1 or less	1 or less	1 or less	1 or less
■Rated breaking capacity, kA							
JIS C 8201-2-1 Ann.2 I_{cu} (sym) AC 100/200V	85	85	35	85	85	85	85
■External dimensions, mm							
a	105	105	140	140	210	210	210
b	165	165	260	260	273	273	273
c	68	68	103	103	103	103	103
d	95	95	145	145	145	145	145
Weight (◉ marked standard type) kg	1.6	1.6	4.8	4.8	10.0	10.0	11.0
■Connections and Mountings							
Front-connected (FC) Terminal screws	◉	◉	◉	◉	—	—	—
With extension bars	○ ㊸	○ ㊸	○	○	◉	◉	◉
Rear-connected (RC) Flat bar studs	△	△	△	△	△	△	△
DIN rail mount	—	—	—	—	—	—	—
■Accessories (optional) Symbol							
Internally mounted: Auxiliary switch A X	●	●	●	●	●	●	●
Alarm switch A L	●	●	●	●	●	●	●
Shunt trips S H	—	—	—	—	—	—	—
Undervoltage trips U V	—	—	—	—	—	—	—
Test lead T L	●	●	●	●	●	●	●
Megger test switch M G	●	●	●	●	●	●	●
Externally mounted: Motor operator M C	●	●	●	●	●	●	●
External operating handle: Breaker-mounted H B	●	●	●	●	●	●	●
Door-mounted (variable depth) H P	●	●	●	●	●	●	●
Toggle extension H A	—	—	●	●	●	●	●
Mechanical interlock: Slide type M S	●	●	●	●	●	●	●
Link type M L	—	—	—	—	—	—	—
Wire type MW	—	—	—	—	—	—	—
Toggle holder H H	●	●	●	●	●	●	●
Toggle lock H L	●	●					
Terminal cover: For front-connected C F	●	●	●	●	●	●	●
For rear-connected C R	●	●	●	●	●	●	●
Terminal block for lead T F	●	●	●	●	●	●	●
Door flange D F	—	—	—	—	—	—	—
CE marking	Non	Non	Non	Non	Non	Non	Non
Overcurrent trip mechanism	Thermal-magnetic	Thermal-magnetic	Thermal-magnetic	Thermal-magnetic	Thermal-magnetic	Thermal-magnetic	Thermal-magnetic
Overvoltage operation indication function	Mechanical button	Mechanical button	Mechanical button	Mechanical button	Mechanical button	Mechanical button	Mechanical button
Colour of cover	Grey Blue	Grey Blue	Grey Blue	Grey Blue	Grey Blue	Grey Blue	Grey Blue
Trip button (Colour)	Yes (Red)	Yes (Red)	Yes (Red)	Yes (Red)	Yes (Red)	Yes (Red)	Yes (Red)
Suitability for isolation	Yes	Yes	Yes	Yes	Yes	Yes	Yes
Reverse power flow circuit	Yes ㊹	Yes ㊹	Yes ㊹	Yes ㊹	Yes ㊹	Yes ㊹	Yes ㊹
Page of characteristics and outline dimensions	7-154	7-154	7-156	7-156	7-158	7-158	7-160

Notes:

◉ : Standard. This configuration used unless otherwise specified.
○ : Optional standard. Specify when ordering.
● : "yes" or "available". — : "no" or "not available". △ : Custom-built product. Please contact us for details.
⑩ : They can also be applied to circuits where overcurrent flows in the neutral wire. ⑱ : Do not apply to circuits where overcurrent flows in the neutral wire.
㊸ : For the extension bars, please place the order separately in parts.
㊹ : Since the overvoltage detection circuit has a continuous rating specification, there is no need to turn off the power of the detection circuit using a megger test switch, etc.

Remarks: See pages 3-25 and 3-26 for connection details.

13 TB series for distribution boards and control boards

Category			Compatibility circuit breaker			Line side Plug-in		Plug-in		TB mini size	
Frame size (A)			50			50		50		50	50
Type			TB-5S			TB-5P		TB-5D		TB-51C	TB-52C
Number of poles			1	2	3	2		2		2 ㊸	2
■Ratings											
Rated current, A			10	30		10	30	10	30	15	15
Calibrated at 40°C			15	40		15	40	15	40	20	20
45°C			20	50		20	50	20	50	30	30
Rated operational voltage V	AC		240	415	415	415		250		100	240
	DC		125	125	—	125		125		—	—
■Rated breaking capacity, kA											
JIS C 8201-2-1 Ann.2	AC	415 V	—	2.5	2.5	2.5		—		—	—
I_{cu} (sym)		240 V	2.5	5	—	5		—		—	2.5
		200 V	2.5	5	5	5		—		—	2.5
		100 / 200 V	—	—	—	—		—		—	5
		100 V	5	—	—	—		—		5	—
	DC	110 V	1	5	—	5		—		—	—
NK	AC	250 V	—	5 ㊹	—	5 ㊹		5 ㊹		—	—
(sym)		125 V	—	42	—	42		42		—	—
	DC	125 V	—	5	—	5		5		—	—
■External dimensions, mm											
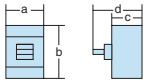	a		25	50	75	50		50		25	25
	b		95			74.5		74.5		95	95
	c		60			60		60		60	60
	d		77	79		79		79		77	77
Weight kg			0.16	0.34	0.5	0.28		0.28		0.15	0.16
■Connections											
Front-connected type on both line side and load side			● ㊺			—		—		● ㊽	● ㊽
Line side plug-in type, load side front-connected type			—			●		—		—	—
Plug-in type on both line side and load side			—			—		●		—	—
■Mountings (optional)											
Clip-in chassis			●			—		—		●	●
Mounting base for single-row installation			—			● ㊼		● ㊼		—	—
Mounting base for branched-into-dual-rows			—			● ㊼		● ㊼		—	—
■Accessories (optional)		Symbol									
Internally mounted	Auxiliary switch	A X	—			—		—		● ㊽	● ㊽
	Alarm switch	A L	—			—		—		● ㊽	● ㊽
Externally mounted	Toggle holder	H H	●			●		●		●	●
	Toggle lock	H L	●	—		—		—		—	—
	Toggle cap	H C	●	—		—		—		●	●
CE marking			Non			Non		Non		Non	Non
Overcurrent trip mechanism			Thermal-magnetic			Thermal-magnetic		Thermal-magnetic		Thermal-magnetic	Thermal-magnetic
Colour of cover			Black			Black		Black		Black	Black
Reverse connection			Yes			Yes		Yes		Yes	Yes
Page of characteristics and outline dimensions			7-162			7-164		7-166		7-168	7-168

Notes:

● : "yes" or "available". — : "no" or "not available".

㊸ : This is 2-pole 1-element. ㊹ : 2.5kA for 10A. ㊺ : A wire clamping terminal is provided. ㊼ : Specify the branch bars when ordering.

㊽ : Distribution board branch conductors and busbar conductor supports are available. (Optional)

㊽ : The auxiliary switch and alarm switch cannot be applied at the same time.

14 Economical series (Harmonics/surge with countermeasure)

Frame size (A)			30	50	60	100	125	225	250	400
Type			PZE30-NF	PZE50-NF	PZE60-NF	PZE125-NF		ZE250-SF		ZE400-NF
Number of poles			3	3	3	3	3	3	3	3
Phase and wires	1ø2W	⑭	●	●	●	●	●	●	●	●
	3ø3W, 1ø3W	⑮	●	●	●	●	●	●	●	●
	3ø4W		—	—	—	—	—	—	—	—
■Ratings										
Rated impulse withstand voltage〔U_{imp}〕 kV			6	6	6	6	6	8	8	8
Rated current, A Calibrated at 40°C			5 20 10 30 15	15 40 20 50 30	60	60 75 100	125	125 200 150 225 175	250	250 400 300 350
Rated operational voltage AC V	Instantaneous tripping type		100-440 common	100-440 common	100-440 common	100-440 common	100-440 common	100-440 common	100-440 common	100-440 common
	Operable voltage fluctuation range V		80-484	80-484	80-484	80-484	80-484	80-484	80-484	80～484
	Time delay tripping type		—	—	—	—	—	100-440 common	100-440 common	100-440 common
	Operable voltage fluctuation range V		—	—	—	—	—	80-484	80-484	80～484
Rated sensitivity current mA	Instantaneous tripping type		15 30 —	15 ㉝ 30 100/200/500 selectable ㊶	30 100/200/500 selectable —	30 100/200/500 selectable —	30 100/200/500 selectable —	30 100/200/500 selectable —	30 100/200/500 selectable —	30 100/200/500 selectable —
	Max. operating time sec		0.1	0.1	0.1	0.1	0.1	0.1	0.1	0.1
	Time delay tripping type		—	—	—	—	—	100/200/500 selectable	100/200/500 selectable	100/200/500 selectable
	Max. operating time sec		—	—	—	—	—	0.45/1.0/2.0 selectable	0.45/1.0/2.0 selectable	0.45/1.0/2.0 selectable
	Non-operating time sec		—	—	—	—	—	0.1/0.5/1.2 or more	0.1/0.5/1.2 or more	0.1/0.5/1.2 or more
■Rated breaking capacity, kA										
JIS C 8201-2-2 Ann.2 I_{cu}(sym)	AC	440V	1.5	2.5	2.5	10	10	15	15	22
		415V	1.5	2.5	2.5	10	10	25	25	25
		240V	2.5	7.5	7.5	30	30	35	35	35
		100V	2.5	7.5	7.5	30	30	35	35	35
■External dimensions, mm										
		a	75	75	75	75	75	105	105	140
		b	130	130	130	130	130	165	165	260
		c	68	68	68	68	68	68	68	103
		d	90	90	90	90	90	95	95	145
Weight (◉ marked standard type) kg			0.8	0.8	0.9	0.9	0.9	1.7	1.7	5.2
■Connections and Mountings										
Front-connected (FC)	Terminal screws		◉ ㊺	◉ ㊺	◉	◉	◉	◉	◉	◉
	With extension bars		○ ㊸	○ ㊸	○ ㊸	○ ㊸	○ ㊸	○ ㊸	○ ㊸	○
Rear-connected (RC)	Flat bar studs		○	○	○	○	○	○	○	○
Plug-in (PM) For switchboards	High-performance (PMB)		—	—	—	—	—	—	—	—
	Standard (PMC)		—	—	—	—	—	—	—	—
For distribution boards (PMD)			—	—	—	—	—	—	—	—
Flush-mounted (FP)	With flat bar studs		○	○	○	○	○	○	○	○
Draw-out type (DR)			—	—	—	—	—	—	—	—
TemPlug70 (PG)			—	—	—	—	—	○	○	○
DIN rail mount			○ ⑪	○ ⑪	○ ⑪	○ ⑪	○ ⑪	—	—	—
■Accessories (optional)		Symbol								
Internally mounted	Auxiliary switch	A X	●	●	●	●	●	●	●	●
	Alarm switch	A L	●	●	●	●	●	●	●	●
	Shunt trips	S H	—	—	—	—	—	—	—	—
	Undervoltage trips	U V	—	—	—	—	—	—	—	—
	Test lead	T L	—	—	—	—	—	●	●	●
	Leakage alarm switch	L A	—	—	—	—	—	—	—	—
	Megger test switch	M G	—	—	—	—	—	●	●	●
Externally mounted	Motor operator	M C	—	—	—	—	—	●	●	●
	External operating handle: Breaker-mounted	H B	●	●	●	●	●	●	●	●
	External operating handle: Door-mounted (variable depth)	H P	●	●	●	●	●	●	●	●
	Toggle extension	H A	—	—	—	—	—	—	—	●
	Mechanical interlock: Slide type	M S	●	●	●	●	●	●	●	●
	Mechanical interlock: Link type	M L	—	—	—	—	—	—	—	—
	Mechanical interlock: Wire type	M W	—	—	—	—	—	—	—	—
	Toggle holder	H H	●	●	●	●	●	●	●	●
	Toggle lock	H L	●	●	●	●	●	●	●	
	Terminal cover: For front-connected	C F	●	●	●	●	●	●	●	●
	Terminal cover: For rear-connected and plug-in	C R	●	●	●	●	●	●	●	●
	Terminal block for lead	T F	●	●	●	●	●	●	●	●
	Door flange	D F	—	—	—	—	—	—	—	—
CE marking			Non	Non	Non	Non	Non	Non	Non	Non
Earth leakage trip mechanism (Current operation type)			Electronic	Electronic	Electronic	Electronic	Electronic	Electronic	Electronic	Electronic
Overcurrent trip mechanism			Thermal-magnetic ⑦	Thermal-magnetic	Thermal-magnetic	Thermal-magnetic	Thermal-magnetic	Thermal-magnetic	Thermal-magnetic	Thermal-magnetic
Earth leakage indication			Mechanical button	Mechanical button	Mechanical button	Mechanical button	Mechanical button	Mechanical button	Mechanical button	Mechanical button
Colour of cover			Grey Blue	Grey Blue	Grey Blue	Grey Blue	Grey Blue	Grey Blue	Grey Blue	Grey Blue
Trip button (Colour)			Yes (Red)	Yes (Red)	Yes (Red)	Yes (Red)	Yes (Red)	Yes (Red)	Yes (Red)	Yes (Red)
Suitability for isolation			Yes	Yes	Yes	Yes	Yes	Yes	Yes	Yes
Reverse connection			Non	Non	Non	Non	Non	Yes	Yes	Yes ㉒
Page of characteristics and outline dimensions			7-174	7-174	7-178	7-178	7-178	7-186	7-186	7-192

Notes:

◉ : Standard. This configuration used unless otherwise specified. ○ : Optional standard. Specify when ordering. ● : "yes" or "available".
— : "no" or "not available". ⑦ : Hydraulic-magnetic type for below 10A rating. ⑪ : Please order the DIN rail adapter separately. See page 6-152.
⑭ : When applying 3-pole type to a 1ø2W circuit, use both ends and do not use the central pole.
⑮ : When applying 3-pole type to a 1ø3W circuit, apply voltage to both ends and connect the neutral wire to the central pole. ㉝ : Applicable to 15A to 30A.
㊲ : If the megger test switch is mounted, the auxiliary switch cannot be mounted. ㊶ : Not applicable to 20 A or less. ㊺ : A wire clamping terminal is provided.
㊾ : If an earth leakage alarm switch is mounted, the megger test switch cannot be mounted. ㊸ : For the extension bars, please place the order separately in parts.
Remarks: The rated sensitivity current is set to 100mA and the time delay tripping type's operating time is set to 0.45 seconds before delivery.

2 Ratings and Specifications

Earth Leakage Circuit Breakers

15 Standard series (Harmonics/surge with countermeasure)

Frame size (A)			30	50	50	60	100	125	225	250
Type			PZS30-NF	PZS50-NF	ZS50-SF	PZS60-NF	ZS125-SF		ZS250-SF	
Number of poles			3	3	3	3	3	3	3	3
Phase and wires	1ø2W	⑭	●	●	●	●	●	●	●	●
	3ø3W, 1ø3W	⑮	●	●	●	●	●	●	●	●
	3ø4W		—	—	—	—	—	—	—	—
■Ratings										
Rated impulse withstand voltage〔U_{imp}〕 kV			6	6	8	6	8	8	8	8
Rated current, A Calibrated at 40°C			5 20 10 30 15	15 40 20 50 30	15 40 20 50 30	60	15 40 75 20 50 100 30 60	125	125 200 150 225 175	250
Rated operational voltage AC V	Instantaneous tripping type		100-440 common	100-440 common	100-440 common	100-440 common	100-440 common	100-440 common	100-440 common	100-440 common
	Operable voltage fluctuation range V		80-484	80-484	80～484	80-484	80～484	80～484	80～484	80～484
	Time delay tripping type		—	—	100-440 common	—	100-440 common	100-440 common	100-440 common	100-440 common
	Operable voltage fluctuation range V		—	—	80～484	—	80～484	80～484	80～484	80～484
Rated sensitivity current mA	Instantaneous tripping type		15 30 100/200/500 selectable ㊶	15 ㉝ 30 100/200/500 selectable ㊶	30 100/200/500 selectable —	30 100/200/500 selectable —	30 100/200/500 selectable —	30 100/200/500 selectable —	30 100/200/500 selectable —	30 100/200/500 selectable —
	Max. operating time sec		0.1	0.1	0.1	0.1	0.1	0.1	0.1	0.1
	Time delay tripping type		—	—	100/200/500 selectable	—	100/200/500 selectable	100/200/500 selectable	100/200/500 selectable	100/200/500 selectable
	Max. operating time sec		—	—	0.45/1.0/2.0 selectable	—	0.45/1.0/2.0 selectable	0.45/1.0/2.0 selectable	0.45/1.0/2.0 selectable	0.45/1.0/2.0 selectable
	Non-operating time sec		—	—	0.1/0.5/1.2 or more	—	0.1/0.5/1.2 or more	0.1/0.5/1.2 or more	0.1/0.5/1.2 or more	0.1/0.5/1.2 or more
■Rated breaking capacity, kA										
JIS C 8201-2-2 Ann.2 I_{cu}(sym)	AC	440V	2.5	7.5	25	10	25	25	30	30
		415V	2.5	7.5	30	10	30	30	40	40
		240V	7.5	15	50	30	50	50	85	85
		100V	7.5	15	50	30	50	50	85	85
■External dimensions, mm										
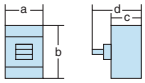		a	75	75	75	75	75	75	105	105
		b	130	130	130	130	130	130	165	165
		c	68	68	68	68	68	68	68	68
		d	90	90	95	90	95	95	95	95
Weight (◉ marked standard type) kg			0.8	0.8	0.95	0.9	0.95	0.95	1.7	1.7
■Connections and Mountings										
Front-connected (FC)	Terminal screws		◉ ㊺	◉ ㊺	◉ ㊺	◉	◉ ④	◉	◉	◉
	With extension bars		○ ㊸	○ ㊸	○ ㊸	○ ㊸	○ ㊸	○ ㊸	○ ㊸	○ ㊸
Rear-connected (RC)	Flat bar studs		○	○	○	○	○	○	○	○
Plug-in (PM) For switchboards	High-performance (PMB)		—	—	—	—	—	—	—	—
	Standard (PMC)		—	—	—	—	—	—	—	—
For distribution boards (PMD)			—	—	—	—	—	—	—	—
Flush-mounted (FP)	With flat bar studs		○	○	○	○	○	○	○	○
Draw-out type (DR)			—	—	—	—	—	—	—	—
TemPlug70 (PG)			—	—	○	—	○	○	○	○
DIN rail mount			○ ⑪	○ ⑪	○ ⑪	○ ⑪	○ ⑪	○ ⑪	—	—
■Accessories (optional)		Symbol								
Internally mounted	Auxiliary switch	A X	●	●	●	●	●	●	●	●
	Alarm switch	A L	●	●	●	●	●	●	●	●
	Shunt trips	S H	—	—	—	—	—	—	—	—
	Undervoltage trips	U V	—	—	—	—	—	—	—	—
	Test lead	T L	—	—	●	—	●	●	●	●
	Leakage alarm switch	L A	—	—	—	—	—	—	—	—
	Megger test switch	M G	—	—	●	—	●	●	●	●
Externally mounted	Motor operator	M C	—	—	—	—	—	—	●	●
	External operating handle: Breaker-mounted	H B	●	●	●	●	●	●	●	●
	External operating handle: Door-mounted (variable depth)	H P	●	●	●	●	●	●	●	●
	Toggle extension	H A	—	—	—	—	—	—	—	—
	Mechanical interlock: Slide type	M S	●	●	●	●	●	●	●	●
	Mechanical interlock: Link type	M L	—	—	—	—	—	—	—	—
	Mechanical interlock: Wire type	M W	—	—	—	—	—	—	—	—
	Toggle holder	H H	●	●	●	●	●	●	●	●
	Toggle lock	H L	●	●	●	●	●	●	●	●
	Terminal cover: For front-connected	C F	●	●	●	●	●	●	●	●
	Terminal cover: For rear-connected and plug-in	C R	●	●	●	●	●	●	●	●
	Terminal block for lead	T F	●	●	●	●	●	●	●	●
	Door flange	D F	—	—	—	—	—	—	—	—
CE marking			Non	Non	Non	Non	Non	Non	Non	Non
Earth leakage trip mechanism (Current operation type)			Electronic	Electronic	Electronic	Electronic	Electronic	Electronic	Electronic	Electronic
Overcurrent trip mechanism			Thermal-magnetic ⑦	Thermal-magnetic	Thermal-magnetic	Thermal-magnetic	Thermal-magnetic	Thermal-magnetic	Thermal-magnetic	Thermal-magnetic
Earth leakage indication			Mechanical button	Mechanical button	Mechanical button	Mechanical button	Mechanical button	Mechanical button	Mechanical button	Mechanical button
Colour of cover			Grey Blue	Grey Blue	Grey Blue	Grey Blue	Grey Blue	Grey Blue	Grey Blue	Grey Blue
Trip button (Colour)			Yes (Red)	Yes (Red)	Yes (Red)	Yes (Red)	Yes (Red)	Yes (Red)	Yes (Red)	Yes (Red)
Suitability for isolation			Yes	Yes	Yes	Yes	Yes	Yes	Yes	Yes
Reverse connection			Non	Non	Yes ㉒	Non	Yes ㉒	Yes ㉒	Yes	Yes
Page of characteristics and outline dimensions			7-174	7-174	7-176	7-178	7-180	7-180	7-186	7-186

Notes:

◉ : Standard. This configuration used unless otherwise specified. ○ : Optional standard. Specify when ordering.
● : "yes" or "available". — : "no" or "not available". ④ : 50A or less is the M5 wire clamping terminal.
⑦ : Hydraulic-magnetic type for below 10A rating. ⑪ : Please order the DIN rail adapter separately. See page 6-152.
⑭ : When applying 3-pole type to a 1ø2W circuit, use both ends and do not use the central pole.
⑮ : When applying 3-pole type to a 1ø3W circuit, apply voltage to both ends and connect the neutral wire to the central pole.
㉝ : Applicable to 15A to 30A. ㊶ : Not applicable to 20 A or less.
㊺ : A wire clamping terminal is provided. ㊸ : For the extension bars, please place the order separately in parts. ㉒ : There are some limitations. See page 5-23 for details.
Remarks: The rated sensitivity current is set to 100mA and the time delay tripping type's operating time is set to 0.45 seconds before delivery.

15 Standard series (Harmonics/surge with countermeasure)

Frame size (A)			400		600	630	600	630	800	800
Type			ZS400-NF		ZS630-CF		ZS630-NF		ZS800-CF	ZS800-NF
Number of poles			3	4	3	3	3	3	3	3
Phase and wires	1ø2W	⑭	●	—	●	●	●	●	●	●
	3ø3W, 1ø3W	⑮	●	—	●	●	●	●	●	●
	3ø4W		—	●	—	—	—	—	—	—
■Ratings										
Rated impulse withstand voltage〔U_{imp}〕 kV			8		8	8	8	8	8	8
Rated current, A Calibrated at 40°C			250 300 350	400	500 600	630	500 600	630	700 800	700 800
Rated operational voltage AC V	Instantaneous tripping type		100-440 common		100-440 common	100-440 common	100-440 common	100-440 common	100-440 common	100-440 common
	Operable voltage fluctuation range V		80～484		80～484	80～484	80～484	80～484	80～484	80～484
	Time delay tripping type		100-440 common		100-440 common	100-440 common	100-440 common	100-440 common	100-440 common	100-440 common
	Operable voltage fluctuation range V		80～484		80～484	80～484	80～484	80～484	80～484	80～484
Rated sensitivity current mA	Instantaneous tripping type		30		30	30	30	30	30	30
			100/200/500 selectable		100/200/500 selectable	100/200/500 selectable	100/200/500 selectable	100/200/500 selectable	100/200/500 selectable	100/200/500 selectable
			—		—	—	—	—	—	—
	Max. operating time sec		0.1		0.1	0.1	0.1	0.1	0.1	0.1
	Time delay tripping type		100/200/500 selectable		100/200/500 selectable	100/200/500 selectable	100/200/500 selectable	100/200/500 selectable	100/200/500 selectable	100/200/500 selectable
	Max. operating time sec		0.45/1.0/2.0 selectable		0.45/1.0/2.0 selectable	0.45/1.0/2.0 selectable	0.45/1.0/2.0 selectable	0.45/1.0/2.0 selectable	0.45/1.0/2.0 selectable	0.45/1.0/2.0 selectable
	Non-operating time sec		0.1/0.5/1.2 or more		0.1/0.5/1.2 or more	0.1/0.5/1.2 or more	0.1/0.5/1.2 or more	0.1/0.5/1.2 or more	0.1/0.5/1.2 or more	0.1/0.5/1.2 or more
■Rated breaking capacity, kA										
JIS C 8201-2-2 Ann.2 I_{cu}(sym)	AC	440V	45		30	30	45	45	30	45
		415V	50		36	36	50	50	36	50
		240V	85		50	50	85	85	50	85
		100V	85		50	50	85	85	50	85
■External dimensions, mm										
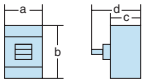		a	140	185	210	210	210	210	210	210
		b	260		273	273	273	273	273	273
		c	103		103	103	103	103	103	103
		d	145		145	145	145	145	145	145
Weight (◉ marked standard type) kg			5.2	6.6	10.0	10.0	10.0	10.0	11.0	11.0
■Connections and Mountings										
Front-connected (FC)	Terminal screws		◉		—	—	—	—	—	—
	With extension bars		○		◉	◉	◉	◉	◉	◉
Rear-connected (RC)	Flat bar studs		○		○	○	○	○	○	○
Plug-in (PM) For switchboards	High-performance (PMB)		—		—	—	—	—	—	—
	Standard (PMC)		—		—	—	—	—	—	—
For distribution boards (PMD)			—		—	—	—	—	—	—
Flush-mounted (FP)	With flat bar studs		○		○	○	○	○	○	○
Draw-out type (DR)			—		—	—	—	—	—	—
TemPlug70 (PG)			○	—	○	○	○	○	—	—
DIN rail mount			—		—	—	—	—	—	—
■Accessories (optional)		Symbol								
Internally mounted	Auxiliary switch	A X	●		●	●	●	●	●	●
	Alarm switch	A L	●		●	●	●	●	●	●
	Shunt trips	S H	—		—	—	—	—	—	—
	Undervoltage trips	U V	—		—	—	—	—	—	—
	Test lead	T L	●		●	●	●	●	●	●
	Leakage alarm switch	L A	—		—	—	—	—	—	—
	Megger test switch	M G	●		●	●	●	●	●	●
Externally mounted	Motor operator	M C	●		●	●	●	●	●	●
	External operating handle: Breaker-mounted	H B	●		●	●	●	●	●	●
	External operating handle: Door-mounted (variable depth)	H P	●		●	●	●	●	●	●
	Toggle extension	H A	●		●	●	●	●	●	●
	Mechanical interlock: Slide type	M S	●		●	●	●	●	●	●
	Mechanical interlock: Link type	M L	—		—	—	—	—	—	—
	Mechanical interlock: Wire type	M W	—		—	—	—	—	—	—
	Toggle holder	H H	●		●	●	●	●	●	●
	Toggle lock	H L								
	Terminal cover: For front-connected	C F	●		●	●	●	●	●	●
	Terminal cover: For rear-connected and plug-in	C R	●		●	●	●	●	●	●
	Terminal block for lead	T F	●		●	●	●	●	●	●
	Door flange	D F	—		—	—	—	—	—	—
CE marking			Non		Non	Non	Non	Non	Non	Non
Earth leakage trip mechanism (Current operation type)			Electronic		Electronic	Electronic	Electronic	Electronic	Electronic	Electronic
Overcurrent trip mechanism			Thermal-magnetic (adjustable)		Thermal-magnetic (adjustable)	Thermal-magnetic (adjustable)	Thermal-magnetic (adjustable)	Thermal-magnetic (adjustable)	Thermal-magnetic (adjustable)	Thermal-magnetic (adjustable)
Earth leakage indication			Mechanical button		Mechanical button	Mechanical button	Mechanical button	Mechanical button	Mechanical button	Mechanical button
Colour of cover			Grey Blue		Grey Blue	Grey Blue	Grey Blue	Grey Blue	Grey Blue	Grey Blue
Trip button (Colour)			Yes (Red)		Yes (Red)	Yes (Red)	Yes (Red)	Yes (Red)	Yes (Red)	Yes (Red)
Suitability for isolation			Yes		Yes	Yes	Yes	Yes	Yes	Yes
Reverse connection			Yes ⑫		Yes ⑫	Yes ⑫	Yes ⑫	Yes ⑫	Yes ⑫	Yes ⑫
Page of characteristics and outline dimensions			7-192		7-194	7-194	7-194	7-194	7-196	7-196

Notes:
◉ : Standard. This configuration used unless otherwise specified. ○ : Optional standard. Specify when ordering.
● : "yes" or "available". — : "no" or "not available".
⑭ : When applying 3-pole type to a 1ø2W circuit, use both ends and do not use the central pole.
⑮ : When applying 3-pole type to a 1ø3W circuit, apply voltage to both ends and connect the neutral wire to the central pole. ⑫ : There are some limitations. See page 5-23 for details.
Remarks: The rated sensitivity current is set to 100mA and the time delay tripping type's operating time is set to 0.45 seconds before delivery.

16 High-fault level series (Harmonics/surge with countermeasure)

Frame size (A)			100		125		225		250		400												
Type			ZS100-GF		ZS125-GF		ZS225-GF		ZS250-GF		ZS400-GF												
Number of poles			3	4	3	4	3	4	3	4	3	4											
Phase and wires	1ø2W	⑭	●	—	●	—	●	—	●	—	●	—											
	3ø3W, 1ø3W	⑮	●	—	●	—	●	—	●	—	●	—											
	3ø4W		—	●	—	●	—	●	—	●	—	●											
■Ratings																							
Rated impulse withstand voltage (Uimp) kV			8		8		8		8		8												
Rated current, A Calibrated at 40°C			15	50	125		125	225	250		250												
			20	60			150				300												
			30	75			175				350												
Rated operational voltage AC V	Instantaneous tripping type		40	100			200				400												
	Operable voltage fluctuation range V		100-440 common		100-440 common		100-440 common		100-440 common		100-440 common												
	Time delay tripping type		80～484		80～484		80～484		80～484		80～484												
	Operable voltage fluctuation range V		100-440 common		100-440 common		100-440 common		100-440 common		100-440 common												
Rated sensitivity current mA	Instantaneous tripping type		80～484		80～484		80～484		80～484		80～484												
			30		30		30		30		30												
			100/200/500 selectable		100/200/500 selectable		100/200/500 selectable		100/200/500 selectable		100/200/500 selectable												
	Max. operating time sec		0.1		0.1		0.1		0.1		0.1												
	Time delay tripping type		100/200/500 selectable		100/200/500 selectable		100/200/500 selectable		100/200/500 selectable		100/200/500 selectable												
	Max. operating time sec		0.45/1.0/2.0 selectable		0.45/1.0/2.0 selectable		0.45/1.0/2.0 selectable		0.45/1.0/2.0 selectable		0.45/1.0/2.0 selectable												
	Non-operating time sec		0.1/0.5/1.2 or more		0.1/0.5/1.2 or more		0.1/0.5/1.2 or more		0.1/0.5/1.2 or more		0.1/0.5/1.2 or more												
■Rated breaking capacity, kA																							
JIS C 8201-2-2 Ann.2 Icu(sym)	AC	440V	50		50		50		50		65												
		415V	65		65		65		65		70												
		240V	85		85		85		85		100												
		100V	85		85		85		85		100												
■External dimensions, mm																							
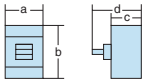		a	90	120	90	120	105	140	105	140	140	185											
		b	155		155		165		165		260												
		c	68		68		68		68		103												
		d	92		92		92		92		145												
Weight (◉ marked standard type) kg			1.3	1.7	1.3	1.7	1.7	2.1	1.7	2.1	5.2	6.6											
■Connections and Mountings																							
Front-connected (FC)	Terminal screws		◉		◉		◉		◉		◉												
	With extension bars		○ ⑤③		○ ⑤③		○ ⑤③		○ ⑤③		○												
Rear-connected (RC)	Flat bar studs		○		○		○		○		○												
Plug-in (PM) For switchboards	High-performance (PMB)		—		—		—		—		—												
	Standard (PMC)		—		—		—		—		—												
For distribution boards (PMD)			—		—		—		—		—												
Flush-mounted (FP)	With flat bar studs		○		○		○		○		○												
Draw-out type (DR)			—		—		—		—		—												
TemPlug70 (PG)			○	—	○	—	○	—	○	—	○	—											
DIN rail mount			○ ⑪		○ ⑪		—		—		—												
■Accessories (optional)		Symbol																					
Internally mounted	Auxiliary switch	A X	●		●		●		●		●												
	Alarm switch	A L	●		●		●		●		●												
	Shunt trips	S H	—		—		—		—		—												
	Undervoltage trips	U V	—		—		—		—		—												
	Test lead	T L	●		●		●		●		●												
	Leakage alarm switch	L A	—		—		—		—		—												
	Megger test switch	M G	●		●		●		●		●												
Externally mounted	Motor operator	M C	●		●		●		●		●												
	External operating handle: Breaker-mounted	H B	●		●		●		●		●												
	External operating handle: Door-mounted (variable depth)	H P	●		●		●		●		●												
	Toggle extension	H A	—		—		—		—		●												
	Mechanical interlock: Slide type	M S	●		●		●		●		●												
	Mechanical interlock: Link type	M L	—		—		—		—		—												
	Mechanical interlock: Wire type	M W	—		—		—		—		—												
	Toggle holder	H H	●		●		●		●		●												
	Toggle lock	H L	●		●		●		●														
	Terminal cover: For front-connected	C F	●		●		●		●		●												
	Terminal cover: For rear-connected and plug-in	C R	●		●		●		●		●												
	Terminal block for lead	T F	●		●		●		●		●												
	Door flange	D F	—		—		—		—		—												
CE marking			Non		Non		Non		Non		Non												
Earth leakage trip mechanism (Current operation type)			Electronic		Electronic		Electronic		Electronic		Electronic												
Overcurrent trip mechanism			Thermal-magnetic		Thermal-magnetic		Thermal-magnetic		Thermal-magnetic		Thermal-magnetic (adjustable)												
Earth leakage indication			Mechanical button		Mechanical button		Mechanical button		Mechanical button		Mechanical button												
Colour of cover			Grey Blue		Grey Blue		Grey Blue		Grey Blue		Grey Blue												
Trip button (Colour)			Yes (Red)		Yes (Red)		Yes (Red)		Yes (Red)		Yes (Red)												
Suitability for isolation			Yes		Yes		Yes		Yes		Yes												
Reverse connection			Yes ⑫②		Yes ⑫②		Yes ⑫②		Yes ⑫②		Non												
Page of characteristics and outline dimensions			7-182		7-184		7-188		7-190		7-192												

Notes:

◉ : Standard. This configuration used unless otherwise specified. ○ : Optional standard. Specify when ordering. ● : "yes" or "available".

— : "no" or "not available". ⑪ : Please order the DIN rail adapter separately. See page 6-152.

⑭ : When applying 3-pole type to a 1ø2W circuit, use both ends and do not use the central pole.

⑮ : When applying 3-pole type to a 1ø3W circuit, apply voltage to both ends and connect the neutral wire to the central pole.

⑤③ : For the extension bars, please place the order separately in parts.

⑫② : There are some limitations. See page 5-23 for details.

Remarks: The rated sensitivity current is set to 100mA and the time delay tripping type's operating time is set to 0.45 seconds before delivery.

Earth Leakage Circuit Breakers

17 Earth Leakage Circuit Breakers for motor protection (Harmonics/surge with countermeasure)

Frame size (A)	30	30	50	50	100	100	225
Type	ZE30-NM	ZS30-NM	ZE50-NM	ZS50-CM	ZE100-NM	ZS100-SM	ZS250-SM
Number of poles	3	3	3	3	3	3	3
■Ratings							
Rated capacity of motor and rated current of circuit breaker Calibrated at 40°C	(A) (kW) 200V 415V	(A) (kW) 200V 415V	(A) (kW) 200V 415V	(A) (kW) 200V 415V / (A) (kW) 200V 415V	(A) (kW) 200V 415V	(A) (kW) 200V 415V	(A) (kW) 200V 415V
	1.4 0.2 0.4	0.7 — 0.2	45 11 22	0.7 — 0.2	60 15 30	16 3.7 7.5	125 30 —
	2.6 0.4 —	1.4 0.2 0.4		1.4 0.2 0.4	75 18.5 37	24 5.5 11	150 37 75
	4 0.75 1.5	2 — 0.75		2 — 0.75	90 22 45	32 7.5 15	175 45 90
	5 1 2.2	2.6 0.4 —		2.6 0.4 —		40 — 18.5	225 55 110
	8 1.5 3.7	4 0.75 1.5		4 0.75 1.5		45 11 22	
	10 2.2 —	5 1 2.2		5 1 2.2		60 15 30	
	16 3.7 7.5	8 1.5 3.7		8 1.5 3.7		75 18.5 37	
	24 5.5 11	10 2.2 —		10 2.2 —		90 22 45	
	32 7.5 15	12 — 5.5		12 — 5.5		100 — 55	
		16 3.7 7.5		16 3.7 7.5			
Remarks: Select according to the full load current of the motor.		24 5.5 11		24 5.5 11			
		32 7.5 15		32 7.5 15			
Rated impulse withstand voltage [U_{imp}] kV	6	6	6	6	6	8	8
Rated operational voltage AC V — Instantaneous tripping type	100-440 common	100-440 common	100-440 common	100-440 common	100-440 common	100-440 common	100-440 common
Rated operational voltage AC V — Operable voltage fluctuation range V	80～484	80～484	80～484	80～484	80～484	80～484	80～484
Rated sensitivity current mA — Instantaneous tripping type	30	30	30	30	30	30	30
Rated sensitivity current mA	100	100/200/500 selectable	100/200 selectable	100/200/500 selectable	100/200/500 selectable	100/200/500 selectable	100/200/500 selectable
Max. operating time sec	0.1	0.1	0.1	0.1	0.1	0.1	0.1
■Rated breaking capacity, kA							
JIS C 8201-2-2 Ann.2 AC 440V	1.5	2.5	2.5	7.5	10	25	30
I_{cu}(sym) 415V	1.5	2.5	2.5	7.5	10	30	40
240V	2.5 ⑥⑨	5 ⑥⑨	5 ⑥⑨	10 ⑥⑨	25 ⑥⑨	50	85
100V	5	5	5	10	25	50	85
■External dimensions, mm							
a	75	75	75	75	75	75	105
b	100	100	100	100	100	130	165
c	60	60	60	60	60	68	68
d	84	84	84	84	84	95	95
Weight (◉ marked standard type) kg	0.5	0.5	0.5	0.5	0.5	0.95	1.7
■Connections and Mountings							
Front-connected (FC) — Terminal screws	◉ ④⑤	◉ ④⑤	◉ ④⑤	◉ ④⑤	◉	◉ ④	◉
Front-connected (FC) — With extension bars	○ ⑤③	○ ⑤③	○ ⑤③	○ ⑤③	○ ⑤③	○ ⑤③	○ ⑤③
Rear-connected (RC) — Flat bar studs	○	○	○	○	○	○	○
Plug-in (PM) For switchboards — High-performance (PMB)	—	—	—	—	—	—	—
Plug-in (PM) For switchboards — Standard (PMC)	—	—	—	—	—	—	—
Plug-in (PM) For distribution boards (PMD)	—	—	—	—	—	—	—
Flush-mounted (FP) — With flat bar studs	○	○	○	○	○	○	○
Draw-out type (DR)	—	—	—	—	—	—	—
TemPlug70 (PG)	—	—	—	—	—	○	○
DIN rail mount	◉	◉	◉	◉	◉	○ ⑪	—
■Accessories (optional) — Symbol							
Internally mounted: Auxiliary switch A X	●	●	●	●	●	●	●
Internally mounted: Alarm switch A L	●	●	●	●	●	●	●
Internally mounted: Shunt trips S H	● ⑥⑧	● ⑥⑧	● ⑥⑧	● ⑥⑧	● ⑥⑧	—	—
Internally mounted: Undervoltage trips U V	● ⑥⑧	● ⑥⑧	● ⑥⑧	● ⑥⑧	● ⑥⑧	—	—
Internally mounted: Test lead T L	●	●	●	●	●	●	●
Internally mounted: Megger test switch M G	●	●	●	●	●	●	●
Externally mounted: Motor operator M C	—	—	—	—	—	—	●
Externally mounted: External operating handle — Breaker-mounted H B	△	△	△	△	△	●	●
Externally mounted: External operating handle — Door-mounted (variable depth) H P	△	△	△	△	△	●	●
Externally mounted: Toggle extension H A	—	—	—	—	—	—	—
Externally mounted: Mechanical interlock — Slide type M S	●	●	●	●	●	●	●
Externally mounted: Mechanical interlock — Rear-connected type M B	—	—	—	—	—	—	—
Externally mounted: Mechanical interlock — Link type M L	—	—	—	—	—	—	—
Externally mounted: Mechanical interlock — Wire type M W	—	—	—	—	—	—	—
Externally mounted: Toggle holder H H	—	—	—	—	—	●	●
Externally mounted: Toggle lock H L	●	●	●	●	●	●	●
Externally mounted: Terminal cover — For front-connected C F	●	●	●	●	●	●	●
Externally mounted: Terminal cover — For rear-connected and plug-in C R	● ②	● ②	● ②	● ②	● ②	●	●
Externally mounted: Terminal block for lead T F	●	●	●	●	●	●	●
Externally mounted: Door flange D F	—	—	—	—	—	—	—
CE marking	Non	Non	Non	Non	Non	Non	Non
Earth leakage trip mechanism (Current operation type)	Electronic	Electronic	Electronic	Electronic	Electronic	Electronic	Electronic
Overcurrent trip mechanism	Hydraulic-magnetic type	Hydraulic-magnetic type	Hydraulic-magnetic type	Hydraulic-magnetic type	Hydraulic-magnetic type	Thermal-magnetic	Thermal-magnetic
Earth leakage indication	Mechanical button	Mechanical button	Mechanical button	Mechanical button	Mechanical button	Mechanical button	Mechanical button
Colour of cover	Light Grey	Light Grey	Light Grey	Light Grey	Light Grey	Grey Blue	Grey Blue
Trip button (Colour)	Yes (Red)	Yes (Red)	Yes (Red)	Yes (Red)	Yes (Red)	Yes (Red)	Yes (Red)
Suitability for isolation	Yes	Yes	Yes	Yes	Yes	Yes	Yes
Reverse connection	Non	Non	Non	Non	Non	Yes ⑦②	Yes
Page of characteristics and outline dimensions	7-198	7-198	7-198	7-198	7-200	7-202	7-204

Notes:

◉ : Standard. This configuration used unless otherwise specified. ○ : Optional standard. Specify when ordering. ● : "yes" or "available". — : "no" or "not available".

△ : Custom-built product. Please contact us for details. ② : Supplied as standard. ④ : 50A or less is the M5 wire clamping terminal.

⑪ : Please order the DIN rail adapter separately. See page 6-152. ④⑤ : A wire clamping terminal is provided. ⑤③ : For the extension bars, please place the order separately in parts.

⑥⑧ : It is mounted on the side of the circuit breaker. In the case of Flush-mounted type (FP), it cannot be installed. ⑥⑨ : This is the value for 230V AC.

⑦② : There are some limitations. See page 5-23 for details.

Remarks: The rated sensitivity current is set to 100mA before delivery.

18 Single phase 3-wire earth leakage circuit breaker with neutral phase open protection (Harmonics/surge with countermeasure)

Frame size (A)		50	100	125	100	125	225	250
Type		PZE50-NFN	PZE125-NFN		ZNS125-SF		ZNE250-SF	
Number of poles / Elements		3P3E ㊵	3P3E ㊵	3P3E ㊵	3P3E ㊵	3P3E ㊵	3P3E ㊵	3P3E ㊵
Phase and wires		1ø3W	1ø3W	1ø3W	1ø3W	1ø3W	1ø3W	1ø3W
■Ratings								
Rated current, A		15 40	60	125	15 40 75	125	125 225	250
Calibrated at 40°C		20 50	75		20 50 100		150	
		30	100		30 60		175	
							200	
Rated operational voltage AC V		100/200	100/200	100/200	100/200	100/200	100/200	100/200
Rated impulse withstand voltage (U_imp) kV		6	6	6	8	8	8	8
Rated sensitivity current mA	Instantaneous tripping type	30	30	30	30	30	30	30
			100/200/500 selectable	100/200/500 selectable	100/200/500 selectable	100/200/500 selectable	100/200/500 selectable	100/200/500 selectable
	Max. operating time sec	0.1	0.1	0.1	0.1	0.1	0.1	0.1
	Time delay tripping type	—	—	—	100/200/500 selectable	100/200/500 selectable	100/200/500 selectable	100/200/500 selectable
	Max. operating time sec	—	—	—	0.45	0.45	0.45	0.45
	Non-operating time sec	—	—	—	0.1	0.1	0.1	0.1
Single 3-phase neutral wire open phase protection characteristics	Rated operating overvoltage AC V	135	135	135	135	135	135	135
	Rated non-operating overvoltage AC V	120	120	120	120	120	120	120
	Rated overvoltage operating time (sec)	1 or less	1 or less	1 or less	1 or less	1 or less	1 or less	1 or less
■Rated breaking capacity, kA								
JIS C 8201-2-2 Ann.2 I_{cu} (sym)	AC 100/200V	10	25	25	50	50	35	35
■External dimensions, mm								
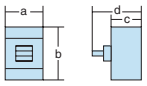	a	75	75	75	75	75	105	105
	b	130	130	130	130	130	165	165
	c	68	68	68	68	68	68	68
	d	90	90	90	95	95	95	95
Weight (◉ marked standard type) kg		0.8	0.9	0.9	0.95	0.95	1.7	1.7
■Connections and Mountings								
Front-connected (FC)	Terminal screws	◉ ㊺	◉	◉	◉ ④	◉	◉	◉
	With extension bars	○ ㊸	○ ㊸	○ ㊸	○ ㊸	○ ㊸	○ ㊸	○ ㊸
Rear-connected (RC)	Flat bar studs	△	△	△	△	△	△	△
DIN rail mount		○ ⑪	○ ⑪	○ ⑪	○ ⑪	○ ⑪	—	—
■Accessories (optional)		Symbol						
Internally mounted	Auxiliary switch	A X	●	●	●	●	●	●	●
	Alarm switch	A L	●	●	●	●	●	●	●
	Shunt trips	S H	—	—	—	—	—	—	—
	Undervoltage trips	U V	—	—	—	—	—	—	—
	Test lead	T L	—	—	—	●	●	●	●
	Megger test switch	M G	—	—	—	●	●	●	●
Externally mounted	Motor operator	M C	—	—	—	—	—	●	●
	External operating handle: Breaker-mounted	H B	●	●	●	●	●	●	●
	External operating handle: Door-mounted (variable depth)	H P	●	●	●	●	●	●	●
	Toggle extension	H A	—	—	—	—	—	—	—
	Mechanical interlock: Slide type	M S	●	●	●	●	●	●	●
	Mechanical interlock: Link type	M L	—	—	—	—	—	—	—
	Mechanical interlock: Wire type	M W	—	—	—	—	—	—	—
	Toggle holder	H H	●	●	●	●	●	●	●
	Toggle lock	H L	●	●	●	●	●	●	●
	Terminal cover: For front-connected	C F	●	●	●	●	●	●	●
	Terminal cover: For rear-connected	C R	●	●	●	●	●	●	●
	Terminal block for lead	T F	●	●	●	●	●	●	●
	Door flange	D F	—	—	—	—	—	—	—
CE marking			Non	Non	Non	Non	Non	Non	Non
Earth leakage trip mechanism (Current operation type)			Electronic	Electronic	Electronic	Electronic	Electronic	Electronic	Electronic
Overcurrent trip mechanism			Thermal-magnetic	Thermal-magnetic	Thermal-magnetic	Thermal-magnetic	Thermal-magnetic	Thermal-magnetic	Thermal-magnetic
Overvoltage / Earth leakage indication			Mechanical button	Mechanical button	Mechanical button	Mechanical button	Mechanical button	Mechanical button	Mechanical button
Colour of cover			Grey Blue	Grey Blue	Grey Blue	Grey Blue	Grey Blue	Grey Blue	Grey Blue
Trip button (Colour)			Yes (Red)	Yes (Red)	Yes (Red)	Yes (Red)	Yes (Red)	Yes (Red)	Yes (Red)
Suitability for isolation			Yes	Yes	Yes	Yes	Yes	Yes	Yes
Reverse power flow circuit			Non	Non	Non	Yes ㊺	Yes ㊺	Yes ㊺	Yes ㊺
Page of characteristics and outline dimensions			7-206	7-206	7-206	7-208	7-208	7-210	7-210

Notes:

◉ : Standard. This configuration used unless otherwise specified.
○ : Optional standard. Specify when ordering.
● : "yes" or "available". — : "no" or "not available". △ : Custom-built product. Please contact us for details.
④ : 50A or less is the M5 wire clamping terminal.
⑪ : Please order the DIN rail adapter separately. See page 6-152.
㊵ : They can also be applied to circuits where overcurrent flows in the neutral wire. Can be used as a main circuit breaker for photovoltaic power generation systems. See page 3-27 for details.
㊺ : A wire clamping terminal is provided.
㊸ : For the extension bars, please place the order separately in parts.
㊺ : Since the overvoltage and earth leakage detection circuit has a continuous rating specification, there is no need to turn off the power of the detection circuit using a megger test switch, etc.

Remarks: See pages 3-25 and 3-26 for connection details.

18 Single phase 3-wire earth leakage circuit breaker with neutral phase open protection (Harmonics/surge with countermeasure)

Frame size (A)		225	250	400	400				
Type		ZNS250-SF		ZNE400-NF	ZNS400-NF				
Number of poles / Elements		3P3E ㊵	3P3E ㊵	3P2E ⑱	3P2E ⑱				
Phase and wires		1ø3W	1ø3W	1ø3W	1ø3W				
■Ratings									
Rated current, A		125 225	250	250	250				
Calibrated at 40°C		150		300	300				
		175		350	350				
		200		400	400				
Rated operational voltage AC V		100/200	100/200	100/200	100/200				
Rated impulse withstand voltage 〔U_{imp}〕 kV		8	8	8	8				
Rated sensitivity current mA	Instantaneous tripping type	30	30	30	30				
		100/200/500 selectable	100/200/500 selectable	100/200/500 selectable	100/200/500 selectable				
	Max. operating time sec	0.1	0.1	0.1	0.1				
	Time delay tripping type	100/200/500 selectable	100/200/500 selectable	100/200/500 selectable	100/200/500 selectable				
	Max. operating time sec	0.45	0.45	0.45	0.45				
	Non-operating time sec	0.1	0.1	0.1	0.1				
Single 3-phase neutral wire open phase protection characteristics	Rated operating overvoltage AC V	135	135	135	135				
	Rated non-operating overvoltage AC V	120	120	120	120				
	Rated overvoltage operating time (sec)	1 or less	1 or less	1 or less	1 or less				
■Rated breaking capacity, kA									
JIS C 8201-2-2 Ann.2 I_{cu} (sym)	AC 100/200V	85	85	35	85				
■External dimensions, mm									
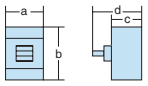	a	105	105	140	140				
	b	165	165	260	260				
	c	68	68	103	103				
	d	95	95	145	145				
Weight (◉ marked standard type) kg		1.7	1.7	5.2	5.2				
■Connections and Mountings									
Front-connected (FC)	Terminal screws	◉	◉	◉	◉				
	With extension bars	○ ㊸	○ ㊸	○	○				
Rear-connected (RC)	Flat bar studs	△	△	△	△				
DIN rail mount		—	—	—	—				
■Accessories (optional)	Symbol								
Internally mounted: Auxiliary switch	A X	●	●	●	●				
Internally mounted: Alarm switch	A L	●	●	●	●				
Internally mounted: Shunt trips	S H	—	—	—	—				
Internally mounted: Undervoltage trips	U V	—	—	—	—				
Internally mounted: Test lead	T L	●	●	●	●				
Internally mounted: Megger test switch	M G	●	●	●	●				
Externally mounted: Motor operator	M C	●	●	●	●				
Externally mounted: External operating handle, Breaker-mounted	H B	●	●	●	●				
Externally mounted: External operating handle, Door-mounted (variable depth)	H P	●	●	●	●				
Externally mounted: Toggle extension	H A	—	—	●	●				
Externally mounted: Mechanical interlock, Slide type	M S	●	●	●	●				
Externally mounted: Mechanical interlock, Link type	M L	—	—	—	—				
Externally mounted: Mechanical interlock, Wire type	M W	—	—	—	—				
Externally mounted: Toggle holder	H H	●	●	●	●				
Externally mounted: Toggle lock	H L	●	●						
Externally mounted: Terminal cover, For front-connected	C F	●	●	●	●				
Externally mounted: Terminal cover, For rear-connected	C R	●	●	●	●				
Externally mounted: Terminal block for lead	T F	●	●	●	●				
Externally mounted: Door flange	D F	—	—	—	—				
CE marking		Non	Non	Non	Non				
Earth leakage trip mechanism		Electronic	Electronic	Electronic	Electronic				
Overcurrent trip mechanism		Thermal-magnetic	Thermal-magnetic	Thermal-magnetic	Thermal-magnetic (adjustable)				
Overvoltage / Earth leakage indication		Mechanical button	Mechanical button	Mechanical button	Mechanical button				
Colour of cover		Grey Blue	Grey Blue	Grey Blue	Grey Blue				
Trip button (Colour)		Yes (Red)	Yes (Red)	Yes (Red)	Yes (Red)				
Suitability for isolation		Yes	Yes	Yes	Yes				
Reverse power flow circuit		Yes ㊺	Yes ㊺	Yes ㊺	Yes ㊺				
Page of characteristics and outline dimensions		7-210	7-210	7-212	7-212				

Notes:

◉ : Standard. This configuration used unless otherwise specified.
○ : Optional standard. Specify when ordering.
● : "yes" or "available". — : "no" or "not available". △ : Custom-built product. Please contact us for details.
⑱ : Do not apply to circuits where overcurrent flows in the neutral wire.
㊵ : They can also be applied to circuits where overcurrent flows in the neutral wire. Can be used as a main circuit breaker for photovoltaic power generation systems. See page 3-27 for details.
㊸ : For the extension bars, please place the order separately in parts.
㊺ : Since the overvoltage and earth leakage detection circuit has a continuous rating specification, there is no need to turn off the power of the detection circuit using a megger test switch, etc.

Remarks: See pages 3-25 and 3-26 for connection details.

19 Earth Leakage Circuit Breakers for distribution boards and control boards (Harmonics/surge with countermeasure)

Frame size (A)			30		50		50	50	100		
Type			TZ30EC		TZ50EE		TZ-51C	TZ-52C	TZ100EC		
Number of poles			2	3	2	3	2 ㊸㊹	2	3		
Phase and wires	1ø2W	⑭	●	●	●	●	●	●	●		
	3ø3W, 1ø3W	⑮	●(1ø3W)	●	●(1ø3W)	●	—	●(1ø3W)	●		
■Ratings											
Rated current, A			5	30	5	30	15	15	60		
Calibrated at 40°C			10		10	40	20	20	75		
			15		15	50	30	30	100		
			20		20						
Rated operational voltage	AC V		100-240		100-240		100	100-200	100-240		
			common		common			common	common		
	Operable voltage fluctuation range V		80～264		80～264		80～121	80～242	80～264		
Rated sensitivity current mA	Instantaneous tripping type		15, 30		15, 30, 100		15, 30	15, 30	30, 100		
	Max. operating time sec		0.1		0.1		0.1	0.1	0.1		
■Rated breaking capacity, kA											
JIS C 8201-2-2 Ann.2	AC	240V	2.5		5		—	—	5		
I_{cu} (sym)		200V	2.5		5		—	2.5	5		
		100/200V	2.5		5		—	5	5		
		100V	2.5		5		5	—	5		
■External dimensions, mm											
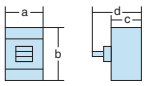		a	50	75	50	75	25	25	75		
		b	96		96		95	95	96		
		c	60		60		60	60	60		
		d	75		75		77	77	75		
Weight (◉ marked standard type) kg			0.4	0.5	0.4	0.5	0.15	0.16	0.5		
■Connections and Mountings											
Front-connected (FC)	Terminal screws		◉ ㊺		◉ ㊺		◉ ㊽	◉ ㊽	◉		
DIN rail mount			○ ㊷		○ ㊷		—	—	○ ㊷		
Clip-in chassis mount			◉		◉		◉	◉	◉		
■Accessories (optional)		Symbol									
Internally mounted	Auxiliary switch	A X	●		●		● ㊽	● ㊽	●		
	Alarm switch	A L	●		●		● ㊽	● ㊽	●		
	Test lead	T L	●		●		—	—	●		
	Leakage alarm switch	L A	—		—		—	—	—		
	Megger test switch	M G	● ㊲		● ㊲		—	—	● ㊲		
Externally mounted	Toggle holder	H H	●		●		●	●	●		
	Toggle lock	H L	—		—		—	—	—		
	Toggle cap	H C	—		—		●	●	—		
	Terminal cover For front-connected	C F	●		●		—	—	●		
	Terminal block for lead	T F	●		●		—	—	●		
CE marking			Non		Non		Non	Non	Non		
Earth leakage trip mechanism			Electronic		Electronic		Electronic	Electronic	Electronic		
Overcurrent trip mechanism			Hydraulic-magnetic type		Hydraulic-magnetic type		Thermal-magnetic	Thermal-magnetic	Hydraulic-magnetic type		
Earth leakage indication			Mechanical button		Mechanical button		Mechanical button	Mechanical button	Mechanical button		
Colour of cover			Grey		Grey		Black	Black	Grey		
Trip button (Colour)			Yes (Red)		Yes (Red)		Non	Non	Yes (Red)		
Reverse connection			Yes		Yes		Non	Non	Yes		
Page of characteristics and outline dimensions			7-214		7-214		7-218	7-218	7-216		

Notes:

◉ : Standard. This configuration used unless otherwise specified. ○ : Optional standard. Specify when ordering.
● : "yes" or "available". — : "no" or "not available".
⑭ : When applying 3-pole type to a 1ø2W circuit, use both ends and do not use the central pole.
⑮ : When applying 3-pole type to a 1ø3W circuit, apply voltage to both ends and connect the neutral wire to the central pole.
㊲ : If the megger test switch is mounted, the auxiliary switch cannot be mounted. ㊸ : This is 2-pole 1-element. ㊺ : A wire clamping terminal is provided.
㊽ : Distribution board branch conductors and busbar conductor supports are available. (Optional)
㊷ : Please order the DIN rail mounting bracket separately. (Order type: 50EE-RAIL, 1 set per unit)
㊹ : **TZ-51C** does not support harmonics or surges. Please use **TZ-52C** if necessary. ㊽ : The auxiliary switch and alarm switch cannot be applied at the same time.
Remarks: **TZ-51C** and **TZ-52C** types are compatible with **TB-51C** and **TB-52C**.

Earth Leakage Relays

20 TZS series (Harmonics/surge with countermeasure)

Category		Separate type	
		High-sensitivity Instantaneous tripping type	Medium sensitivity Instantaneous tripping / time delay tripping type
Type		TZS-15HD ⑧ TZS-24HD TZS-40HD TZS-68HD TZS-100HD	TZS-15MD ⑨ TZS-24MD TZS-40MD TZS-68MD TZS-100MD
Phase and wires ①	1ø2W, 1ø3W	●	●
	3ø3W, 3ø4W	●	●
Outside view The monitor (ZCT) is shown in the table below.			
■Ratings			
Rated control voltage, V AC②		100 selectable ③④ 200	100 selectable ③④ 200
Applicable range V	AC100	80～132	80～132
	AC200	160～264	160～264
Rated sensitivity current [mA]		30	100 200 500 1000 selectable
Rated operating time (sec)		0.1 or less	0.1 or less 0.3 0.5 selectable ⑤ 1 2
External dimensions mm Width × Height × Depth		60×78×100	60×78×100
Weight (FC) kg		0.22	0.22
■Connections and Mountings			
Front-connected (FC)		◉	◉
Flush-mounted (FP)		○	○
■Standard features			
Earth leakage detection (Current operation type)		Electronic	Electronic
Output contact ⑥		1C	1C
Earth leakage indication		LED (Red)	LED (Red)
Reset function		Push button ⑦	Push button ⑦
Power source required		1VA or more	1VA or more
CE marking		Non ⑩	Non ⑩
Page of characteristics and outline dimensions		7-243	7-243

Notes:

◉: Standard. This configuration used unless otherwise specified.
○: Specify when ordering.
●: "yes" or "available".
①: Can also be applied to the ground wire.
②: Applicable rated voltage For 100V: 100 to 120V, For 200V: 200 to 240V
③: Terminals for 100V AC and 200V AC are provided.

Caution: do not apply 100V AC to the 200V AC terminal., burnout can result.

④: For 415V AC or 440V AC, please contact TERASAKI.
⑤: Operating time range and Non-operating time range.

Rated operating time (sec)	Operating time range (sec)	Non-operating time range (sec)
0.1 or less	0.1 or less	—
0.3	0.2～0.36	0.15
0.5	0.4～0.6	0.38
1	0.8～1.2	0.7
2	1.3～2	1.25

⑥: Ratings of output contact.

Voltage	COSø=1	COSø=0.4 (L/R=7ms)	Minimum load
120V AC	6A	3.5A	5V DC 10mA
240V AC	6A	3.5A	
30V DC	6A	3A	

⑦: The output contacts remain operational until the RESET button is pressed. If the control power supply fails, the contacts automatically reset.
⑧: Type of the relay displayed is TZS-HD.
⑨: Type of the relay displayed is TZS-MD.
⑩: The earth leakage relay TZS-AD for overseas with CE marking is available. Please contact us for details.

Remarks (1): With the medium sensitivity instantaneous tripping / time delay tripping type, you can switch the rated sensitivity current to 100mA, 200mA, 500mA, or 1000mA, and switch the operating time to 5 stages of 0.1 seconds or less, 0.3, 0.5, 1, or 2 seconds with the DIP switch. The rated sensitivity current is set to 100 mA and the operating time is set to 0.1 seconds before delivery.

Ratings of ZCT

Type		TZS-15	TZS-24	TZS-40	TZS-68	TZS-100
Outside view						
Diameter of transit part [mm]		ø15	ø24	ø40	ø68	ø100
Weight [kg]		0.2	0.3	0.7	1.1	2.0
Applicable numbers, size and continuous current of wires (IV cable wires)						
2 wires	max. continuous current A	61	139	298	650	1185
	max. wire size mm²	8	30	100	325	850
	max.diameter of wire mm	6.0	10.5	17	29	45
3 wires	max. continuous current A	61	139	298	650	1185
	max. wire size mm²	8	30	100	325	850
	max.diameter of wire mm	6.0	10.5	17	29	45
4 wires	max. continuous current A	49	115	257	556	992
	max. wire size mm²	5.5	22	80	250	600
	max.diameter of wire mm	5.0	9.5	15.5	26	38

21 List of breakers for marine use and rated breaking capacities (approved by ship classification societies)

Domestic Circuit Breakers

Frame size	Type	Rated current (A)	Poles	Rated voltage (V)	Rated breaking capacities, kA (sym.) Values enclosed in square brackets "[ ]" represent the making current, kA.							
					N K		L R		A B S		B V	
					I_{cu}	I_{cs}	I_{cu}	I_{cs}	I_{cu}	I_{cs}	I_{cu}	I_{cs}
30	**PE30-NF**	3,5,10,15,20,30	2	AC690	—	—	—	—	—	—	—	—
			3	AC450	1.5[2.1]	1.5[2.1]	1.5[2.1]	1.5[2.1]	1.5[2.1]	1.5[2.1]	1.5[2.1]	1.5[2.1]
				AC240	2.5[3.55]	2.5[3.55]	2.5[3.55]	2.5[3.55]	2.5[3.55]	2.5[3.55]	2.5[3.55]	2.5[3.55]
				DC250	—	—	—	—	—	—	—	—
	PS30-NF	3,5,10,15,20,30	2	AC690	—	—	—	—	—	—	—	—
			3	AC450	2.5[3.60]	2.5[3.60]	2.5[3.60]	2.5[3.60]	2.5[3.60]	2.5[3.60]	2.5[3.60]	2.5[3.60]
				AC240	7.5[13.1]	7.5[13.1]	7.5[13.1]	7.5[13.1]	7.5[13.1]	7.5[13.1]	7.5[13.1]	7.5[13.1]
				DC250	2.5[2.5]	2.5[2.5]	2.5[2.5]	2.5[2.5]	2.5[2.5]	2.5[2.5]	2.5[2.5]	2.5[2.5]
50	**PE50-NF**	15,20,30,40,50	2	AC690	—	—	—	—	—	—	—	—
			3	AC450	2.5[3.60]	2.5[3.60]	2.5[3.60]	2.5[3.60]	2.5[3.60]	2.5[3.60]	2.5[3.60]	2.5[3.60]
				AC240	7.5[13.1]	7.5[13.1]	7.5[13.1]	7.5[13.1]	7.5[13.1]	7.5[13.1]	7.5[13.1]	7.5[13.1]
				DC250	2.5[2.5]	2.5[2.5]	2.5[2.5]	2.5[2.5]	2.5[2.5]	2.5[2.5]	2.5[2.5]	2.5[2.5]
	PS50-NF	15,20,30,40,50	2	AC690	—	—	—	—	—	—	—	—
			3	AC450	7.5[13.4]	7.5[13.4]	7.5[13.4]	7.5[13.4]	7.5[13.4]	7.5[13.4]	7.5[13.4]	7.5[13.4]
				AC240	15[31.0]	15[31.0]	15[31.0]	15[31.0]	15[31.0]	15[31.0]	15[31.0]	15[31.0]
				DC250	7.5[7.5]	7.5[7.5]	7.5[7.5]	7.5[7.5]	7.5[7.5]	7.5[7.5]	7.5[7.5]	7.5[7.5]
	S50-SF	15,20,30,40,50	2	AC690	—	—	—	—	—	—	—	—
			3	AC450	25[54.4]	13[29.6]	25[54.4]	13[29.6]	25[54.4]	13[29.6]	25[54.4]	13[29.6]
				AC240	50[117]	25[56.9]	50[117]	25[56.9]	50[117]	25[56.9]	50[117]	25[56.9]
				DC250	25[25]	13[13]	25[25]	13[13]	25[25]	13[13]	25[25]	13[13]
	PS50-PF	15,20,30,40,50	2	AC690	6[11.2]	6[11.2]	6[11.2]	6[11.2]	6[11.2]	6[11.2]	6[11.2]	6[11.2]
			3	AC450	50[112]	35[81.6]	50[112]	35[81.6]	50[112]	35[81.6]	50[112]	35[81.6]
			4	AC240	85[201]	85[201]	85[201]	85[201]	85[201]	85[201]	85[201]	85[201]
				DC250	40[40]	40[40]	40[40]	40[40]	40[40]	40[40]	40[40]	40[40]
60	**PE60-NF**	60	2	AC690	—	—	—	—	—	—	—	—
			3	AC450	2.5[3.60]	2.5[3.60]	2.5[3.60]	2.5[3.60]	2.5[3.60]	2.5[3.60]	2.5[3.60]	2.5[3.60]
				AC240	7.5[13.1]	7.5[13.1]	7.5[13.1]	7.5[13.1]	7.5[13.1]	7.5[13.1]	7.5[13.1]	7.5[13.1]
				DC250	2.5[2.5]	2.5[2.5]	2.5[2.5]	2.5[2.5]	2.5[2.5]	2.5[2.5]	2.5[2.5]	2.5[2.5]
	PS60-NF	60	2	AC690	—	—	—	—	—	—	—	—
			3	AC450	10[21.3]	5[7.74]	10[21.3]	5[7.74]	10[21.3]	5[7.74]	10[21.3]	5[7.74]
				AC240	30[61.9]	15[31.0]	30[61.9]	15[31.0]	30[61.9]	15[31.0]	30[61.9]	15[31.0]
				DC250	7.5[7.5]	4[4]	7.5[7.5]	4[4]	7.5[7.5]	4[4]	7.5[7.5]	4[4]
100	**S100-GF**	15,20,30, 40,50,60, 75,100	2	AC690	6[9.29]	6[9.29]	6[9.29]	6[9.29]	6[9.29]	6[9.29]	6[9.29]	6[9.29]
			3	AC500	—	—	25[52.5]	22[46.2]	25[52.5]	22[46.2]	25[52.5]	22[46.2]
				AC450	50[112]	25[54.4]	50[112]	25[54.4]	50[112]	25[54.4]	50[112]	25[54.4]
				AC415	—	—	65[143]	33[69.3]	65[143]	33[69.3]	65[143]	33[69.3]
				AC240	85[201]	85[201]	85[201]	85[201]	85[201]	85[201]	85[201]	85[201]
				DC250	40[40]	40[40]	40[40]	40[40]	40[40]	40[40]	40[40]	40[40]
	S100-GFL	15,20,30, 40,50,60, 75,100	2	AC690	6[9.29]	6[9.29]	6[9.29]	6[9.29]	6[9.29]	6[9.29]	6[9.29]	6[9.29]
			3	AC500	—	—	25[52.5]	22[46.2]	25[52.5]	22[46.2]	25[52.5]	22[46.2]
				AC450	50[112]	25[54.4]	50[112]	25[54.4]	50[112]	25[54.4]	50[112]	25[54.4]
				AC415	—	—	65[143]	33[69.3]	65[143]	33[69.3]	65[143]	33[69.3]
				AC240	85[201]	85[201]	85[201]	85[201]	85[201]	85[201]	85[201]	85[201]
				DC250	40[40]	40[40]	40[40]	40[40]	40[40]	40[40]	40[40]	40[40]
	S100-GFH	15,20,30, 40,50,60, 75,100	2	AC690	6[9.29]	6[9.29]	6[9.29]	6[9.29]	6[9.29]	6[9.29]	6[9.29]	6[9.29]
			3	AC500	—	—	25[52.5]	22[46.2]	25[52.5]	22[46.2]	25[52.5]	22[46.2]
				AC450	50[112]	25[54.4]	50[112]	25[54.4]	50[112]	25[54.4]	50[112]	25[54.4]
				AC415	—	—	65[143]	33[69.3]	65[143]	33[69.3]	65[143]	33[69.3]
				AC240	85[201]	85[201]	85[201]	85[201]	85[201]	85[201]	85[201]	85[201]
				DC250	40[40]	40[40]	40[40]	40[40]	40[40]	40[40]	40[40]	40[40]
	H100-NF	15,20,30,40,50, 60,75,100	3	AC690	20[43.0]	15[32.6]	20[43.0]	15[32.6]	20[43.0]	15[32.6]	20[43.0]	15[32.6]
				AC500	—	—	45[94.5]①	45[94.5]①	45[94.5]	45[94.5]	45[94.5]①	45[94.5]①
				AC450	120[283]	80[191]	120[283]	80[191]	120[283]	80[191]	120[283]	80[191]
				AC415	—	—	125[275]	85[187]	125[275]	85[187]	125[275]	85[187]
				AC240	150[350]	150[350]	150[350]	150[350]	150[350]	150[350]	150[350]	150[350]
	L100-NF	15,20,30,40,50, 60,75,100	3	AC690	25[53.8]	20[43.0]	25[53.8]	20[43.0]	25[53.8]	20[43.0]	25[53.8]	20[43.0]
				AC500	—	—	65[143]①	65[143]①	65[143]	65[143]	65[143]①	65[143]①
				AC450	180[430]	135[315]	180[430]	135[315]	180[430]	135[315]	180[430]	135[315]
				AC415	200[484]	150[345]	200[484]	150[345]	200[484]	150[345]	200[484]	150[345]
				AC240	200[484]	150[350]	200[484]	150[350]	200[484]	150[350]	200[484]	150[350]
125	**PE125-NF**	60,75,100,125	2	AC690	—	—	—	—	—	—	—	—
			3	AC450	10[21.3]	5[7.74]	10[21.3]	5[7.74]	10[21.3]	5[7.74]	10[21.3]	5[7.74]
				AC240	30[61.9]	15[31.0]	30[61.9]	15[31.0]	30[61.9]	15[31.0]	30[61.9]	15[31.0]
				DC250	7.5[7.5]	4[4]	7.5[7.5]	4[4]	7.5[7.5]	4[4]	7.5[7.5]	4[4]
	S125-SF	15,20,30,40,50, 60,75,100,125	2	AC690	—	—	—	—	—	—	—	—
			3	AC450	25[54.4]	13[29.6]	25[54.4]	13[29.6]	25[54.4]	13[29.6]	25[54.4]	13[29.6]
				AC240	50[117]	25[56.9]	50[117]	25[56.9]	50[117]	25[56.9]	50[117]	25[56.9]
				DC250	25[25]	13[13]	25[25]	13[13]	25[25]	13[13]	25[25]	13[13]

Note ① : at 525V AC.

21 List of breakers for marine use and rated breaking capacities (approved by ship classification societies)

Domestic Circuit Breakers

Frame size	Type	Rated current (A)	Poles	Rated voltage (V)	Rated breaking capacities, kA (sym.) Values enclosed in square brackets "[ ]" represent the making current, kA.					
					C C S		K R		R I N A	
					I_{cu}	I_{cs}	I_{cu}	I_{cs}	I_{cu}	I_{cs}
30	**PE30-NF**	3,5,10,15,20,30	2	AC690	—	—	—	—	—	—
			3	AC450	1.5[2.1]	1.5[2.1]	1.5[2.1]	1.5[2.1]	—	—
				AC240	2.5[3.55]	2.5[3.55]	2.5[3.55]	2.5[3.55]	—	—
				DC250	—	—	—	—	—	—
	PS30-NF	3,5,10,15,20,30	2	AC690	—	—	—	—	—	—
			3	AC450	2.5[3.60]	2.5[3.60]	2.5[3.60]	2.5[3.60]	—	—
				AC240	7.5[13.1]	7.5[13.1]	7.5[13.1]	7.5[13.1]	—	—
				DC250	2.5[2.5]	2.5[2.5]	2.5[2.5]	2.5[2.5]	—	—
50	**PE50-NF**	15,20,30,40,50	2	AC690	—	—	—	—	—	—
			3	AC450	2.5[3.60]	2.5[3.60]	2.5[3.60]	2.5[3.60]	—	—
				AC240	7.5[13.1]	7.5[13.1]	7.5[13.1]	7.5[13.1]	—	—
				DC250	2.5[2.5]	2.5[2.5]	2.5[2.5]	2.5[2.5]	—	—
	PS50-NF	15,20,30,40,50	2	AC690	—	—	—	—	—	—
			3	AC450	7.5[13.4]	7.5[13.4]	7.5[13.4]	7.5[13.4]	—	—
				AC240	15[31.0]	15[31.0]	15[31.0]	15[31.0]	—	—
				DC250	7.5[7.5]	7.5[7.5]	7.5[7.5]	7.5[7.5]	—	—
	S50-SF	15,20,30,40,50	2	AC690	—	—	—	—	—	—
			3	AC450	25[54.4]	13[29.6]	25[54.4]	13[29.6]	—	—
				AC240	50[117]	25[56.9]	50[117]	25[56.9]	—	—
				DC250	25[25]	13[13]	25[25]	13[13]	—	—
	PS50-PF	15,20,30,40,50	2	AC690	6[11.2]	6[11.2]	6[11.2]	6[11.2]	—	—
			3	AC450	50[112]	35[81.6]	50[112]	35[81.6]	—	—
			4	AC240	85[201]	85[201]	85[201]	85[201]	—	—
				DC250	40[40]	40[40]	40[40]	40[40]	—	—
60	**PE60-NF**	60	2	AC690	—	—	—	—	—	—
			3	AC450	2.5[3.60]	2.5[3.60]	2.5[3.60]	2.5[3.60]	—	—
				AC240	7.5[13.1]	7.5[13.1]	7.5[13.1]	7.5[13.1]	—	—
				DC250	2.5[2.5]	2.5[2.5]	2.5[2.5]	2.5[2.5]	—	—
	PS60-NF	60	2	AC690	—	—	—	—	—	—
			3	AC450	10[21.3]	5[7.74]	10[21.3]	5[7.74]	—	—
				AC240	30[61.9]	15[31.0]	30[61.9]	15[31.0]	—	—
				DC250	7.5[7.5]	4[4]	7.5[7.5]	4[4]	—	—
100	**S100-GF**	15,20,30, 40,50,60, 75,100	2	AC690	6[9.29]	6[9.29]	6[9.29]	6[9.29]	6[9]	6[9]
			3	AC500	—	—	25[52.5]	22[46.2]	—	—
				AC450	50[112]	25[54.4]	50[112]	25[54.4]	50[105]	25[52.5]
				AC415	—	—	65[143]	33[69.3]	—	—
				AC240	85[201]	85[201]	85[201]	85[201]	85[187]	85[187]
				DC250	40[40]	40[40]	40[40]	40[40]	40[40]	40[40]
	S100-GFL	15,20,30, 40,50,60, 75,100	2	AC690	—	—	6[9.29]	6[9.29]	—	—
			3	AC500	—	—	25[52.5]	22[46.2]	—	—
				AC450	—	—	50[112]	25[54.4]	—	—
				AC415	—	—	65[143]	33[69.3]	—	—
				AC240	—	—	85[201]	85[201]	—	—
				DC250	—	—	40[40]	40[40]	—	—
	S100-GFH	15,20,30, 40,50,60, 75,100	2	AC690	—	—	6[9.29]	6[9.29]	—	—
			3	AC500	—	—	25[52.5]	22[46.2]	—	—
				AC450	—	—	50[112]	25[54.4]	—	—
				AC415	—	—	65[143]	33[69.3]	—	—
				AC240	—	—	85[201]	85[201]	—	—
				DC250	—	—	40[40]	40[40]	—	—
	H100-NF	15,20,30,40,50, 60,75,100	3	AC690	20[43.0]	15[32.6]	20[43.0]	15[32.6]	20[40]	15[30]
				AC500	—	—	45[94.5]	45[94.5]	—	—
				AC450	120[283]	80[191]	120[283]	80[191]	120[264]	80[176]
				AC415	—	—	125[275]	85[187]	—	—
				AC240	150[350]	150[350]	150[350]	150[350]	150[330]	150[330]
	L100-NF	15,20,30,40,50, 60,75,100	3	AC690	25[53.8]	20[43.0]	25[53.8]	20[43.0]	25[52.5]	19[38]
				AC500	—	—	65[143]	65[143]	—	—
				AC450	180[430]	135[315]	180[430]	135[315]	180[396]	135[297]
				AC415	200[484]	150[345]	200[484]	150[345]	—	—
				AC240	200[484]	150[350]	200[484]	150[350]	200[440]	150[330]
125	**PE125-NF**	60,75,100,125	2	AC690	—	—	—	—	—	—
			3	AC450	10[21.3]	5[7.74]	10[21.3]	5[7.74]	—	—
				AC240	30[61.9]	15[31.0]	30[61.9]	15[31.0]	—	—
				DC250	7.5[7.5]	4[4]	7.5[7.5]	4[4]	—	—
	S125-SF	15,20,30,40,50, 60,75,100,125	2	AC690	—	—	—	—	—	—
			3	AC450	25[54.4]	13[29.6]	25[54.4]	13[29.6]	—	—
				AC240	50[117]	25[56.9]	50[117]	25[56.9]	—	—
				DC250	25[25]	13[13]	25[25]	13[13]	—	—

21 List of breakers for marine use and rated breaking capacities (approved by ship classification societies)

Domestic Circuit Breakers

Frame size	Type	Rated current (A)	Poles	Rated voltage (V)	Rated breaking capacities, kA (sym.) Values enclosed in square brackets "[ ]" represent the making current, kA.							
					N K		L R		A B S		B V	
					I_{cu}	I_{cs}	I_{cu}	I_{cs}	I_{cu}	I_{cs}	I_{cu}	I_{cs}
125	**PS125-NF**	15,20,30,40,50, 60,75,100,125	2	AC690	6[11.2]	6[11.2]	6[11.2]	6[11.2]	6[11.2]	6[11.2]	6[11.2]	6[11.2]
			3	AC450	25[54.4]	25[54.4]	25[54.4]	25[54.4]	25[54.4]	25[54.4]	25[54.4]	25[54.4]
				AC240	50[117]	50[117]	50[117]	50[117]	50[117]	50[117]	50[117]	50[117]
				DC250	25[25]	19[19]	25[25]	19[19]	25[25]	19[19]	25[25]	19[19]
	PS125-NE	40～125 (40,50,60,63 75,100,125)	3	AC690	6[11.2]	6[11.2]	6[11.2]	6[11.2]	6[11.2]	6[11.2]	6[11.2]	6[11.2]
				AC450	25[54.4]	25[54.4]	25[54.4]	25[54.4]	25[54.4]	25[54.4]	25[54.4]	25[54.4]
				AC240	50[117]	50[117]	50[117]	50[117]	50[117]	50[117]	50[117]	50[117]
				DC250	—	—	—	—	—	—	—	—
	PS125-PF	15,20,30,40,50, 60,75,100,125	2	AC690	6[11.2]	6[11.2]	6[11.2]	6[11.2]	6[11.2]	6[11.2]	6[11.2]	6[11.2]
			3	AC450	50[112]	35[81.6]	50[112]	35[81.6]	50[112]	35[81.6]	50[112]	35[81.6]
				AC240	85[201]	85[201]	85[201]	85[201]	85[201]	85[201]	85[201]	85[201]
				DC250	40[40]	40[40]	40[40]	40[40]	40[40]	40[40]	40[40]	40[40]
	PS125-PE	40～125 (40,50,60,63 75,100,125)	3	AC690	6[11.2]	6[11.2]	6[11.2]	6[11.2]	6[11.2]	6[11.2]	6[11.2]	6[11.2]
				AC450	50[112]	35[81.6]	50[112]	35[81.6]	50[112]	35[81.6]	50[112]	35[81.6]
				AC240	85[201]	85[201]	85[201]	85[201]	85[201]	85[201]	85[201]	85[201]
				DC250	—	—	—	—	—	—	—	—
	S125-GF	125	2	AC690	6[9.29]	6[9.29]	6[9.29]	6[9.29]	6[9.29]	6[9.29]	6[9.29]	6[9.29]
			3	AC500	—	—	25[52.5]	22[46.2]	25[52.5]	22[46.2]	25[52.5]	22[46.2]
				AC450	50[112]	25[54.4]	50[112]	25[54.4]	50[112]	25[54.4]	50[112]	25[54.4]
				AC415	—	—	65[143]	33[69.3]	65[143]	33[69.3]	65[143]	33[69.3]
				AC240	85[201]	85[201]	85[201]	85[201]	85[201]	85[201]	85[201]	85[201]
				DC250	40[40]	40[40]	40[40]	40[40]	40[40]	40[40]	40[40]	40[40]
	H125-NF	125	3	AC690	20[43.0]	15[32.6]	20[43.0]	15[32.6]	20[43.0]	15[32.6]	20[43.0]	15[32.6]
				AC500	—	—	45[94.5]①	45[94.5]①	45[94.5]	45[94.5]	45[94.5]①	45[94.5]①
				AC450	120[283]	80[191]	120[283]	80[191]	120[283]	80[191]	120[283]	80[191]
				AC415	—	—	125[275]	85[187]	125[275]	85[187]	125[275]	85[187]
				AC240	150[350]	150[350]	150[350]	150[350]	150[350]	150[350]	150[350]	150[350]
	L125-NF	125	3	AC690	25[53.8]	20[43.0]	25[53.8]	20[43.0]	25[53.8]	20[43.0]	25[53.8]	20[43.0]
				AC500	—	—	65[143]①	65[143]①	65[143]	65[143]	65[143]①	65[143]①
				AC450	180[430]	135[315]	180[430]	135[315]	180[430]	135[315]	180[430]	135[315]
				AC415	200[484]	150[345]	200[484]	150[345]	200[484]	150[345]	200[484]	150[345]
				AC240	200[484]	150[350]	200[484]	150[350]	200[484]	150[350]	200[484]	150[350]
225	**H225-NF**	125,150,175, 200,225	3	AC690	20[43.0]	15[32.6]	20[43.0]	15[32.6]	20[43.0]	15[32.6]	20[43.0]	15[32.6]
				AC500	—	—	45[94.5]①	45[94.5]①	45[94.5]	45[94.5]	45[94.5]①	45[94.5]①
				AC450	120[283]	80[191]	120[283]	80[191]	120[283]	80[191]	120[283]	80[191]
				AC415	—	—	125[275]	85[187]	125[275]	85[187]	125[275]	85[187]
				AC240	150[350]	150[350]	150[350]	150[350]	150[350]	150[350]	150[350]	150[350]
	L225-NF	125,150,175, 200,225	3	AC690	25[53.8]	20[43.0]	25[53.8]	20[43.0]	25[53.8]	20[43.0]	25[53.8]	20[43.0]
				AC500	—	—	65[143]①	65[143]①	65[143]	65[143]	65[143]①	65[143]①
				AC450	180[430]	135[315]	180[430]	135[315]	180[430]	135[315]	180[430]	135[315]
				AC415	200[484]	150[345]	200[484]	150[345]	200[484]	150[345]	200[484]	150[345]
				AC240	200[484]	150[350]	200[484]	150[350]	200[484]	150[350]	200[484]	150[350]
250	**E250-SF**	125,150,175, 200,225	2＊	AC690	—	—	—	—	—	—	—	—
			3	AC450	15[32.6]	12[27.3]	15[32.6]	12[27.3]	15[32.6]	12[27.3]	15[32.6]	12[27.3]
				AC240	35[83.6]	27[62.2]	35[83.6]	27[62.2]	35[83.6]	27[62.2]	35[83.6]	27[62.2]
				DC250	—	—	—	—	—	—	—	—
	S250-SF	125,150,175, 200,225,250	2＊	AC690	—	—	—	—	—	—	—	—
			3	AC450	30[70.8]	15[32.6]	30[70.8]	15[32.6]	30[70.8]	15[32.6]	30[70.8]	15[32.6]
				AC240	85[211]	43[103]	85[211]	43[103]	85[211]	43[103]	85[211]	43[103]
				DC250	25[25]	13[13]	25[25]	13[13]	25[25]	13[13]	25[25]	13[13]
	PS250-NE	125～250 (125,150,175, 200,225,250)	3	AC690	6[11.2]	6[11.2]	6[11.2]	6[11.2]	6[11.2]	6[11.2]	6[11.2]	6[11.2]
				AC450	25[54.4]	25[54.4]	25[54.4]	25[54.4]	25[54.4]	25[54.4]	25[54.4]	25[54.4]
				AC240	50[117]	50[117]	50[117]	50[117]	50[117]	50[117]	50[117]	50[117]
				DC250	—	—	—	—	—	—	—	—
	PS250-PF	125,150,175, 200,225,250	2＊	AC690	6[11.2]	6[11.2]	6[11.2]	6[11.2]	6[11.2]	6[11.2]	6[11.2]	6[11.2]
			3	AC450	50[112]	35[81.6]	50[112]	35[81.6]	50[112]	35[81.6]	50[112]	35[81.6]
				AC240	85[201]	85[201]	85[201]	85[201]	85[201]	85[201]	85[201]	85[201]
				DC250	40[40]	40[40]	40[40]	40[40]	40[40]	40[40]	40[40]	40[40]
	PS250-PE	125～250 (125,150,175, 200,225,250)	3	AC690	6[11.2]	6[11.2]	6[11.2]	6[11.2]	6[11.2]	6[11.2]	6[11.2]	6[11.2]
				AC450	50[112]	35[81.6]	50[112]	35[81.6]	50[112]	35[81.6]	50[112]	35[81.6]
				AC240	85[201]	85[201]	85[201]	85[201]	85[201]	85[201]	85[201]	85[201]
				DC250	—	—	—	—	—	—	—	—

Notes ① : at 525V AC.
＊ : 2 poles breakers use the terminals of both ends of 3 poles breakers.

21 List of breakers for marine use and rated breaking capacities (approved by ship classification societies)

Domestic Circuit Breakers

Frame size	Type	Rated current (A)	Poles	Rated voltage (V)	Rated breaking capacities, kA (sym.) Values enclosed in square brackets "[ ]" represent the making current, kA.					
					C C S		K R		R I N A	
					I_{cu}	I_{cs}	I_{cu}	I_{cs}	I_{cu}	I_{cs}
125	**PS125-NF**	15,20,30,40,50, 60,75,100,125	2	AC690	6[11.2]	6[11.2]	6[11.2]	6[11.2]	—	—
			3	AC450	25[54.4]	25[54.4]	25[54.4]	25[54.4]	—	—
				AC240	50[117]	50[117]	50[117]	50[117]	—	—
				DC250	25[25]	19[19]	25[25]	19[19]	—	—
	PS125-NE	40～125 (40,50,60,63 75,100,125)	3	AC690	6[11.2]	6[11.2]	6[11.2]	6[11.2]	—	—
				AC450	25[54.4]	25[54.4]	25[54.4]	25[54.4]	—	—
				AC240	50[117]	50[117]	50[117]	50[117]	—	—
				DC250	—	—	—	—	—	—
	PS125-PF	15,20,30,40,50, 60,75,100,125	2	AC690	6[11.2]	6[11.2]	6[11.2]	6[11.2]	—	—
			3	AC450	50[112]	35[81.6]	50[112]	35[81.6]	—	—
				AC240	85[201]	85[201]	85[201]	85[201]	—	—
				DC250	40[40]	40[40]	40[40]	40[40]	—	—
	PS125-PE	40～125 (40,50,60,63 75,100,125)	3	AC690	6[11.2]	6[11.2]	6[11.2]	6[11.2]	—	—
				AC450	50[112]	35[81.6]	50[112]	35[81.6]	—	—
				AC240	85[201]	85[201]	85[201]	85[201]	—	—
				DC250	—	—	—	—	—	—
	S125-GF	125	2	AC690	6[9.29]	6[9.29]	6[9.29]	6[9.29]	—	—
			3	AC500	—	—	25[52.5]	22[46.2]	—	—
				AC450	50[112]	25[54.4]	50[112]	25[54.4]	—	—
				AC415	—	—	65[143]	33[69.3]	—	—
				AC240	85[201]	85[201]	85[201]	85[201]	—	—
				DC250	40[40]	40[40]	40[40]	40[40]	—	—
	H125-NF	125	3	AC690	20[43.0]	15[32.6]	20[43.0]	15[32.6]	—	—
				AC500	—	—	45[94.5]	45[94.5]	—	—
				AC450	120[283]	80[191]	120[283]	80[191]	—	—
				AC415	—	—	125[275]	85[187]	—	—
				AC240	150[350]	150[350]	150[350]	150[350]	—	—
	L125-NF	125	3	AC690	25[53.8]	20[43.0]	25[53.8]	20[43.0]	—	—
				AC500	—	—	65[143]	65[143]	—	—
				AC450	180[430]	135[315]	180[430]	135[315]	—	—
				AC415	200[484]	150[345]	200[484]	150[345]	—	—
				AC240	200[484]	150[350]	200[484]	150[350]	—	—
225	**H225-NF**	125,150,175, 200,225	3	AC690	20[43.0]	15[32.6]	20[43.0]	15[32.6]	20[40]	15[30]
				AC500	—	—	45[94.5]	45[94.5]	—	—
				AC450	120[283]	80[191]	120[283]	80[191]	120[264]	80[176]
				AC415	—	—	125[275]	85[187]	—	—
				AC240	150[350]	150[350]	150[350]	150[350]	150[330]	150[330]
	L225-NF	125,150,175, 200,225	3	AC690	25[53.8]	20[43.0]	25[53.8]	20[43.0]	25[52.5]	19[38]
				AC500	—	—	65[143]	65[143]	—	—
				AC450	180[430]	135[315]	180[430]	135[315]	180[396]	135[297]
				AC415	200[484]	150[345]	200[484]	150[345]	—	—
				AC240	200[484]	150[350]	200[484]	150[350]	200[440]	150[330]
250	**E250-SF**	125,150,175, 200,225	2＊	AC690	—	—	—	—	—	—
			3	AC450	15[32.6]	12[27.3]	15[32.6]	12[27.3]	—	—
				AC240	35[83.6]	27[62.2]	35[83.6]	27[62.2]	—	—
				DC250	—	—	—	—	—	—
	S250-SF	125,150,175, 200,225,250	2＊	AC690	—	—	—	—	—	—
			3	AC450	30[70.8]	15[32.6]	30[70.8]	15[32.6]	—	—
				AC240	85[211]	43[103]	85[211]	43[103]	—	—
				DC250	25[25]	13[13]	25[25]	13[13]	—	—
	PS250-NE	125～250 (125,150,175, 200,225,250)	3	AC690	6[11.2]	6[11.2]	6[11.2]	6[11.2]	—	—
				AC450	25[54.4]	25[54.4]	25[54.4]	25[54.4]	—	—
				AC240	50[117]	50[117]	50[117]	50[117]	—	—
				DC250	—	—	—	—	—	—
	PS250-PF	125,150,175, 200,225,250	2＊	AC690	6[11.2]	6[11.2]	6[11.2]	6[11.2]	—	—
			3	AC450	50[112]	35[81.6]	50[112]	35[81.6]	—	—
				AC240	85[201]	85[201]	85[201]	85[201]	—	—
				DC250	40[40]	40[40]	40[40]	40[40]	—	—
	PS250-PE	125～250 (125,150,175, 200,225,250)	3	AC690	6[11.2]	6[11.2]	6[11.2]	6[11.2]	—	—
				AC450	50[112]	35[81.6]	50[112]	35[81.6]	—	—
				AC240	85[201]	85[201]	85[201]	85[201]	—	—
				DC250	—	—	—	—	—	—

21 List of breakers for marine use and rated breaking capacities (approved by ship classification societies)

Domestic Circuit Breakers

Frame size	Type	Rated current (A)	Poles	Rated voltage (V)	Rated breaking capacities, kA (sym.) Values enclosed in square brackets "[ ]" represent the making current, kA.							
					N K		L R		A B S		B V	
					I_{cu}	I_{cs}	I_{cu}	I_{cs}	I_{cu}	I_{cs}	I_{cu}	I_{cs}
400	**PS400-CF**	225,250,300, 350,400	3	AC690	7[13.1]	7[13.1]	7[13.1]	7[13.1]	7[13.1]	7[13.1]	7[13.1]	7[13.1]
				AC450	30[70.8]	30[70.8]	30[70.8]	30[70.8]	30[70.8]	30[70.8]	30[70.8]	30[70.8]
				AC240	50[117]	50[117]	50[117]	50[117]	50[117]	50[117]	50[117]	50[117]
				DC250	25[25]	25[25]	25[25]	25[25]	25[25]	25[25]	25[25]	25[25]
	PS400-NF	225,250,300, 350,400	3	AC690	12[24.3]	12[24.3]	12[24.3]	12[24.3]	12[24.3]	12[24.3]	12[24.3]	12[24.3]
				AC450	45[109]	45[109]	45[109]	45[109]	45[109]	45[109]	45[109]	45[109]
				AC240	85[201]	85[201]	85[201]	85[201]	85[201]	85[201]	85[201]	85[201]
				DC250	50[50]	50[50]	50[50]	50[50]	50[50]	50[50]	50[50]	50[50]
	PS400-NE	125～250 (125,150,175, 200,225,250) 175～400 (175,200,225,250, 300,350,400)	3	AC690	12[24.3]	12[24.3]	12[24.3]	12[24.3]	12[24.3]	12[24.3]	12[24.3]	12[24.3]
				AC450	45[109]	45[109]	45[109]	45[109]	45[109]	45[109]	45[109]	45[109]
				AC240	85[201]	85[201]	85[201]	85[201]	85[201]	85[201]	85[201]	85[201]
				DC250	—	—	—	—	—	—	—	—
	PS400-GF	225,250,300, 350,400	3	AC690	12[24.3]	12[24.3]	12[24.3]	12[24.3]	12[24.3]	12[24.3]	12[24.3]	12[24.3]
				AC450	65[157]	65[157]	65[157]	65[157]	65[157]	65[157]	65[157]	65[157]
				AC240	100[233]	100[233]	100[233]	100[233]	100[233]	100[233]	100[233]	100[233]
				DC250	50[50]	50[50]	50[50]	50[50]	50[50]	50[50]	50[50]	50[50]
	PS400-GE	125～250 (125,150,175, 200,225,250) 175～400 (175,200,225,250, 300,350,400)	3	AC690	12[24.3]	12[24.3]	12[24.3]	12[24.3]	12[24.3]	12[24.3]	12[24.3]	12[24.3]
				AC450	65[157]	65[157]	65[157]	65[157]	65[157]	65[157]	65[157]	65[157]
				AC240	100[233]	100[233]	100[233]	100[233]	100[233]	100[233]	100[233]	100[233]
				DC250	—	—	—	—	—	—	—	—
	PH400-CF	225,250,300, 350,400	3	AC690	12[24.3]	12[24.3]	12[24.3]	12[24.3]	12[24.3]	12[24.3]	12[24.3]	12[24.3]
				AC450	100[230]	100[230]	100[230]	100[230]	100[230]	100[230]	100[230]	100[230]
				AC240	125[306]	125[306]	125[306]	125[306]	125[306]	125[306]	125[306]	125[306]
				DC250	50[50]	50[50]	50[50]	50[50]	50[50]	50[50]	50[50]	50[50]
	PH400-CE	125～250 (125,150,175, 200,225,250) 175～400 (175,200,225,250, 300,350,400)	3	AC690	12[24.3]	12[24.3]	12[24.3]	12[24.3]	12[24.3]	12[24.3]	12[24.3]	12[24.3]
				AC450	100[230]	100[230]	100[230]	100[230]	100[230]	100[230]	100[230]	100[230]
				AC240	125[306]	125[306]	125[306]	125[306]	125[306]	125[306]	125[306]	125[306]
				DC250	—	—	—	—	—	—	—	—
	H400-NE	100～400 (125,150,175, 200,225,250, 300,350,400)	3	AC690	35[77.8]	35[77.8]	35[77.8]	35[77.8]	35[77.8]	35[77.8]	35[77.8]	35[77.8]
				AC525	—	—	45[94.5]	45[94.5]	45[94.5]	45[94.5]	45[94.5]	45[94.5]
				AC450	120[283]	80[191]	120[283]	80[191]	120[283]	80[191]	120[283]	80[191]
				AC415	—	—	125[275]	85[187]	125[275]	85[187]	125[275]	85[187]
				AC240	150[350]	150[350]	150[350]	150[350]	150[350]	150[350]	150[350]	150[350]
	L400-NE	100～400 (125,150,175, 200,225,250, 300,350,400)	3	AC690	50[115]	50[115]	50[115]	50[115]	50[115]	50[115]	50[115]	50[115]
				AC525	—	—	65[143]	65[143]	65[143]	65[143]	65[143]	65[143]
				AC450	180[430]	135[315]	180[430]	135[315]	180[430]	135[315]	180[430]	135[315]
				AC415	200[484]	150[345]	200[484]	150[345]	200[484]	150[345]	200[484]	150[345]
				AC240	200[484]	150[350]	200[484]	150[350]	200[484]	150[350]	200[484]	150[350]

21 List of breakers for marine use and rated breaking capacities (approved by ship classification societies)

Domestic Circuit Breakers

Frame size	Type	Rated current (A)	Poles	Rated voltage (V)	Rated breaking capacities, kA (sym.) Values enclosed in square brackets "[ ]" represent the making current, kA.					
					C C S		K R		R I N A	
					I_{cu}	I_{cs}	I_{cu}	I_{cs}	I_{cu}	I_{cs}
400	**PS400-CF**	225,250,300, 350,400	3	AC690	7[13.1]	7[13.1]	7[13.1]	7[13.1]	—	—
				AC450	100[230]	100[230]	30[70.8]	30[70.8]	—	—
				AC240	125[306]	125[306]	50[117]	50[117]	—	—
				DC250	25[25]	25[25]	25[25]	25[25]	—	—
	PS400-NF	225,250,300, 350,400	3	AC690	12[24.3]	12[24.3]	12[24.3]	12[24.3]	—	—
				AC450	45[109]	45[109]	45[109]	45[109]	—	—
				AC240	85[201]	85[201]	85[201]	85[201]	—	—
				DC250	50[50]	50[50]	50[50]	50[50]	—	—
	PS400-NE	125～250 (125,150,175, 200,225,250) 175～400 (175,200,225,250, 300,350,400)	3	AC690	12[24.3]	12[24.3]	12[24.3]	12[24.3]	—	—
				AC450	45[109]	45[109]	45[109]	45[109]	—	—
				AC240	85[201]	85[201]	85[201]	85[201]	—	—
				DC250	—	—	—	—	—	—
	PS400-GF	225,250,300, 350,400	3	AC690	12[24.3]	12[24.3]	12[24.3]	12[24.3]	—	—
				AC450	65[157]	65[157]	65[157]	65[157]	—	—
				AC240	100[233]	100[233]	100[233]	100[233]	—	—
				DC250	50[50]	50[50]	50[50]	50[50]	—	—
	PS400-GE	125～250 (125,150,175, 200,225,250) 175～400 (175,200,225,250, 300,350,400)	3	AC690	12[24.3]	12[24.3]	12[24.3]	12[24.3]	—	—
				AC450	65[157]	65[157]	65[157]	65[157]	—	—
				AC240	100[233]	100[233]	100[233]	100[233]	—	—
				DC250	—	—	—	—	—	—
	PH400-CF	225,250,300, 350,400	3	AC690	12[24.3]	12[24.3]	12[24.3]	12[24.3]	—	—
				AC450	100[230]	100[230]	100[230]	100[230]	—	—
				AC240	125[306]	125[306]	125[306]	125[306]	—	—
				DC250	50[50]	50[50]	50[50]	50[50]	—	—
	PH400-CE	125～250 (125,150,175, 200,225,250) 175～400 (175,200,225,250, 300,350,400)	3	AC690	12[24.3]	12[24.3]	12[24.3]	12[24.3]	—	—
				AC450	100[230]	100[230]	100[230]	100[230]	—	—
				AC240	125[306]	125[306]	125[306]	125[306]	—	—
				DC250	—	—	—	—	—	—
	H400-NE	100～400 (125,150,175, 200,225,250, 300,350,400)	3	AC690	35[77.8]	35[77.8]	35[77.8]	35[77.8]	—	—
				AC525	—	—	—	—	—	—
				AC450	120[283]	80[191]	120[283]	80[191]	—	—
				AC415	—	—	—	—	—	—
				AC240	150[350]	150[350]	150[350]	150[350]	—	—
	L400-NE	100～400 (125,150,175, 200,225,250, 300,350,400)	3	AC690	50[115]	50[115]	50[115]	50[115]	—	—
				AC525	—	—	—	—	—	—
				AC450	180[430]	135[315]	180[430]	135[315]	—	—
				AC415	200[484]	150[345]	200[484]	150[345]	—	—
				AC240	200[484]	150[350]	200[484]	150[350]	—	—

21 List of breakers for marine use and rated breaking capacities (approved by ship classification societies)

Domestic Circuit Breakers

Frame size	Type	Rated current (A)	Poles	Rated voltage (V)	Rated breaking capacities, kA (sym.) Values enclosed in square brackets "[ ]" represent the making current, kA.							
					N K		L R		A B S		B V	
					I_{cu}	I_{cs}	I_{cu}	I_{cs}	I_{cu}	I_{cs}	I_{cu}	I_{cs}
630	**S630-CF**	500,600,630	3	AC690	10[21.1]	10[21.1]	10[21.1]	10[21.1]	10[21.1]	10[21.1]	10[21.1]	10[21.1]
				AC525	—	—	15[30]	15[30]	15[30]	15[30]	15[30]	15[30]
				AC450	30[70.8]	30[70.8]	30[70.8]	30[70.8]	30[70.8]	30[70.8]	30[70.8]	30[70.8]
				AC415	—	—	36[75.6]	36[75.6]	36[75.6]	36[75.6]	36[75.6]	36[75.6]
				AC240	50[117]	50[117]	50[117]	50[117]	50[117]	50[117]	50[117]	50[117]
				DC250	—	—	—	—	—	—	—	—
	S630-NF	500,600,630	3	AC690	20[43.0]	20[43.0]	20[43.0]	20[43.0]	20[43.0]	20[43.0]	20[43.0]	20[43.0]
				AC525	—	—	30[63]	30[63]	30[63]	30[63]	30[63]	30[63]
				AC450	50[121]	50[121]	50[121]	50[121]	50[121]	50[121]	50[121]	50[121]
				AC415	—	—	50[105]	50[105]	50[105]	50[105]	50[105]	50[105]
				AC240	85[211]	85[211]	85[211]	85[211]	85[211]	85[211]	85[211]	85[211]
				DC250	—	—	—	—	—	—	—	—
	S630-NE	250～630 (250,300,350, 400,500,600,630)	3	AC690	20[43.0]	20[43.0]	20[43.0]	20[43.0]	20[43.0]	20[43.0]	20[43.0]	20[43.0]
				AC525	—	—	30[63]	30[63]	30[63]	30[63]	30[63]	30[63]
				AC450	50[121]	50[121]	50[121]	50[121]	50[121]	50[121]	50[121]	50[121]
				AC415	—	—	50[105]	50[105]	50[105]	50[105]	50[105]	50[105]
				AC240	85[211]	85[211]	85[211]	85[211]	85[211]	85[211]	85[211]	85[211]
	S630-NEH	250～630 (250,300,350, 400,500,600,630)	3	AC690	20[43.0]	20[43.0]	20[43.0]	20[43.0]	20[43.0]	20[43.0]	20[43.0]	20[43.0]
				AC525	—	—	30[63]	30[63]	30[63]	30[63]	30[63]	30[63]
				AC450	50[121]	50[121]	50[121]	50[121]	50[121]	50[121]	50[121]	50[121]
				AC415	—	—	50[105]	50[105]	50[105]	50[105]	50[105]	50[105]
				AC240	85[211]	85[211]	85[211]	85[211]	85[211]	85[211]	85[211]	85[211]
	PS630-CF	500,600 ①	3	AC690	7[13.1]	7[13.1]	7[13.1]	7[13.1]	7[13.1]	7[13.1]	7[13.1]	7[13.1]
				AC450	30[70.8]	30[70.8]	30[70.8]	30[70.8]	30[70.8]	30[70.8]	30[70.8]	30[70.8]
				AC240	50[117]	50[117]	50[117]	50[117]	50[117]	50[117]	50[117]	50[117]
	PS630-NF	500,600 ①	3	AC690	12[24.3]	12[24.3]	12[24.3]	12[24.3]	12[24.3]	12[24.3]	12[24.3]	12[24.3]
				AC450	45[109]	45[109]	45[109]	45[109]	45[109]	45[109]	45[109]	45[109]
				AC240	85[201]	85[201]	85[201]	85[201]	85[201]	85[201]	85[201]	85[201]
	PS630-GF	500,600 ①	3	AC690	12[24.3]	12[24.3]	12[24.3]	12[24.3]	12[24.3]	12[24.3]	12[24.3]	12[24.3]
				AC450	65[157]	65[157]	65[157]	65[157]	65[157]	65[157]	65[157]	65[157]
				AC240	100[233]	100[233]	100[233]	100[233]	100[233]	100[233]	100[233]	100[233]
	PH630-CF	500,600 ①	3	AC690	12[24.3]	12[24.3]	12[24.3]	12[24.3]	12[24.3]	12[24.3]	12[24.3]	12[24.3]
				AC450	100[230]	100[230]	100[230]	100[230]	100[230]	100[230]	100[230]	100[230]
				AC240	125[306]	125[306]	125[306]	125[306]	125[306]	125[306]	125[306]	125[306]
	H630-NE	250～630 (250,300,350, 400,500,600,630)	3	AC690	25[53.8]	20[43.0]	25[53.8]	20[43.0]	25[53.8]	20[43.0]	25[53.8]	20[43.0]
				AC525	—	—	45[94.5]	34[71.4]	45[94.5]	34[71.4]	45[94.5]	34[71.4]
				AC450	125[295]	94[225]	125[295]	94[225]	125[295]	94[225]	125[295]	94[225]
				AC415	—	—	125[275]	94[206.8]	125[275]	94[206.8]	125[275]	94[206.8]
				AC240	150[350]	150[350]	150[350]	150[350]	150[350]	150[350]	150[350]	150[350]
	L630-NE	250～630 (250,300,350, 400,500,600,630)	3	AC690	25[53.8]	20[43.0]	25[53.8]	20[43.0]	25[53.8]	20[43.0]	25[53.8]	20[43.0]
				AC525	—	—	45[94.5]	34[71.4]	45[94.5]	34[71.4]	45[94.5]	34[71.4]
				AC450	180[430]	135[315]	180[430]	135[315]	180[430]	135[315]	180[430]	135[315]
				AC415	—	—	200[440]	150[330]	200[440]	150[330]	200[440]	150[330]
				AC240	200[484]	150[350]	200[484]	150[350]	200[484]	150[350]	200[484]	150[350]

Note ① : Front-conn. type (FC) and Rear-conn. type (RC) are available for 500A and 600A. Plug-in type (PM) is available for only 500A.

21 List of breakers for marine use and rated breaking capacities (approved by ship classification societies)

Domestic Circuit Breakers

Frame size	Type	Rated current (A)	Poles	Rated voltage (V)	Rated breaking capacities, kA (sym.) Values enclosed in square brackets "[ ]" represent the making current, kA.					
					C C S		K R		R I N A	
					I_{cu}	I_{cs}	I_{cu}	I_{cs}	I_{cu}	I_{cs}
630	**S630-CF**	500,600,630	3	AC690	10[21.1]	10[21.1]	10[21.1]	10[21.1]	—	—
				AC525	—	—	15[30]	15[30]	—	—
				AC450	30[70.8]	30[70.8]	30[70.8]	30[70.8]	—	—
				AC415	—	—	36[75.6]	36[75.6]	—	—
				AC240	50[117]	50[117]	50[117]	50[117]	—	—
				DC250	—	—	—	—	—	—
	S630-NF	500,600,630	3	AC690	20[43.0]	20[43.0]	20[43.0]	20[43.0]	—	—
				AC525	—	—	30[63]	30[63]	—	—
				AC450	50[121]	50[121]	50[121]	50[121]	—	—
				AC415	—	—	50[105]	50[105]	—	—
				AC240	85[211]	85[211]	85[211]	85[211]	—	—
				DC250	—	—	—	—	—	—
	S630-NE	250～630 (250,300,350, 400,500,600,630)	3	AC690	20[43.0]	20[43.0]	20[43.0]	20[43.0]	—	—
				AC525	—	—	30[63]	30[63]	—	—
				AC450	50[121]	50[121]	50[121]	50[121]	—	—
				AC415	—	—	50[105]	50[105]	—	—
				AC240	85[211]	85[211]	85[211]	85[211]	—	—
	S630-NEH	250～630 (250,300,350, 400,500,600,630)	3	AC690	20[43.0]	20[43.0]	20[43.0]	20[43.0]	—	—
				AC525	—	—	30[63]	30[63]	—	—
				AC450	50[121]	50[121]	50[121]	50[121]	—	—
				AC415	—	—	50[105]	50[105]	—	—
				AC240	85[211]	85[211]	85[211]	85[211]	—	—
	PS630-CF	500,600 ①	3	AC690	7[13.1]	7[13.1]	7[13.1]	7[13.1]	—	—
				AC450	30[70.8]	30[70.8]	30[70.8]	30[70.8]	—	—
				AC240	50[117]	50[117]	50[117]	50[117]	—	—
	PS630-NF	500,600 ①	3	AC690	12[24.3]	12[24.3]	12[24.3]	12[24.3]	—	—
				AC450	45[109]	45[109]	45[109]	45[109]	—	—
				AC240	85[201]	85[201]	85[201]	85[201]	—	—
	PS630-GF	500,600 ①	3	AC690	12[24.3]	12[24.3]	12[24.3]	12[24.3]	—	—
				AC450	65[157]	65[157]	65[157]	65[157]	—	—
				AC240	100[233]	100[233]	100[233]	100[233]	—	—
	PH630-CF	500,600 ①	3	AC690	12[24.3]	12[24.3]	12[24.3]	12[24.3]	—	—
				AC450	100[230]	100[230]	100[230]	100[230]	—	—
				AC240	125[306]	125[306]	125[306]	125[306]	—	—
	H630-NE	250～630 (250,300,350, 400,500,600,630)	3	AC690	25[53.8]	20[43.0]	25[53.8]	20[43.0]	—	—
				AC525	—	—	45[94.5]	34[71.4]	—	—
				AC450	125[295]	94[225]	125[295]	94[225]	—	—
				AC415	—	—	125[275]	94[206.8]	—	—
				AC240	150[350]	150[350]	150[350]	150[350]	—	—
	L630-NE	250～630 (250,300,350, 400,500,600,630)	3	AC690	25[53.8]	20[43.0]	25[53.8]	20[43.0]	—	—
				AC525	—	—	45[94.5]	34[71.4]	—	—
				AC450	180[430]	135[315]	180[430]	135[315]	—	—
				AC415	—	—	200[440]	150[330]	—	—
				AC240	200[484]	150[350]	200[484]	150[350]	—	—

21 List of breakers for marine use and rated breaking capacities (approved by ship classification societies)

Domestic Circuit Breakers

Frame size	Type	Rated current (A)	Poles	Rated voltage (V)	Rated breaking capacities, kA (sym.) Values enclosed in square brackets "[ ]" represent the making current, kA.							
					N K		L R		A B S		B V	
					I_{cu}	I_{cs}	I_{cu}	I_{cs}	I_{cu}	I_{cs}	I_{cu}	I_{cs}
800	**S800-CF**	700,800	3	AC690	10[21.1]	10[21.1]	10[21.1]	10[21.1]	10[21.1]	10[21.1]	10[21.1]	10[21.1]
				AC525	—	—	15[30]	15[30]	15[30]	15[30]	15[30]	15[30]
				AC450	30[70.8]	30[70.8]	30[70.8]	30[70.8]	30[70.8]	30[70.8]	30[70.8]	30[70.8]
				AC415	—	—	36[75.6]	36[75.6]	36[75.6]	36[75.6]	36[75.6]	36[75.6]
				AC240	50[117]	50[117]	50[117]	50[117]	50[117]	50[117]	50[117]	50[117]
				DC250	—	—	—	—	—	—	—	—
	S800-NF	700,800	3	AC690	20[43.0]	20[43.0]	20[43.0]	20[43.0]	20[43.0]	20[43.0]	20[43.0]	20[43.0]
				AC525	—	—	30[63]	30[63]	30[63]	30[63]	30[63]	30[63]
				AC450	50[121]	50[121]	50[121]	50[121]	50[121]	50[121]	50[121]	50[121]
				AC415	—	—	50[105]	50[105]	50[105]	50[105]	50[105]	50[105]
				AC240	85[211]	85[211]	85[211]	85[211]	85[211]	85[211]	85[211]	85[211]
				DC250	—	—	—	—	—	—	—	—
	S800-NE	350～800 (350,400,450,500, 600,700,800)	3	AC690	20[43.0]	20[43.0]	20[43.0]	20[43.0]	20[43.0]	20[43.0]	20[43.0]	20[43.0]
				AC525	—	—	30[63]	30[63]	30[63]	30[63]	30[63]	30[63]
				AC450	50[121]	50[121]	50[121]	50[121]	50[121]	50[121]	50[121]	50[121]
				AC415	—	—	50[105]	50[105]	50[105]	50[105]	50[105]	50[105]
				AC240	85[211]	85[211]	85[211]	85[211]	85[211]	85[211]	85[211]	85[211]
	S800-NEH	350～800 (350,400,450,500, 600,700,800)	3	AC690	20[43.0]	20[43.0]	20[43.0]	20[43.0]	20[43.0]	20[43.0]	20[43.0]	20[43.0]
				AC525	—	—	30[63]	30[63]	30[63]	30[63]	30[63]	30[63]
				AC450	50[121]	50[121]	50[121]	50[121]	50[121]	50[121]	50[121]	50[121]
				AC415	—	—	50[105]	50[105]	50[105]	50[105]	50[105]	50[105]
				AC240	85[211]	85[211]	85[211]	85[211]	85[211]	85[211]	85[211]	85[211]
	S800-PF	700,800	3	AC690	25[53.8]	20[43.0]	25[53.8]	20[43.0]	25[53.8]	20[43.0]	25[53.8]	20[43.0]
				AC450	85[203]	50[121]	85[203]	50[121]	85[203]	50[121]	85[203]	50[121]
				AC240	125[306]	125[306]	125[306]	125[306]	125[306]	125[306]	125[306]	125[306]
				DC250	—	—	—	—	—	—	—	—
	S800-PE	350～800 (350,400,450,500, 600,700,800)	3	AC690	25[53.8]	20[43.0]	25[53.8]	20[43.0]	25[53.8]	20[43.0]	25[53.8]	20[43.0]
				AC450	85[203]	50[121]	85[203]	50[121]	85[203]	50[121]	85[203]	50[121]
				AC240	125[306]	125[306]	125[306]	125[306]	125[306]	125[306]	125[306]	125[306]
				DC250	—	—	—	—	—	—	—	—
	H800-NE	350～800 (350,400,450,500, 600,700,800)	3	AC690	25[53.8]	20[43.0]	25[53.8]	20[43.0]	25[53.8]	20[43.0]	25[53.8]	20[43.0]
				AC525	—	—	45[94.5]	34[71.4]	45[94.5]	34[71.4]	45[94.5]	34[71.4]
				AC450	125[295]	94[225]	125[295]	94[225]	125[295]	94[225]	125[295]	94[225]
				AC415	—	—	125[275]	94[206.8]	125[275]	94[206.8]	125[275]	94[206.8]
				AC240	150[350]	150[350]	150[350]	150[350]	150[350]	150[350]	150[350]	150[350]
	L800-NE	350～800 (350,400,450,500, 600,700,800)	3	AC690	25[53.8]	20[43.0]	25[53.8]	20[43.0]	25[53.8]	20[43.0]	25[53.8]	20[43.0]
				AC525	—	—	45[94.5]	34[71.4]	45[94.5]	34[71.4]	45[94.5]	34[71.4]
				AC450	180[430]	135[315]	180[430]	135[315]	180[430]	135[315]	180[430]	135[315]
				AC415	—	—	200[440]	150[330]	200[440]	150[330]	200[440]	150[330]
				AC240	200[484]	150[350]	200[484]	150[350]	200[484]	150[350]	200[484]	150[350]
1250	**S1250-NE**	500～1250 (500,600,700,800, 1000,1200,1250)	3	AC690	25[53.8]	20[43.0]	25[53.8]	20[43.0]	25[53.8]	20[43.0]	25[53.8]	20[43.0]
				AC450	65[157]	50[121]	65[157]	50[121]	65[157]	50[121]	65[157]	50[121]
				AC240	100[233]	75[181]	100[233]	75[181]	100[233]	75[181]	100[233]	75[181]
	S1250-NEH	500～1250 (500,600,700,800, 1000,1200,1250)	3	AC690	25[53.8]	20[43.0]	25[53.8]	20[43.0]	25[53.8]	20[43.0]	25[53.8]	20[43.0]
				AC450	65[157]	50[121]	65[157]	50[121]	65[157]	50[121]	65[157]	50[121]
				AC240	100[233]	75[181]	100[233]	75[181]	100[233]	75[181]	100[233]	75[181]
	S1250-GE	500～1250 (500,600,700,800, 1000,1200,1250)	3	AC690	45[100]	34[75.6]	45[100]	34[75.6]	45[100]	34[75.6]	45[100]	34[75.6]
				AC450	85[203]	65[157]	85[203]	65[157]	85[203]	65[157]	85[203]	65[157]
				AC240	125[306]	94[227]	125[306]	94[227]	125[306]	94[227]	125[306]	94[227]

21 List of breakers for marine use and rated breaking capacities (approved by ship classification societies)

Domestic Circuit Breakers

Frame size	Type	Rated current (A)	Poles	Rated voltage (V)	Rated breaking capacities, kA (sym.) Values enclosed in square brackets "[ ]" represent the making current, kA.					
					C C S		K R		R I N A	
					I_{cu}	I_{cs}	I_{cu}	I_{cs}	I_{cu}	I_{cs}
800	**S800-CF**	700,800	3	AC690	10[21.1]	10[21.1]	10[21.1]	10[21.1]	—	—
				AC525	—	—	15[30]	15[30]	—	—
				AC450	30[70.8]	30[70.8]	30[70.8]	30[70.8]	—	—
				AC415	—	—	36[75.6]	36[75.6]	—	—
				AC240	50[117]	50[117]	50[117]	50[117]	—	—
				DC250	—	—	—	—	—	—
	S800-NF	700,800	3	AC690	20[43.0]	20[43.0]	20[43.0]	20[43.0]	—	—
				AC525	—	—	30[63]	30[63]	—	—
				AC450	50[121]	50[121]	50[121]	50[121]	—	—
				AC415	—	—	50[105]	50[105]	—	—
				AC240	85[211]	85[211]	85[211]	85[211]	—	—
				DC250	—	—	—	—	—	—
	S800-NE	350～800 (350,400,450,500, 600,700,800)	3	AC690	20[43.0]	20[43.0]	20[43.0]	20[43.0]	—	—
				AC525	—	—	30[63]	30[63]	—	—
				AC450	50[121]	50[121]	50[121]	50[121]	—	—
				AC415	—	—	50[105]	50[105]	—	—
				AC240	85[211]	85[211]	85[211]	85[211]	—	—
	S800-NEH	350～800 (350,400,450,500, 600,700,800)	3	AC690	20[43.0]	20[43.0]	20[43.0]	20[43.0]	—	—
				AC525	—	—	30[63]	30[63]	—	—
				AC450	50[121]	50[121]	50[121]	50[121]	—	—
				AC415	—	—	50[105]	50[105]	—	—
				AC240	85[211]	85[211]	85[211]	85[211]	—	—
	S800-PF	700,800	3	AC690	—	—	—	—	—	—
				AC450	—	—	—	—	—	—
				AC240	—	—	—	—	—	—
				DC250	—	—	—	—	—	—
	S800-PE	350～800 (350,400,450,500, 600,700,800)	3	AC690	—	—	—	—	—	—
				AC450	—	—	—	—	—	—
				AC240	—	—	—	—	—	—
				DC250	—	—	—	—	—	—
	H800-NE	350～800 (350,400,450,500, 600,700,800)	3	AC690	25[53.8]	20[43.0]	25[53.8]	20[43.0]	—	—
				AC525	—	—	45[94.5]	34[71.4]	—	—
				AC450	125[295]	94[225]	125[295]	94[225]	—	—
				AC415	—	—	125[275]	94[206.8]	—	—
				AC240	150[350]	150[350]	150[350]	150[350]	—	—
	L800-NE	350～800 (350,400,450,500, 600,700,800)	3	AC690	25[53.8]	20[43.0]	25[53.8]	20[43.0]	—	—
				AC525	—	—	45[94.5]	34[71.4]	—	—
				AC450	180[430]	135[315]	180[430]	135[315]	—	—
				AC415	—	—	200[440]	150[330]	—	—
				AC240	200[484]	150[350]	200[484]	150[350]	—	—
1250	**S1250-NE**	500～1250 (500,600,700,800, 1000,1200,1250)	3	AC690	25[53.8]	20[43.0]	—	—	—	—
				AC450	65[157]	50[121]	—	—	—	—
				AC240	100[233]	75[181]	—	—	—	—
	S1250-NEH	500～1250 (500,600,700,800, 1000,1200,1250)	3	AC690	25[53.8]	20[43.0]	—	—	—	—
				AC450	65[157]	50[121]	—	—	—	—
				AC240	100[233]	75[181]	—	—	—	—
	S1250-GE	500～1250 (500,600,700,800, 1000,1200,1250)	3	AC690	45[100]	34[75.6]	—	—	—	—
				AC450	85[203]	65[157]	—	—	—	—
				AC240	125[306]	94[227]	—	—	—	—

21 List of breakers for marine use and rated breaking capacities (approved by ship classification societies)

TemBreak

Frame size	Type	Rated current (A)	Poles	Rated voltage (V)	Rated breaking capacities, kA (sym.) Values enclosed in square brackets "[ ]" represent the making current, kA.							
					N K		L R		A B S		B V	
					O-CO	O-CO-CO	O-CO	O-CO-CO	O-CO	O-CO-CO	O-CO	O-CO-CO
50	**TB-5S**	10	2	AC250	2.5[4.1]	—	2.5[4.1]	—	—	—	—	—
				AC125	42[99.3]	—	43.5[101.6]	—	—	—	—	—
				DC125	5.0[5.0]	—	5.0[5.0]	—	—	—	—	—
		15,20,30, 40,50	2	AC250	5.0[8.0]	—	5.0[8.0]	—	—	—	—	—
				AC125	42[99.3]	—	43.5[101.6]	—	—	—	—	—
				DC125	5.0[5.0]	—	5.0[5.0]	—	—	—	—	—
	TB-5P	10	2	AC250	2.5[4.1]	—	2.5[4.1]	—	2.5[4.1]	—	2.5[3.57]③	—
				AC125	42[99.3]	—	43.5[101.6]	—	42[99.3]	—	42[102]②	—
				DC125	5.0[5.0]	—	5.0[5.0]	—	5.0[5.0]	—	—	—
		15,20,30, 40,50	2	AC250	5.0[8.0]	—	5.0[8.0]	—	5.0[8.0]	—	5[7.98]③	—
				AC125	42[99.3]	—	43.5[101.6]	—	42[99.3]	—	42[102]②	—
				DC125	5.0[5.0]	—	5.0[5.0]	—	5.0[5.0]	—	—	—
	TB-5D	10	2	AC250	2.5[4.1]	—	2.5[4.1]	—	2.5[4.1]	—	2.5[3.57]③	—
				AC125	42[99.3]	—	43.5[101.6]	—	42[99.3]	—	42[102]②	—
				DC125	5.0[5.0]	—	5.0[5.0]	—	5.0[5.0]	—	—	—
		15,20,30, 40,50	2	AC250	5.0[8.0]	—	5.0[8.0]	—	5.0[8.0]	—	5[7.98]③	—
				AC125	42[99.3]	—	43.5[101.6]	—	42[99.3]	—	42[102]②	—
				DC125	5.0[5.0]	—	5.0[5.0]	—	5.0[5.0]	—	—	—
1000	**TL-1000NE**	500～1000 (500,600, 700,800, 900,1000)	3	AC690	—	—	45[93.8]	34[71.6]	—	—	45[93.8]	34[71.6]
				AC500	—	—	75[163]	57[124]	—	—	—	—
				AC460	125[295]	—	125[295]①	65[153]①	125[295]	—	125[295]①	65[153]①
				AC240	—	—	150[345]	113[263]	—	—	—	—
1200	**TL-1200NE**	600～1200 (600,700, 800,1000, 1200)	3	AC690	—	—	45[93.8]	34[71.6]	—	—	45[93.8]	34[71.6]
				AC500	—	—	75[163]	57[124]	—	—	—	—
				AC460	125[295]	—	125[295]①	65[153]①	125[295]	—	125[295]①	65[153]①
				AC240	—	—	150[345]	113[263]	—	—	—	—
2000	**XS2000NE**	1000～2000 (1000,1200,1400, 1600,1800,2000)	3	AC500	—	—	87.1[194.9]	—	85[195]	—	—	—

Notes ① : at 450V AC. ② : at 100V AC. ③ : at 225V AC.

21 List of breakers for marine use and rated breaking capacities (approved by ship classification societies)

TemBreak

Frame size	Type	Rated current (A)	Poles	Rated voltage (V)	Rated breaking capacities, kA (sym.) Values enclosed in square brackets "[ ]" represent the making current, kA.					
					C C S		K R		R I N A	
					O-CO	O-CO-CO	O-CO	O-CO-CO	O-CO	O-CO-CO
50	**TB-5S**	10	2	AC250	—	—	2.5[4.1]	—	—	—
				AC125	—	—	42[99.3]	—	—	—
				DC125	—	—	5.0[5.0]	—	—	—
		15,20,30, 40,50	2	AC250	—	—	5.0[8.0]	—	—	—
				AC125	—	—	42[99.3]	—	—	—
				DC125	—	—	5.0[5.0]	—	—	—
	TB-5P	10	2	AC250	2.5[4.1]	—	2.5[4.1]	—	—	—
				AC125	42[99.3]	—	42[99.3]	—	—	—
				DC125	5.0[5.0]	—	5.0[5.0]	—	—	—
		15,20,30, 40,50	2	AC250	5.0[8.0]	—	5.0[8.0]	—	—	—
				AC125	42[99.3]	—	42[99.3]	—	—	—
				DC125	5.0[5.0]	—	5.0[5.0]	—	—	—
	TB-5D	10	2	AC250	—	—	2.5[4.1]	—	—	—
				AC125	—	—	42[99.3]	—	—	—
				DC125	—	—	5.0[5.0]	—	—	—
		15,20,30, 40,50	2	AC250	—	—	5.0[8.0]	—	—	—
				AC125	—	—	42[99.3]	—	—	—
				DC125	—	—	5.0[5.0]	—	—	—
1000	**TL-1000NE**	500～1000 (500,600, 700,800, 900,1000)	3	AC690	—	—	—	—	45[94.5]	34[71.4]
				AC500	—	—	—	—	—	—
				AC460	—	—	—	—	125[275]①	63[138.6]①
				AC240	—	—	—	—	—	—
1200	**TL-1200NE**	600～1200 (600,700, 800,1000, 1200)	3	AC690	—	—	—	—	45[94.5]	34[71.4]
				AC500	—	—	—	—	—	—
				AC460	—	—	—	—	125[275]①	63[138.6]①
				AC240	—	—	—	—	—	—
2000	**XS2000NE**	1000～2000 (1000,1200,1400, 1600,1800,2000)	3	AC500	—	—	85[195]	—	—	—

22 List of breakers for CCC approved and rated breaking capacities

Domestic Circuit Breakers

Type	Rated current (A)	Poles	Rated voltage (V)	Rated breaking capacities (kA) (sym.) I_{cu}	Rated breaking capacities (kA) (sym.) I_{cs}	Rated short time withstand current (kA) I_{cw}
E250-SF	125～250	3,4	AC 415	25	19	—
S50-SF	15～50	2,3	AC 415	30	15	—
			AC 240	30	15	—
S125-SF	15～125	2,3,4	AC 415	30	15	—
			AC 240	30	15	—
PS125-NF	15～125	2,3,4	AC 690	6	6	—
			AC 415	36	36	—
			AC 240	50	50	—
PS125-NE	40～125	3,4	AC 690	6	6	1.6 (0.4s)
			AC 415	36	36	1.6 (0.4s)
			AC 240	50	50	1.6 (0.4s)
PS125-PF	15～125	2,3,4	AC 690	6	6	—
			AC 415	70	50	—
			AC 240	85	85	—
PS125-PE	40～125	3,4	AC 690	6	6	1.6 (0.4s)
			AC 415	70	50	1.6 (0.4s)
			AC 240	85	85	1.6 (0.4s)
PS250-NE	125～250	3,4	AC 690	6	6	2.5 (0.4s)
			AC 415	36	36	2.5 (0.4s)
			AC 240	50	50	2.5 (0.4s)
S250-SF	125～250	3,4	AC 415	40	20	—
PS250-PF	125～250	3,4	AC 690	6	6	—
			AC 415	70	50	—
			AC 240	85	85	—
PS250-PE	125～250	3,4	AC 690	6	6	2.5 (0.4s)
			AC 415	70	50	2.5 (0.4s)
			AC 240	85	85	2.5 (0.4s)
PS400-CF	225～400	3,4	AC 690	7	7	—
			AC 415	36	36	—
			AC 240	50	50	—
PS400-NF	225～400	3,4	AC 690	12	12	—
			AC 415	50	50	—
			AC 240	85	85	—
PS400-NE	125～400	3,4	AC 690	12	12	5 (0.4s)
			AC 415	50	50	5 (0.4s)
			AC 240	85	85	5 (0.4s)
PS400-GF	225～400	3,4	AC 690	12	12	—
			AC 415	70	70	—
			AC 240	100	100	—
PS400-GE	125～400	3,4	AC 690	12	12	5 (0.4s)
			AC 415	70	70	5 (0.4s)
			AC 240	100	100	5 (0.4s)
S630-CF	500～630	3,4	AC 415	36	36	—
			AC 240	50	50	—
PS630-CF	500～600	3,4	AC 690	7	7	—
			AC 415	36	36	—
			AC 240	50	50	—
S630-NF	500～630	3,4	AC 415	50	50	—
			AC 240	85	85	—
S630-NE	250～630	3,4	AC 415	50	50	10 (0.3s)
			AC 240	85	85	10 (0.3s)
S630-NEH	250～630	3,4	AC 415	50	50	10 (0.3s)
			AC 240	85	85	10 (0.3s)
PS630-NF	500～600	3,4	AC 690	12	12	—
			AC 415	50	50	—
			AC 240	85	85	—
PS630-NE	250～630	3,4	AC 690	12	12	—
			AC 415	50	50	—
			AC 240	85	85	—
PS630-GF	500～600	3,4	AC 690	12	12	—
			AC 415	70	70	—
			AC 240	100	100	—
PS630-GE	250～630	3,4	AC 690	12	12	—
			AC 415	70	70	—
			AC 240	100	100	—
S800-CF	700, 800	3,4	AC 415	36	36	—
			AC 240	50	50	—
S800-NF	700, 800	3,4	AC 415	50	50	—
			AC 240	85	85	—
S800-NE	350～800	3,4	AC 415	50	50	10 (0.3s)
			AC 240	85	85	10 (0.3s)
S800-NEH	350～800	3,4	AC 415	50	50	10 (0.3s)
			AC 240	85	85	10 (0.3s)
S800-RF	700, 800	3,4	AC 415	70	50	—
			AC 240	100	75	—
S800-RE	350～800	3,4	AC 415	70	50	10 (0.3s)
			AC 240	100	75	10 (0.3s)
S800-REH	350～800	3,4	AC 415	70	50	10 (0.3s)
			AC 240	100	75	10 (0.3s)

Type	Rated current (A)	Poles	Rated voltage (V)	Rated breaking capacities (kA) (sym.) I_{cu}	Rated breaking capacities (kA) (sym.) I_{cs}	Rated short time withstand current (kA) I_{cw}
S1000-CE	400～1000	3,4	AC 415	65	50	—
			AC 240	100	75	—
S1250-NE	500～1250	3,4	AC 415	70	50	15 (0.3s)
			AC 240	100	75	15 (0.3s)
S1250-NEH	500～1250	3,4	AC 415	70	50	15 (0.3s)
			AC 240	100	75	15 (0.3s)
S1250-GE	500～1250	3,4	AC 415	85	65	15 (0.3s)
			AC 240	125	94	15 (0.3s)
S1600-NE	700～1600	3,4	AC 415	85	65	20 (0.3s)
			AC 240	125	94	20 (0.3s)
S1600-NEH	700～1600	3,4	AC 415	85	65	20 (0.3s)
			AC 240	125	94	20 (0.3s)
H100-NF	15～100	3,4	AC 415	125	85	—
			AC 240	150	150	—
H125-NF	125	3,4	AC 415	125	85	—
			AC 240	150	150	—
H225-NF	125～225	3,4	AC 415	125	85	—
			AC 240	150	150	—
H225-NE	125～225	3,4	AC 415	85	85	—
			AC 240	150	150	—
H250-NF	250	3,4	AC 415	125	85	—
			AC 240	150	150	—
PH400-CF	225～400	3,4	AC 690	12	12	—
			AC 415	110	110	—
			AC 240	125	125	—
PH400-CE	125～400	3,4	AC 690	12	12	5 (0.4s)
			AC 415	110	110	5 (0.4s)
			AC 240	125	125	5 (0.4s)
H400-NE	125～400	3,4	AC 415	125	85	5 (0.3s)
			AC 240	150	150	5 (0.3s)
PH630-CF	500～600	3,4	AC 690	12	12	—
			AC 415	110	110	—
			AC 240	125	125	—
PH630-CE	250～630	3,4	AC 690	12	12	—
			AC 415	110	110	—
			AC 240	125	125	—
H630-NE	250～630	3	AC 415	125	94	10 (0.3s)
			AC 240	150	150	10 (0.3s)
H800-NE	350～800	3	AC 415	125	94	10 (0.3s)
			AC 240	150	150	10 (0.3s)
L100-NF	15～100	3,4	AC 415	200	150	—
			AC 240	200	150	—
L125-NF	125	3,4	AC 415	200	150	—
			AC 240	200	150	—
L225-NF	125～225	3,4	AC 415	200	150	—
			AC 240	200	150	—
L250-NF	250	3,4	AC 415	200	150	—
			AC 240	200	150	—
L400-NE	125～400	3,4	AC 415	200	150	5 (0.3s)
			AC 240	200	150	5 (0.3s)
L630-NE	250～630	3	AC 415	200	150	10 (0.3s)
			AC 240	200	150	10 (0.3s)
L800-NE	350～800	3	AC 415	200	150	10 (0.3s)
			AC 240	200	150	10 (0.3s)
TB-5D	10	2	AC 240	2.5	—	—
	15～50		AC 240	5	—	—
TB-5P	10	2	AC 240	2.5	—	—
	15～50		AC 240	5	—	—
TL-1000NE	500～1000	3,4	AC 440	125	65	—
			AC 240	150	113	—
TL-1200NE	600～1200	3,4	AC 440	125	65	—
			AC 240	150	113	—

Note: Specify CCC certified product when ordering.

22 List of breakers for CCC approved and rated breaking capacities

Overseas Circuit Breakers

Type	Rated current (A)	Poles	Rated voltage (V)	Rated breaking capacities (kA) (sym.)		Rated short time withstand current (kA)
				I_{cu}	I_{cs}	I_{cw}
E250-SJ	100～250	3,4	AC 415	25	19	—
S160-SCJ	25～160	3,4	AC 415	25	13	—
S160-SJ	25～160	3,4	AC 415	40	20	—
S800-NJ	630～800	3,4	AC 415	50	50	—
			AC 240	85	85	—

Note: Specify CCC certified product when ordering.

3 Selection

1 Characteristics and Performance ····· 3-2
2 Current-carrying capacity depending on ambient temperature and cable size ··· 3-3
3 Application of circuit breakers and earth leakage circuit breakers based on transformer capacity ····· 3-4
4 Application of circuit breakers based on breaking capacity ····· 3-6
5 Application of earth leakage circuit breakers based on breaking capacity ····· 3-7
6 Selection of earth leakage circuit breakers for the purpose of protection ····· 3-8
7 Selection of circuit breakers and earth leakage circuit breakers for motor circuit main lines ··· 3-9
8 Selection of breakers for protection of motor branch circuits ····· 3-10
9 Selection of earth leakage circuit breakers for motor branch circuits ····· 3-14
10 Selection of circuit breakers for lamps and electric heating circuits ····· 3-16
11 Selection of earth leakage circuit breakers for lamps and electric heating circuits ··· 3-17
12 Selection of motor protection breakers (for direct start) ····· 3-18
13 Selection of earth leakage circuit breakers for motor protection (for direct start) ··· 3-19
14 Selection of circuit breakers for transformer primary side ····· 3-20
15 Selection of circuit breakers for resistance welding machine circuits ····· 3-21
16 Selection of circuit breakers for capacitor circuits ····· 3-21
17 Selection of circuit breakers for inverter circuits ····· 3-21
18 Selection of circuit breakers and earth leakage circuit breakers for selectivity coordination ····· 3-22
19 Combination of breakers for cascade breaking ····· 3-24
20 Selection of rated operational voltage and number of poles ····· 3-29
21 Selection of single phase 3-wire circuit breakers with neutral phase open protection ··· 3-30
22 Application of single phase 3-wire circuit breakers/earth leakage circuit breakers with neutral phase open protection to parallel circuits ····· 3-31
23 Selection of single phase 3-wire earth leakage circuit breakers with neutral phase open protection for photovoltaic power generation systems ··· 3-32

Overcurrent and Operating Time

The operating characteristic curves show a graph of overcurrent and the corresponding operating time. The device operates within the range of the maximum and minimum curves.
Also, the operating characteristics are based on the operating time at 125% and 200% of the rated current specified in Appendix 2, JIS C 8201-2-1.

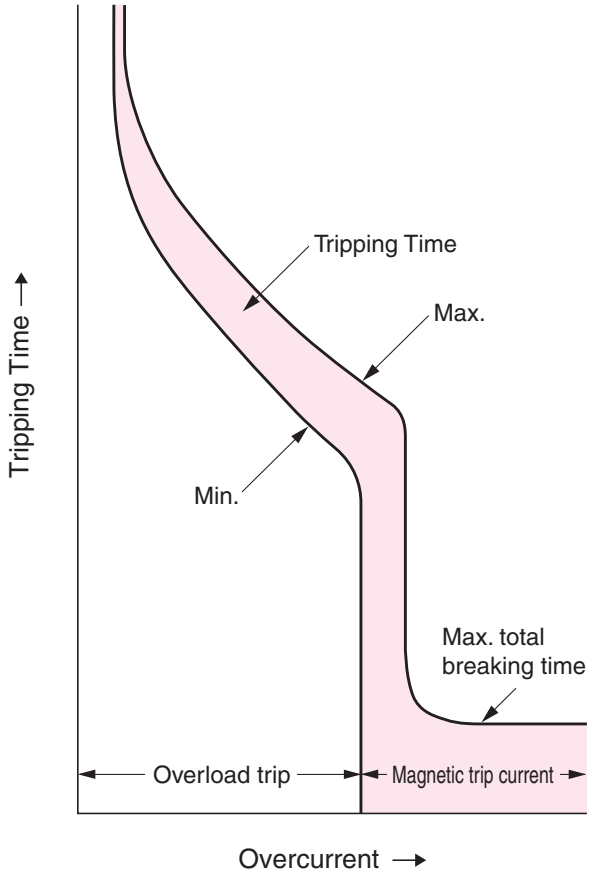

Thermal-Magnetic Type Operating Characteristic Curve

Trip Operating Characteristics

Rated current I_n (A)	Tripping Time (min)	
	Rated current ×125%	Rated current × 200%
$I_n \leq 30$	60 or less	2 or less
$30 < I_n \leq 50$	60 or less	4 or less
$50 < I_n \leq 100$	120 or less	6 or less
$100 < I_n \leq 225$	120 or less	8 or less
$225 < I_n \leq 400$	120 or less	10 or less
$400 < I_n \leq 600$	120 or less	12 or less
$600 < I_n \leq 800$	120 or less	14 or less
$800 < I_n \leq 1000$	120 or less	16 or less
$1000 < I_n \leq 1200$	120 or less	18 or less
$1200 < I_n \leq 1600$	120 or less	20 or less
$1600 < I_n \leq 2000$	120 or less	22 or less
$2000 < I_n$	120 or less	24 or less

Short circuit breaking performance

Short circuit breaking performance refers to the ability to break a short-circuit current that flows when a short-circuit accident occurs. It is indicated by two types of rated breaking capacity (kA), I_{cu} and I_{cs}.

I_{cu} : It indicates the ability to break directly under the breaker, and is called the rated ultimate short-circuit breaking capacity. In terms of breaking operation duty, it must have twice the breaking performance of O-t-CO.

I_{cs} : It indicates the ability to break at the wiring end of the circuit breaker load, and is called the rated service short-circuit breaking capacity. In terms of breaking operation duty, it must have three times the breaking performance of O-t-CO-t-CO.

2 Current-carrying capacity depending on ambient temperature and cable size

Correction of conduction current depending on ambient temperature

For rated current of thermal-magnetic type and hydraulic-magnetic circuit breakers, electrical adjustment is performed at a calibrated temperature of 40˚C as specified by JIS standards. And, when the ambient temperature of the circuit breaker installation location is other than 40˚C, the operating characteristics will change. Therefore, it is necessary to correct the load current based on the ambient compensating curve.

Thermal-Magnetic Type Circuit Breakers : If the ambient temperature becomes higher than the calibrated temperature, the trip current decreases, and the circuit breaker will trip even when the rated current flows. Therefore, it is necessary to reduce the load current in accordance with the ambient compensating curve so that the circuit breaker does not trip. If the ambient temperature becomes lower than the calibrated temperature, the circuit breaker can be used up to the load current corrected by the ambient compensating curve, but select a circuit breaker with a margin of error in consideration of fluctuations in the power supply voltage and load current.

Thermal-magnetic type temperature correction curve

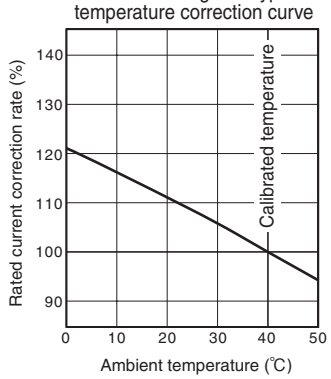

Hydraulic-Magnetic Type Circuit Breakers : The trip current does not vary depending on the ambient temperature, but the tripping time will change.

Electronic Circuit Breakers : The trip current and tripping time do not vary depending on the ambient temperature. However, if the ambient temperature rises above the calibrated temperature, it may affect the service life of the electronic components.

Hydraulic-magnetic type temperature correction curve

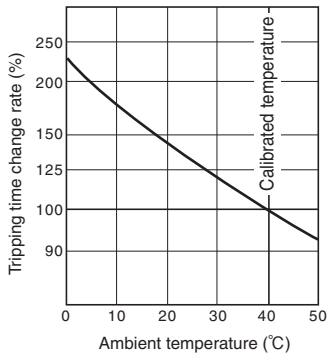

Precautions when using heat-resistant wires with thermal-magnetic circuit breakers

Appendix 2 of the JIS standard defines the test copper conductor according to the rated current for the circuit breaker trip test and temperature rise test as shown in the table below. If a conductor that is thinner than this test copper conductor is used, the terminal temperature of the circuit breaker may rise or the circuit breaker may operate with a current lower than the rated current.

Therefore, when using a thin conductor such as a heat-resistant wire, it is necessary to select the circuit breaker rated current with a margin of safety in terms of the load current.

Test copper conductor

Circuit breaker rated current (A)	Thickness of 600 V Vinyl insulated wire (mm²)
15 or less	ø 1.6mm
20	ø 2mm
30	5.5
40	8
50	14
60	14
75	22
100	38
125	60
150	60
175	100
200	100
225	150
250	150
300	200
350	250
400	2×100
500	2×150
600	2×200

The table below shows the size of the test copper bars. (Reference)

Test copper bars

Circuit breaker rated current (A)	Copper strip	
	Number	Dimensions mm
500	2	30 × 5
600	2	40 × 5
800	2	50 × 5
1000	2	60 × 5
1250	2	80 × 5
1600	2	50 × 10
2000	2	75 × 10
2500	2	100 × 10
3000	2	150 × 10

3 Application of circuit breakers and earth leakage circuit breakers based on transformer capacity

The graph below is a table to calculate the short-circuit current from the capacity of the transformer and the thickness and length of the wire, and simply select a circuit breaker/earth leakage circuit breaker that satisfies the breaking capacity.

How to read the graph

(1) Select the transformer capacity (kVA) on the vertical axis.
(2) Select the length (m) of the wire from the transformer to the circuit breaker on the horizontal axis.
(3) The intersection of (1) and (2) shows the circuit breaker that can be applied.

The breaking capacity is calculated based on the symmetrical value (sym.).
The calculation conditions are based on the calculation of short-circuit current on page 9-10 onward, but the wire is single core, closed (50 Hz).

Example

Voltage 3-phase	420 V
Transformer capacity	75kVA
Wire thickness	14mm²
Wire length	20m

In this case, based on the graph below, the intersection is A, and the applicable circuit breakers are PS50-NF or PZS50-NF.

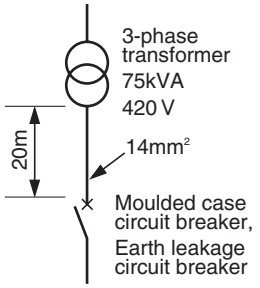

■ In the case of a 3-phase circuit

Secondary voltage 420V AC

● 50A・60A Frame — Wire thickness 14mm²

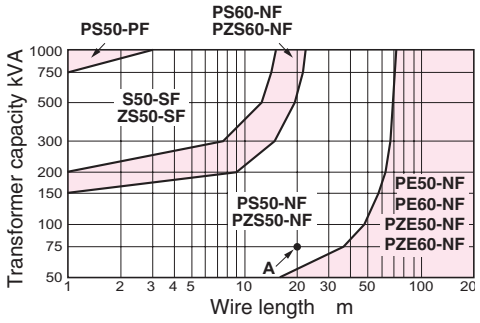

● 400A Frame — Wire thickness 325mm²

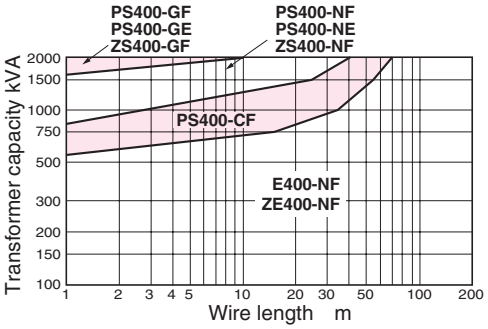

● 100A・125A Frame — Wire thickness 38mm²

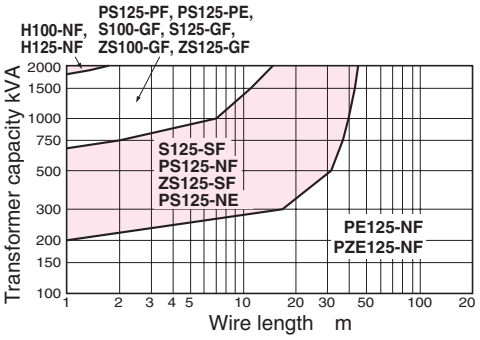

● 630A・800A Frame — 1500A Busduct

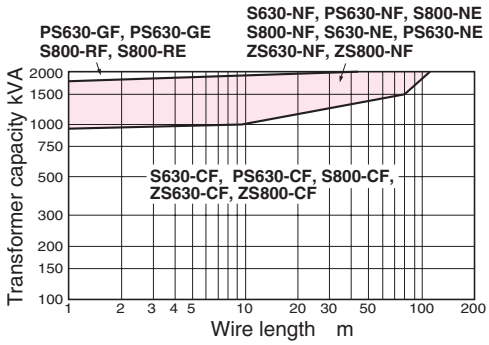

● 225A・250A Frame — Wire thickness 100mm²

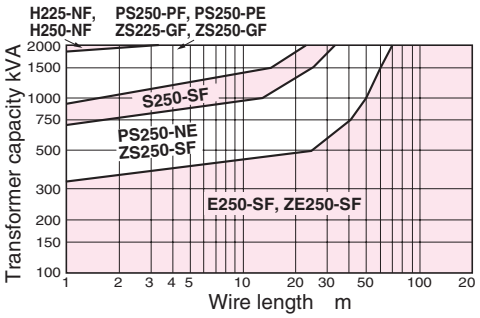

● 1000A・1250A Frame — 1500A Busduct

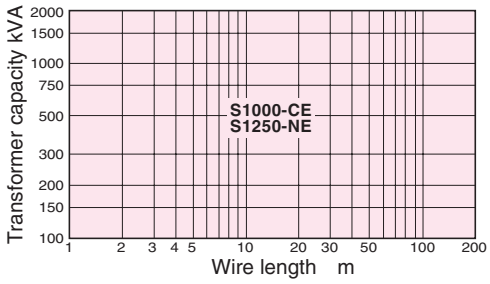

■ In the case of a 3-phase circuit

Secondary voltage 210V AC

● 50A・60A Frame — Wire thickness 14mm²

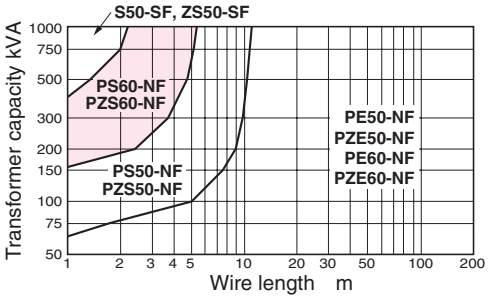

● 100A・125A Frame — Wire thickness 38mm²

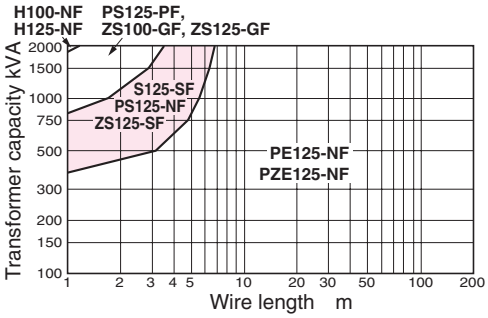

● 225A・250A Frame — Wire thickness 100mm²

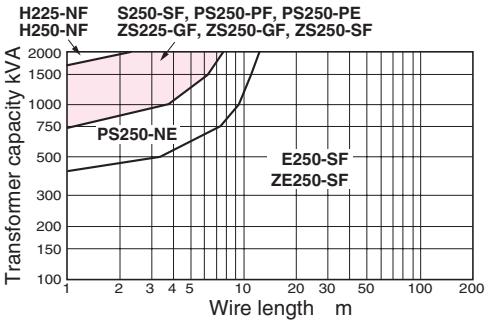

● 400A Frame — Wire thickness 325mm²

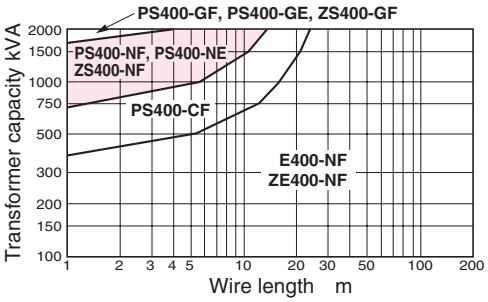

● 630A・800A Frame — 1500A Busduct

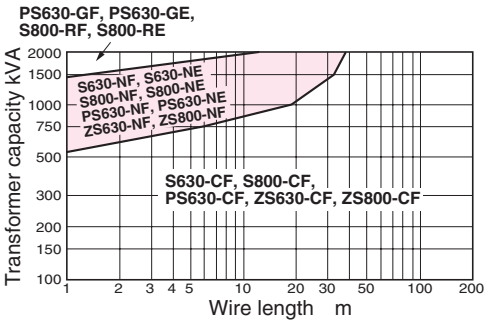

■ In the case of a single-phase 3-wire circuit

Between external cables 210V AC

● 30A Frame — Wire thickness 8mm²

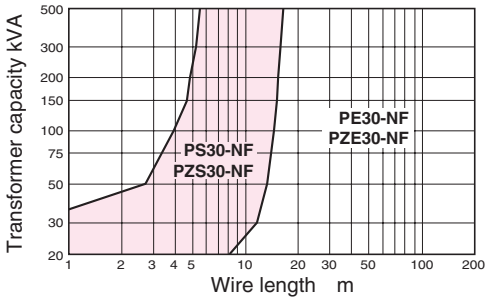

● 50A・60A Frame — Wire thickness 14mm²

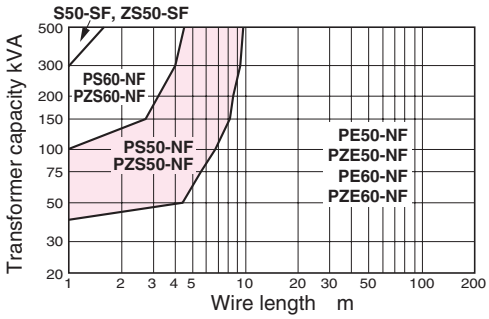

● 100A・125A Frame — Wire thickness 38mm²

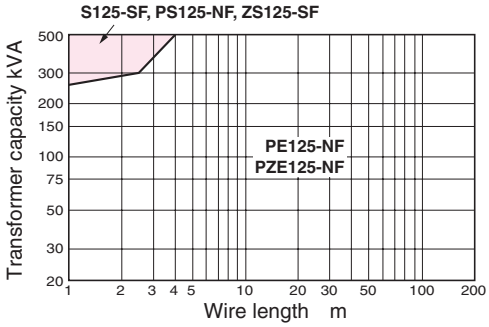

● 225A・250A Frame — Wire thickness 100mm²

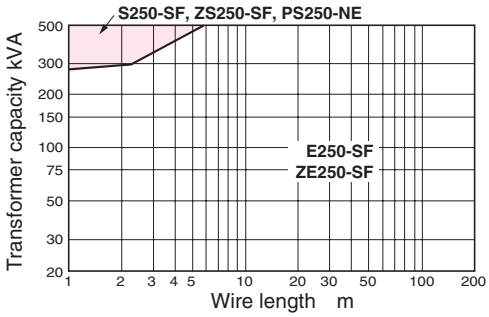

● 400A Frame — Wire thickness 325mm²

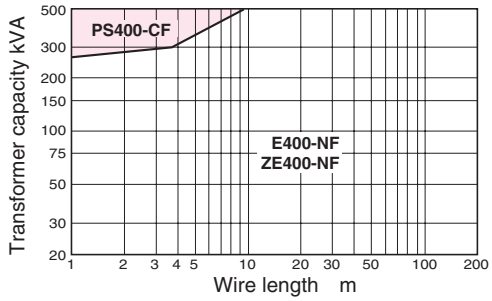

4 Application of circuit breakers based on breaking capacity

240V AC

Transformer capacity kVA	20 or less	30	50	75	100	150	200	300	500	750	1000	1500	2000	3000
Percent impedance of the transformer %	2.5	2.5	2.5	2.85	2.9	3.1	3.1	3.5	4.0	4.8	5.3	6.1	6.1	6.1
Circuit breaker breaking capacity kA sym.	2.5			7.5		15		30	35		50		85	100 125 130 150 200
30A Frame	PE30-NF	PS30-NF												
50A		PE50-NF			PS50-NF				S50-SF			PS50-PF		
60A		PE60-NF						PS60-NF						
100/125A								PE125-NF	S125-SF, PS125-NF			PS125-PF	H100-NF, H125-NF	L100-NF, L125-NF
225/250A								E250-SF		S250-SF, PS250PF, PS250-PE			H225-NF, H250-NF	L225-NF, L250-NF
400A								E400-NF		PS400-CF	PS400-NF PS400-NE	PS400-GF PS400-GE	PH400-CF PH400-CE H400-NE	L400-NE
600/630A										S630-CF PS630-CF	S630-NF S630-NE PS630-NF PS630-NE	PS630-GF PS630-GE	PH630-CF PH630-CE H630-NE	L630-NE
800A										S800-CF	S800-NF S800-NE	S800-RF S800-RE	S800-PF S800-PE H800-NE	L800-NE
1000A													S1000-CE	S1250-GE TL-1000NE
1200A													S1250-NE	S1250-GE TL-1200NE
1600A													S1600-NE	
2000A													XS2000NE	
2500A													XS2500NE	
3200A													XS3200NE	

1. The average value was used for the percent impedance of the transformer.
2. The ratio between the transformer and the breaking capacity assumes a short-circuit directly under the secondary voltage of 240V for a 3-phase transformer.

415V AC

Transformer capacity kVA	30 or less	50	75 100	150	200	300	500	750	1000	1500	2000	3000	4000—5000
Percent impedance of the transformer %	2.5	2.5	2.85	3.1	3.1	3.5	4.0	4.8	5.3	6.1	6.1	6.1	6.1
Circuit breaker breaking capacity kA sym.	2.5		7.5		10			25	30	36	50	65 70	85 100 110 125 150 200
30A Frame	PS30-NF												
50A	PE50-NF		PS50-NF						S50-SF			PS50-PF	
60A	PE60-NF			PS60-NF									
100/125A				PE125-NF					S125-SF	PS125-NF PS125-NE	S100-GF S125-GF	PS125-PF PS125-PE	H100-NF H125-NF L100-NF L125-NF
225/250A								E250-SF		PS250-NE		PS250-PF PS250-PE	H225-NF H250-NF L225-NF L250-NF
400A								E400-NF		PS400-CF	PS400-NF PS400-NE	PS400-GF PS400-GE	PH400-CF PH400-CE H400-NE L400-NE
600/630A										S630-CF PS630-CF	S630-NF PS630-NF S630-NE PS630-NE	PS630-GF PS630-GE	PH630-CF PH630-CE H630-NE L630-NE
800A										S800-CF	S800-NF S800-NE	S800-RF S800-RE	S800-PF S800-PE H800-NE L800-NE
1000A												S1000-CE	S1250-GE TL-1000NE
1200A												S1250-NE	S1250-GE TL-1200NE
1600A												S1600-NE	
2000A												XS2000NE	
2500A												XS2500NE	
3200A												XS3200NE	

1. The average value was used for the percent impedance of the transformer.
2. The ratio between the transformer and the breaking capacity assumes a short-circuit directly under the secondary voltage of 415V for a 3-phase transformer.

5 Application of earth leakage circuit breakers based on breaking capacity

240V AC

Transformer capacity kVA	20 or less	30	50	75	100	150	200	300	500	750	1000	1500	2000	3000
Percent impedance of the transformer %	2.5	2.5	2.5	2.85	2.9	3.1	3.1	3.5	4.0	4.8	5.3	6.1	6.1	6.1
Circuit breaker breaking capacity kA sym.	2.5			7.5		15		30	35		50	85	100	130
30A Frame	PZE30-NF		PZS30-NF											
50A			PZE50-NF		PZS50-NF				ZS50-SF					
60A			PZE60-NF			PZS60-NF								
100/125A						PZE125-NF			ZS125-SF		ZS100-GF ZS125-GF			
225/250A							ZE250-SF			ZS250-SF, ZS225/250-GF				
400A							ZE400-NF				ZS400-NF	ZS400-GF		
600/630A										ZS630-CF	ZS630-NF			
800A										ZS800-CF	ZS800-NF			

1. The average value was used for the percent impedance of the transformer.
2. The ratio between the transformer and the breaking capacity assumes a short-circuit directly under the secondary voltage of 240V for a 3-phase transformer.

415V AC

Transformer capacity kVA	30 or less	50	75 100	150	200	300	500	750	1000	1500	2000	3000
Percent impedance of the transformer %	2.5	2.5	2.85	3.1	3.1	3.5	4.0	4.8	5.3	6.1	6.1	6.1
Circuit breaker breaking capacity kA sym.	2.5			7.5	10			25	30	36 40	50	65 70 85
30A Frame	PZS30-NF											
50A	PZE50-NF		PZS50-NF				ZS50-SF					
60A	PZE60-NF			PZS60-NF								
100/125A				PZE125-NF				ZS125-SF			ZS100/125-GF	
225/250A							ZE250-SF		ZS250-SF		ZS225/250-GF	
400A							ZE400-NF			ZS400-NF		ZS400-GF
600/630A									ZS630-CF	ZS630-NF		
800A									ZS800-CF	ZS800-NF		

1. The average value was used for the percent impedance of the transformer.
2. The ratio between the transformer and the breaking capacity assumes a short-circuit directly under the secondary voltage of 415V for a 3-phase transformer.

6 Selection of earth leakage circuit breakers for the purpose of protection

If the purpose of protection, load equipment, and installation location, etc. are not considered when selecting the earth leakage circuit breaker, an electric shock accident may occur or unnecessary trips may occur, which may hinder the smooth progress of work at the site.

Selection for the purpose of protection

<table>
<tr><th>Purpose</th><th>Type</th><th>Sensitivity current</th><th>Usage conditions</th></tr>
<tr><td rowspan="2">For electric shock prevention</td><td>High-sensitivity instantaneous tripping type</td><td>15mA
30mA</td><td>Cases that specify the use of high-sensitivity instantaneous tripping type in the technical standards and interior wiring regulations of electrical equipment.
Cases subject to occupational safety and health regulations.</td></tr>
<tr><td>Medium sensitivity instantaneous tripping type</td><td>100mA
200mA
500mA</td><td>When the circuit of the equipment is securely grounded to prevent electric shock in the event of earth leakage.
In this case, the grounding resistance value of the equipment should be as follows.
<table>
<tr><th rowspan="2">Sensitivity current (mA)</th><th colspan="2">Allowable contact voltage</th></tr>
<tr><th>25 V</th><th>50 V</th></tr>
<tr><td>100</td><td>250Ω or less</td><td>500Ω or less</td></tr>
<tr><td>200</td><td>125Ω or less</td><td>250Ω or less</td></tr>
<tr><td>500</td><td>50Ω or less</td><td>100Ω or less</td></tr>
</table>
⇩ A state in which the user’ s body is significantly wet. A state in which the user's body is in constant contact with metallic electrical equipment or a part of it due to its structure. (Type 2 contact voltage)
⇩ In cases other than types 1 and 2, there is a high risk if a contact voltage is applied when the user's body is in a normal state. (Type 3 contact state)</td></tr>
<tr><td>Earth leakage fire / ground fault arc For protection</td><td>Medium sensitivity time delay tripping type
·
Medium sensitivity instantaneous tripping type</td><td>100mA
200mA
500mA</td><td>When coordinating ground fault protection between the main line and branch circuit against ground fault accidents.</td></tr>
</table>

Ground fault protection cooperation

When selective protection is coordinated against ground faults, the time delay tripping type is used for the main line and the instantaneous tripping type is used for the branch circuit. (Figure b)
If the time delay tripping type is not used for the main line, depending on the magnitude of the ground fault current due to the ground fault in one branch circuit, the earth leakage circuit breakers for the main line and the branch circuit may trip at the same time, and power failure will occur in other non-faulty circuits. (Figure a) shows the operating characteristic curve in this case.

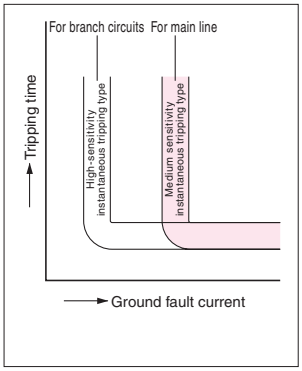

(Figure a)

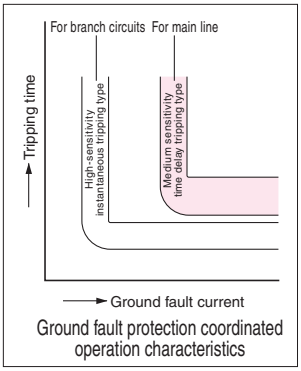

Ground fault protection coordinated operation characteristics

(Figure b)

Earth leakage trip characteristics

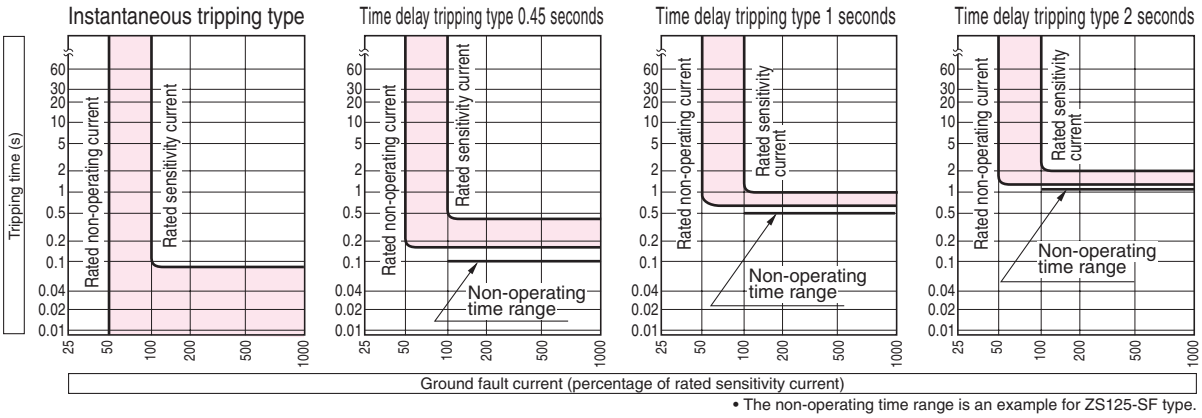

• The non-operating time range is an example for ZS125-SF type.

7 Selection of circuit breakers and earth leakage circuit breakers for motor circuit main lines

To select the circuit breaker for the main line of circuits that include loads such as electric motors, follow the procedure below.

Load type	Conditions	Allowable current of wire I_W	Rated capacity of circuit breaker I_N
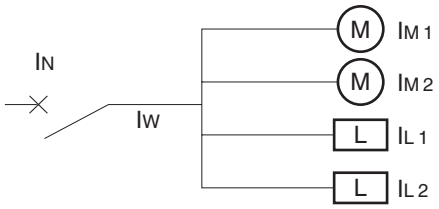 I_M : Load current of electric motor, etc. I_L : Load current other than electric motor, etc.	$\Sigma I_M \leq \Sigma I_L$	$I_W \geq \Sigma I_M + \Sigma I_L$	$I_N \leq 3 \Sigma I_M + \Sigma I_L$ or $I_N \leq 2.5 I_W$ whichever is smaller. However, when $I_W > 100$ A and does not correspond to the standard rated current value of the circuit breaker, the latest higher rating may be used.
	$50A \geq \Sigma I_M > \Sigma I_L$	$I_W \geq 1.25 \Sigma I_M + \Sigma I_L$	
	$50A < \Sigma I_M > \Sigma I_L$	$I_W \geq 1.1 \Sigma I_M + \Sigma I_L$	

Rated current (A) of circuit breakers/earth leakage circuit breakers for main lines of 200/220V AC 3-phase induction motors

Total motor kW (kW or less)	Max. operational current (A or less)	Largest motor (kW) : Motor capacity (A) : Full-load current																	
		0.75	1.5	2.2	3.7	5.5	7.5	11	15	18.5	22	30	37	45	55	75	90	110	132
		4.8	8	11.1	17.4	26	34	48	65	79	93	124	152	190	230	310	360	440	500
3	15	20	30																
4.5	20	30			50														
6.3	30	40			50	60													
8.2	40	50			60	75	100												
12	50	60			75		100	125											
15.7	75	100						125	150										
19.5	90	100						125		150									
23.2	100	125								150	200								
30	125	150									200								
37.5	150	200										225							
45	175	200										225	300						
52.5	200	225										225	300	400					
63.7	250	300											400		500				
75	300	400													500				
86.2	350	400													500	600			
97.5	400	500														600	700		
112.5	450	500														700			
125	500	600														700		1000	
150	600	700															800	1000	
175	700	800																1000	
200	800	1000																	

Rated current (A) of circuit breakers/earth leakage circuit breakers for main lines of 400/440V AC 3-phase induction motors

Total motor kW (kW or less)	Max. operational current (A or less)	Largest motor (kW) : Motor capacity (A) : Full-load current																	
		0.75	1.5	2.2	3.7	5.5	7.5	11	15	18.5	22	30	37	45	55	75	90	110	132
		2.4	4	5.5	8.7	13	17	24	32	39	46	62	76	95	115	155	180	220	250
3	7.5	15																	
4.5	10	15			30														
6.3	15	20			30	40													
8.2	20	30				40	50												
12	25	30				40	50	75											
15.7	38	50					60	75	100										
19.5	45	50					60	75	100										
23.2	50	60					75		100		100								
30	63	75						100			100								
37.5	75	100								125									
45	88	100								125			150						
52.5	100	125											150	200					
63.7	125	150												200	225				
75	150	200													225				
86.2	175	200													225	300			
97.5	200	225													225	300	400		
112.5/125	225/250	300														400		500	
150/175	300/350	400																500	
200	400	500																	
250	500	600																	
300/350	600/700	800																	
400/450	800/900	1000																	
500	1000	1200																	

Remarks :
1. The total load current of the motor is based on the specified current of the motor in Document 3-7-3 of the interior wiring regulations.
2. The starting condition of the motor is selected to be within 10 seconds at 600% of the total load current, and the inrush current is selected to be within 1700% of the total load current.
3. The value of the largest motor (kW) can also be applied to the total capacity of the motors that start at the same time.

8 Selection of breakers for protection of motor branch circuits

This table assumes that the motor branch circuit is protected against overcurrent by an electromagnetic relay and against short-circuit current by a moulded case circuit breaker.

For protection of 200/220V AC 3-phase induction motors

Rated breaking capacity (kA) 230V AC I_{cu} (sym)			2.5		7.5		15		30		35		50	
Output (kW)	Full-load current(A)	Max. starting current(A)	Type	Rated current(A)	Type	Rated current(A)	Type	Rated current(A)	Type	Rated current(A)	Type	Rated current(A)	Type	Rated current(A)
0.75	3.71	28.4	**PE30-NF**	15	**PS30-NF**	15							**PS125-NF**	15
1.5	6.74	56	**PE30-NF**	15	**PS30-NF**	15	**PS50-NF**	15					**PS125-NF**	20
2.2	10.4	96	**PE30-NF**	30	**PS30-NF**	30	**PS50-NF**	30					**PS125-NF**	30 ※
3.7	15.6	139			**PE50-NF**	40	**PS50-NF**	40					**PS125-NF**	40
5.5	22.8	203			**PE60-NF**	60			**PS60-NF**	60			**PS125-NF**	60
7.5	30.2	264							**PE125-NF**	75			**PS125-NF**	75
11	44.9	380							**PE125-NF**	100			**PS125-NF**	125 ※※
15	60	540									**E250-SF**	125		
18.5	72	668									**E250-SF**	150		
22	81.9	744									**E250-SF**	175		
30	112	1090									**E250-SF**	200		
37	141	1500									**E250-SFH**	225 ※		
45	168	1780									**E400-NF**	350	**PS400-CF**	350 ⑯
55	211	1960											**S630-CF**	500
75	272	2080											**S630-CF**	630
90	332	2600											**S800-CF**	800
110	380	2980												
132	450	3460												

For protection of 400/440V AC 3-phase induction motors

Rated breaking capacity (kA) 415V AC I_{cu} (sym)			2.5		7.5		10		25		36		40	
Output (kW)	Full-load current(A)	Max. starting current(A)	Type	Rated current(A)	Type	Rated current(A)	Type	Rated current(A)	Type	Rated current(A)	Type	Rated current(A)	Type	Rated current(A)
0.75	1.9	14.2	**PS30-NF**	10							**PS125-NF**	15		
1.5	3.4	28	**PS30-NF**	15							**PS125-NF**	15		
2.2	5.2	48	**PS30-NF**	15	**PS50-NF**	15					**PS125-NF**	20		
3.7	7.8	70	**PS30-NF**	20	**PS50-NF**	20					**PS125-NF**	30		
5.5	11.4	102	**PS30-NF**	30	**PS50-NF**	30					**PS125-NF**	40		
7.5	15.1	132	**PE50-NF**	40	**PS50-NF**	40					**PS125-NF**	40		
11	22.5	190	**PE60-NF**	60			**PE125-NF**	60			**PS125-NF**	50		
15	30	270					**PE125-NF**	75			**PS125-NF**	75		
18.5	36	334					**PE125-NF**	100			**PS125-NF**	100		
22	41	372					**PE125-NF**	125			**PS125-NF**	125 ※※		
30	56	545							**E250-SF**	125			**S250-SF**	125
37	70.5	750							**E250-SF**	150			**S250-SF**	150
45	84	890							**E250-SF**	175			**S250-SF**	175
55	105	980							**E250-SF**	200			**S250-SF**	200
75	136	1040							**E250-SFH**	225	**PS400-CF**	300 ⑰	**S250-SFH**	225
90	166	1300							**E400-NF**	350	**PS400-CF**	350 ⑯		
110	190	1490									**PS400-CF**	400 ⑯		
132	225	1730												
160	273	2170												

Remark 1.
Motor starting conditions
The inrush current is assumed to be as follows:

Motor output	Inrush current
0.75 ~ 7.5kW	Full-load current x1600% max.
11 ~ 45kW	Full-load current x1700% max.
55 ~ 160kW	Full-load current x1800% max.

Exceptions:
Note ⑯ : Full-load x 1600% max.
Note ⑰ : Full-load x 1700% max.
When the inrush current exceeds the above values, the breaker may trip.
The starting time is assumed to be 6 seconds max. at the max. starting current.
Exceptions:
Note ※ : 5 seconds max. at the max. starting current. When the max. starting current flows through the breaker for a period of time exceeding the above max. starting time, the breaker may trip.

Remark 2.
The full-load current and the max. starting current are determined with reference to those of highly efficient 3-phase induction motors (4 poles) from individual manufacturers. Please consult us if the full-load current or the max. starting current of your motor is different significantly from the values shown in the table.

Note ※※ : Operates at 500% of rated current for a minimum of 2 seconds and a maximum of 20 seconds.
Does not comply with the following regulations of interior wiring regulations JEAC 8001. Document number 3-7-5
In the case of rated current of 125A or more 6 seconds or more at 500% of rated current.

Remark 3.
- In regard to electronic breakers, it is assumed that the protection characteristic setting dial is set so that the long time delay tripping time is the longest.
- In regard to breakers with the instantaneous trip current being adjustable, it is assumed that the instantaneous trip current is set to the max. value.
- Protective coordination with the motor is analyzed for on the basis of 40℃ cold start characteristics of the breaker.

85		100		125		150		200		Rated breaking capacity (kA) 230V AC I_{cu} (sym)		
Type	Rated current(A)	Type	Rated current(A)	Type	Rated current(A)	Type	Rated current(A)	Type	Rated current(A)	Output (kW)	Full-load current(A)	Max. starting current(A)
PS125-PF	15					**H100-NF**	15	**L100-NF**	15	0.75	3.71	28.4
PS125-PF	20					**H100-NF**	15	**L100-NF**	15	1.5	6.74	56
PS125-PF	30 ※					**H100-NF**	20	**L100-NF**	20	2.2	10.4	96
PS125-PF	40					**H100-NF**	30	**L100-NF**	30	3.7	15.6	139
PS125-PF	60					**H100-NF**	50	**L100-NF**	50	5.5	22.8	203
PS125-PF	75					**H100-NF**	60	**L100-NF**	60	7.5	30.2	264
PS125-PF	100					**H100-NF**	100	**L100-NF**	100	11	44.9	380
PS125-PF	125 ※※					**H125-NF**	125	**L125-NF**	125	15	60	540
PS250-PF	125					**H225-NF**	150	**L225-NF**	150	18.5	72	668
PS250-PF	150					**H225-NF**	175	**L225-NF**	175	22	81.9	744
S250-SF	200					**H225-NF**	200	**L225-NF**	200	30	112	1090
S250-SFH	225 ※					**H400-NE**	250	**L400-NE**	250	37	141	1500
PS400-NEH	250	**PS400-GEH**	250	**PH400-CEH**	250	**H400-NE**	300	**L400-NE**	300	45	168	1780
PS400-NEH	300	**PS400-GEH**	300	**PH400-CEH**	300	**H400-NE**	350	**L400-NE**	350	55	211	1960
PS400-NEH	350	**PS400-GEH**	350	**PH400-CEH**	350	**H630-NE**	500	**L630-NE**	500	75	272	2080
S630-NE	600	**S800-RE**	600	**S800-PE**	600	**H630-NE**	630	**L630-NE**	630	90	332	2600
S800-NE	700	**S800-RE**	700	**S800-PE**	700	**H800-NE**	700	**L800-NE**	700	110	380	2980
S800-NE	800 ⑰	**S800-RE**	800 ⑰	**S800-PE**	800 ⑰	**H800-NE**	800 ⑰	**L800-NE**	800 ⑰	132	450	3460

50		65		70		110		125		200		Rated breaking capacity (kA) 415V AC I_{cu} (sym)		
Type	Rated current(A)	Type	Rated current(A)	Type	Rated current(A)	Type	Rated current(A)	Type	Rated current(A)	Type	Rated current(A)	Output (kW)	Full-load current(A)	Max. starting current(A)
		S100-GF	15	**PS125-PF**	15			**H100-NF**	15	**L100-NF**	15	0.75	1.9	14.2
		S100-GF	15	**PS125-PF**	15			**H100-NF**	15	**L100-NF**	15	1.5	3.4	28
		S100-GF	15	**PS125-PF**	20			**H100-NF**	15	**L100-NF**	15	2.2	5.2	48
		S100-GF	15	**PS125-PF**	30			**H100-NF**	15	**L100-NF**	15	3.7	7.8	70
		S100-GF	30	**PS125-PF**	40			**H100-NF**	30	**L100-NF**	30	5.5	11.4	102
		S100-GF	40	**PS125-PF**	40			**H100-NF**	30	**L100-NF**	30	7.5	15.1	132
		S100-GFH	40	**PS125-PF**	50			**H100-NF**	50	**L100-NF**	50	11	22.5	190
		S100-GFH	50	**PS125-PF**	75			**H100-NF**	60	**L100-NF**	60	15	30	270
		S100-GFH	60	**PS125-PF**	75			**H100-NF**	75	**L100-NF**	75	18.5	36	334
		S100-GFH	75	**PS125-PF**	100			**H100-NF**	100	**L100-NF**	100	22	41	372
		S100-GFH	100	**PS125-PF**	125 ※※			**H100-NF**	100	**L100-NF**	100	30	56	545
				PS250-PF	150			**H225-NF**	125	**L225-NF**	125	37	70.5	750
				PS250-PF	175			**H225-NF**	150	**L225-NF**	150	45	84	890
				PS250-PF	200	**PH400-CEH**	**175**	**H225-NF**	175 ⑰	**L225-NF**	175 ⑰	55	105	980
PS400-NEH	200			**PS400-GEH**	200	**PH400-CEH**	**200**	**H225-NF**	225 ⑰	**L225-NF**	225 ⑰	75	136	1040
PS400-NEH	250			**PS400-GEH**	250	**PH400-CEH**	**250**	**H400-NE**	300	**L400-NE**	300	90	166	1300
PS400-NEH	250			**PS400-GEH**	250	**PH400-CEH**	**250**	**H400-NE**	350	**L400-NE**	350	110	190	1490
PS400-NEH	300			**PS400-GEH**	300	**PH400-CEH**	**300**	**H400-NE**	400	**L400-NE**	400	132	225	1730
PS400-NEH	350			**PS400-GEH**	350	**PH400-CEH**	**350**	**H630-NE**	500	**L630-NE**	500	160	273	2170

8 Selection of breakers for protection of motor branch circuits [approved by ship classification societies]

This table assumes that the motor branch circuit is protected against overcurrent by an electromagnetic relay and against short-circuit current by a moulded case circuit breaker.

For protection of 200/220V AC 3-phase induction motors

Rated breaking capacity (kA) 230V AC I_{cu} (sym)			2.5		7.5		15		30		35		50	
Output (kW)	Full-load current(A)	Max. starting current(A)	Type	Rated current(A)	Type	Rated current(A)	Type	Rated current(A)	Type	Rated current(A)	Type	Rated current(A)	Type	Rated current(A)
0.75	3.71	28.4	**PE30-NF**	15	**PS30-NF**	15							**PS125-NF**	15
1.5	6.74	56	**PE30-NF**	15	**PS30-NF**	15	**PS50-NF**	15					**PS125-NF**	20
2.2	10.4	96	**PE30-NF**	30	**PS30-NF**	30	**PS50-NF**	30					**PS125-NF**	30 ※
3.7	15.6	139			**PE50-NF**	40	**PS50-NF**	40					**PS125-NF**	40
5.5	22.8	203			**PE60-NF**	60			**PS60-NF**	60			**PS125-NF**	60
7.5	30.2	264							**PE125-NF**	75			**PS125-NF**	75
11	44.9	380							**PE125-NF**	100			**PS125-NF**	125 ※※
15	60	540									**E250-SF**	125		
18.5	72	668									**E250-SF**	150		
22	81.9	744									**E250-SF**	175		
30	112	1090									**E250-SF**	200		
37	141	1500									**E400-NF**	300		
45	168	1780									**E400-NF**	350	**PS400-CF**	350 ⑯
55	211	1960											**S630-CF**	500
75	272	2080											**S630-CF**	630
90	332	2600											**S800-CF**	800
110	380	2980												
132	450	3460												

For protection of 400/440V AC 3-phase induction motors

Rated breaking capacity (kA) 440V AC I_{cu} (sym)			2.5		7.5		10		15		25		30	
Output (kW)	Full-load current(A)	Max. starting current(A)	Type	Rated current(A)	Type	Rated current(A)	Type	Rated current(A)	Type	Rated current(A)	Type	Rated current(A)	Type	Rated current(A)
0.75	1.9	14.2	**PS30-NF**	10							**PS125-NF**	15		
1.5	3.4	28	**PS30-NF**	15							**PS125-NF**	15		
2.2	5.2	48	**PS30-NF**	15	**PS50-NF**	15					**PS125-NF**	20		
3.7	7.8	70	**PS30-NF**	20	**PS50-NF**	20					**PS125-NF**	30		
5.5	11.4	102	**PS30-NF**	30	**PS50-NF**	30					**PS125-NF**	40		
7.5	15.1	132	**PE50-NF**	40	**PS50-NF**	40					**PS125-NF**	40		
11	22.5	190	**PE60-NF**	60			**PE125-NF**	60			**PS125-NF**	50		
15	30	270					**PE125-NF**	75			**PS125-NF**	75		
18.5	36	334					**PE125-NF**	100			**PS125-NF**	100		
22	41	372					**PE125-NF**	125			**PS125-NF**	125 ※※		
30	56	545							**E250-SF**	125			**S250-SF**	125
37	70.5	750							**E250-SF**	150			**S250-SF**	150
45	84	890							**E250-SF**	175			**S250-SF**	175
55	105	980							**E250-SF**	200			**S250-SF**	200
75	136	1040											**PS400-CF**	300 ⑰
90	166	1300											**PS400-CF**	350 ⑯
110	190	1490											**PS400-CF**	400 ⑯
132	225	1730												
160	273	2170												

Remark 1.
Motor starting conditions
The inrush current is assumed to be as follows:

Motor output	Inrush current
0.75 ~ 7.5kW	Full-load current x1600% max.
11 ~ 45kW	Full-load current x1700% max.
55 ~ 160kW	Full-load current x1800% max.

Exceptions:
Note ⑯ : Full-load x 1600% max.
Note ⑰ : Full-load x 1700% max.
When the inrush current exceeds the above values, the breaker may trip.
The starting time is assumed to be 6 seconds max. at the max. starting current.
Exceptions:
Note ※ : 5 seconds max. at the max. starting current. When the max. starting current flows through the breaker for a period of time exceeding the above max. starting time, the breaker may trip.

Remark 2.
The full-load current and the max. starting current are determined with reference to those of highly efficient 3-phase induction motors (4 poles) from individual manufacturers. Please consult us if the full-load current or the max. starting current of your motor is different significantly from the values shown in the table.

Note ※※ : Operates at 500% of rated current for a minimum of 2 seconds and a maximum of 20 seconds.
Does not comply with the following regulations of interior wiring regulations JEAC 8001. Document number 3-7-5
In the case of rated current of 125A or more 6 seconds or more at 500% of rated current.

Remark 3.
- In regard to electronic breakers, it is assumed that the protection characteristic setting dial is set so that the long time delay tripping time is the longest.
- In regard to breakers with the instantaneous trip current being adjustable, it is assumed that the instantaneous trip current is set to the max. value.
- Protective coordination with the motor is analyzed for on the basis of 40℃ cold start characteristics of the breaker.

85		100		125		150		200		Rated breaking capacity (kA) 230V AC I_{cu} (sym)		
Type	Rated current(A)	Type	Rated current(A)	Type	Rated current(A)	Type	Rated current(A)	Type	Rated current(A)	Output (kW)	Full-load current(A)	Max. starting current(A)
PS125-PF	15					**H100-NF**	15	**L100-NF**	15	0.75	3.71	28.4
PS125-PF	20					**H100-NF**	15	**L100-NF**	15	1.5	6.74	56
PS125-PF	30 ※					**H100-NF**	20	**L100-NF**	20	2.2	10.4	96
PS125-PF	40					**H100-NF**	30	**L100-NF**	30	3.7	15.6	139
PS125-PF	60					**H100-NF**	50	**L100-NF**	50	5.5	22.8	203
PS125-PF	75					**H100-NF**	60	**L100-NF**	60	7.5	30.2	264
PS125-PF	125 ※※					**H100-NF**	100	**L100-NF**	100	11	44.9	380
PS250-PF	125					**H125-NF**	125	**L125-NF**	125	15	60	540
PS250-PF	125					**H225-NF**	150	**L225-NF**	150	18.5	72	668
PS250-PF	150					**H225-NF**	175	**L225-NF**	175	22	81.9	744
S250-SF	200					**H225-NF**	200	**L225-NF**	200	30	112	1090
S250-SFH	225 ※					**H400-NE**	250	**L400-NE**	250	37	141	1500
PS400-NEH	250	**PS400-GEH**	250	**PH400-CE**	250 ①	**H400-NE**	300	**L400-NE**	300	45	168	1780
PS400-NEH	300	**PS400-GEH**	300	**PH400-CE**	300	**H400-NE**	350	**L400-NE**	350	55	211	1960
PS400-NEH	350	**PS400-GEH**	350	**S800-PE**	500	**H630-NE**	500	**L630-NE**	500	75	272	2080
S630-NE	600	**S800-RE**	600	**S800-PE**	600	**H630-NE**	630	**L630-NE**	630	90	332	2600
S800-NE	700	**S800-RE**	700	**S800-PE**	700	**H800-NE**	700	**L800-NE**	700	110	380	2980
S800-NE	800 ⑰	**S800-RE**	800 ⑰	**S800-PE**	800 ⑰	**H800-NE**	800 ⑰	**L800-NE**	800 ⑰	132	450	3460

45		50		65		100		120		180		Rated breaking capacity (kA) 440V AC I_{cu} (sym)		
Type	Rated current(A)	Type	Rated current(A)	Type	Rated current(A)	Type	Rated current(A)	Type	Rated current(A)	Type	Rated current(A)	Output (kW)	Full-load current(A)	Max. starting current(A)
		S100-GF	15					**H100-NF**	15	**L100-NF**	15	0.75	1.9	14.2
		S100-GF	15					**H100-NF**	15	**L100-NF**	15	1.5	3.4	28
		S100-GF	15					**H100-NF**	15	**L100-NF**	15	2.2	5.2	48
		S100-GF	15					**H100-NF**	15	**L100-NF**	15	3.7	7.8	70
		S100-GF	30					**H100-NF**	30	**L100-NF**	30	5.5	11.4	102
		S100-GF	40					**H100-NF**	30	**L100-NF**	30	7.5	15.1	132
		S100-GFH	40					**H100-NF**	50	**L100-NF**	50	11	22.5	190
		S100-GFH	50					**H100-NF**	60	**L100-NF**	60	15	30	270
		S100-GFH	60					**H100-NF**	75	**L100-NF**	75	18.5	36	334
		S100-GFH	75					**H100-NF**	100	**L100-NF**	100	22	41	372
		S100-GFH	100					**H100-NF**	100	**L100-NF**	100	30	56	545
		PS250-PF	150					**H225-NF**	125	**L225-NF**	125	37	70.5	750
		PS250-PF	175					**H225-NF**	150	**L225-NF**	150	45	84	890
		PS250-PF	200			**PH400-CE**	**175**	**H225-NF**	175 ⑰	**L225-NF**	175 ⑰	55	105	980
PS400-NEH	200			**PS400-GEH**	200	**PH400-CE**	**200** ①	**H225-NF**	225 ⑰	**L225-NF**	225 ⑰	75	136	1040
PS400-NEH	250			**PS400-GEH**	250	**PH400-CE**	**250** ①	**H400-NE**	300	**L400-NE**	300	90	166	1300
PS400-NEH	250			**PS400-GEH**	250	**PH400-CE**	**250** ①	**H400-NE**	350	**L400-NE**	350	110	190	1490
PS400-NEH	300			**PS400-GEH**	300	**PH400-CE**	**300** ⑰	**H400-NE**	400	**L400-NE**	400	132	225	1730
PS400-NEH	350			**PS400-GEH**	350			**H630-NE**	500 ②	**L630-NE**	500	160	273	2170

Note ①: For PH400-CE, use a breaker with I_n = 400A.

Note ②: I_{cu} of H630-NE is 125kA.

9 Selection of earth leakage circuit breakers for motor branch circuits

This table assumes that the motor branch circuit is protected against overcurrent by an electromagnetic switch and against short-circuit current by an earth leakage circuit breaker.

For protection of 200/220V AC 3-phase induction motors

Rated breaking capacity (kA) 230V AC I_{cu} (sym)			2.5		7.5		15		30		35		50	
Output (kW)	Full-load current (A)	Max. starting current (A)	Type	Rated current(A)	Type	Rated current (A)	Type	Rated current (A)	Type	Rated current (A)	Type	Rated current (A)	Type	Rated current (A)
0.75	3.71	28.4	**PZE30-NF**	10	**PZE50-NF**	15	**PZS50-NF**	15					**ZS50-SF**	15
1.5	6.74	56	**PZE30-NF**	20	**PZE50-NF**	20	**PZS50-NF**	20					**ZS50-SF**	20
2.2	10.4	96	**PZE30-NF**	30	**PZE50-NF**	30	**PZS50-NF**	30					**ZS50-SF**	30
3.7	15.6	139			**PZE50-NF**	50	**PZS50-NF**	50					**ZS50-SF**	40
5.5	22.8	203			**PZE60-NF**	60			**PZS60-NF**	60			**ZS50-SF**	40
7.5	30.2	264							**PZE125-NF**	75			**ZS50-SF**	50
11	44.9	380							**PZE125-NF**	100			**ZS125-SF**	75
15	60	540									**ZE250-SF**	125	**ZS125-SF**	100
18.5	72	668									**ZE250-SF**	150	**ZS125-SF**	125 ⑯
22	81.9	744									**ZE250-SF**	175		
30	112	1090									**ZE250-SF**	200		
37	141	1500									**ZE250-SF**	225 ⑯		
45	168	1780									**ZE400-NF**	350		
55	211	1960												
75	272	2080											**ZS630-CF**	630
90	332	2600											**ZS800-CF**	800
110	380	2980												
132	450	3460												

For protection of 400/440V AC 3-phase induction motors

Rated breaking capacity (kA) 415V AC I_{cu} (sym)			1.5		2.5		7.5		10		25		30	
Output (kW)	Full-load current(A)	Max. starting current(A)	Type	Rated current(A)	Type	Rated current(A)	Type	Rated current(A)	Type	Rated current(A)	Type	Rated current(A)	Type	Rated current(A)
0.75	1.9	14.2	**PZE30-NF**	5	**PZS30-NF**	5	**PZS50-NF**	15					**ZS50-SF**	15
1.5	3.4	28	**PZE30-NF**	10	**PZS30-NF**	10	**PZS50-NF**	15					**ZS50-SF**	15
2.2	5.2	48	**PZE30-NF**	15	**PZS30-NF**	15	**PZS50-NF**	15					**ZS50-SF**	15
3.7	7.8	70	**PZE30-NF**	20 ※	**PZS30-NF**	20 ※	**PZS50-NF**	20 ※					**ZS50-SF**	20
5.5	11.4	102	**PZE30-NF**	30 ※	**PZS30-NF**	30 ※	**PZS50-NF**	30 ※					**ZS50-SF**	30
7.5	15.1	132			**PZE50-NF**	40	**PZS50-NF**	40					**ZS50-SF**	40
11	22.5	190			**PZE60-NF**	60			**PZE125-NF**	60			**ZS50-SF**	40
15	30	270			**PZE60-NF**	60			**PZE125-NF**	60			**ZS50-SF**	50
18.5	36	334							**PZE125-NF**	75			**ZS125-SF**	60
22	41	372							**PZE125-NF**	100			**ZS125-SF**	75
30	56	545							**PZE125-NF**	125	**ZE250-SF**	125	**ZS125-SF**	100
37	70.5	750									**ZE250-SF**	150	**ZS125-SF**	125
45	84	890									**ZE250-SF**	175		
55	105	980									**ZE250-SF**	200		
75	136	1040									**ZE250-SF**	225 ⑰		
90	166	1300									**ZE400-NF**	350		
110	190	1490												
132	225	1730												
160	273	2170												

Remark 1.
Motor starting conditions
The inrush current is assumed to be as follows:

Motor output	Inrush current
0.75 ~ 7.5kW	Full-load current x1600% max.
11 ~ 45kW	Full-load current x1700% max.
55 ~ 160kW	Full-load current x1800% max.

Exceptions:
⑯ : Full-load x 1600% max.
⑰ : Full-load x 1700% max.
When the inrush current exceeds the above values, the earth leakage circuit breaker may trip.
The starting time is assumed to be 6 seconds max. at the max. starting current.
Exceptions:
Note ※ : 5 seconds max. at the max. starting current. When the max. starting current flows through the breaker for a period of time exceeding the above max. starting time, the earth leakage circuit breaker may trip.

Remark 2.
The full-load current and the max. starting current are determined with reference to those of highly efficient 3-phase induction motors (4 poles) from individual manufacturers. Please consult us if the full-load current or the max. starting current of your motor is different significantly from the values shown in the table.

Remark 3.
- In regard to breakers with the instantaneous trip current being adjustable, it is assumed that the instantaneous trip current is set to the max. value.
- Protective coordination with the motor is analyzed for on the basis of 40℃ cold start characteristics of the earth leakage circuit breaker.

85		100		Rated breaking capacity (kA) 230V AC I_{cu} (sym)		
Type	Rated current (A)	Type	Rated current (A)	Output (kW)	Full-load current (A)	Max. starting current (A)
ZS100-GF	15			0.75	3.71	28.4
ZS100-GF	15			1.5	6.74	56
ZS100-GF	30			2.2	10.4	96
ZS100-GF	40			3.7	15.6	139
ZS100-GF	40			5.5	22.8	203
ZS100-GF	50			7.5	30.2	264
ZS100-GF	75			11	44.9	380
ZS100-GF	100			15	60	540
ZS250-SF	150			18.5	72	668
ZS250-SF	175			22	81.9	744
ZS250-SF	200			30	112	1090
ZS250-SF	225 ⑯	**ZS400-GF**	250	37	141	1500
ZS400-NF	300	**ZS400-GF**	300	45	168	1780
ZS400-NF	400	**ZS400-GF**	400	55	211	1960
ZS630-NF	630			75	272	2080
ZS800-NF	800			90	332	2600
				110	380	2980
				132	450	3460

36		40		50		65		70		Rated breaking capacity (kA) 415V AC I_{cu} (sym)		
Type	Rated current(A)	Type	Rated current(A)	Type	Rated current(A)	Type	Rated current(A)	Type	Rated current(A)	Output (kW)	Full-load current(A)	Max. starting current(A)
						ZS100-GF	15			0.75	1.9	14.2
						ZS100-GF	15			1.5	3.4	28
						ZS100-GF	15			2.2	5.2	48
						ZS100-GF	15			3.7	7.8	70
						ZS100-GF	20			5.5	11.4	102
						ZS100-GF	40			7.5	15.1	132
						ZS100-GF	40			11	22.5	190
						ZS100-GF	50			15	30	270
						ZS100-GF	60			18.5	36	334
						ZS100-GF	75			22	41	372
		ZS250-SF	125			**ZS100-GF**	100			30	56	545
		ZS250-SF	150			**ZS225-GF**	125			37	70.5	750
		ZS250-SF	175			**ZS225-GF**	150			45	84	890
		ZS250-SF	200	**ZS400-NF**	250	**ZS225-GF**	200			55	105	980
		ZS250-SF	225 ⑰	**ZS400-NF**	300			**ZS400-GF**	300	75	136	1040
				ZS400-NF	350			**ZS400-GF**	350	90	166	1300
ZS630-CF	500			**ZS400-NF**	400			**ZS400-GF**	400	110	190	1490
ZS630-CF	600			**ZS400-NF**	400 ⑰			**ZS400-GF**	400 ⑰	132	225	1730
ZS630-CF	630			**ZS630-NF**	630					160	273	2170

10 Selection of circuit breakers for lamps and electric heating circuits

Select a circuit breaker with a rated current of 1.25 times or more of the max. operational current.
(Interior wiring regulation JEAC8001 3605-3 Article 3 specifies, "The load capacity of a branch circuit with a continuous load shall not exceed 80% of the rated current of the overcurrent circuit breaker that protects the branch circuit. [Recommendation]".

200V AC circuit

Rated breaking capacity (kA) 240V AC I_{cu} (sym)		2.5	5	7.5	15	30	35	50	85	100	125	150	200
Max. operational current (A)	Rated current of circuit breaker(A)												
12	15	TB-5S TB-5P TB-52C PE30-NF	TB-5S① TB-5P	PS30-NF	PS50-NF	S50-SF		PS50-PF	H100-NF H125-NF				L100-NF
16	20												
24	30												
32	40	TB-5S①, TB-5P		PE50-NF									
40	50												
48	60			PE60-NF	PS60-NF		S125-SF PS125-NF	PS125-PF					
60	75			PE125-NF									
80	100												
100	125												L125-NF
120	150	E250-SF					PS250-NE	PS250-PF PS250-PE	H225-NF				L225-NF
140	175												
160	200												
180	225												
200	250								H250-NF				L250-NF
240	300	E400-NF					PS400-CF	PS400-NF PS400-NE	PS400-GF PS400-GE	PH400-CF PH400-CE		H400-NE	L400-NE
280	350												
320	400												
400	500	S630-NF					S630-CF PS630-CF	S630-NF S630-NE PS630-NF PS630-NE	PS630-GF PS630-GE	PH630-CF PH630-CE		H630-NE	L630-NE
480	600/630												
560	700	S800-CF						S800-NF S800-NE	S800-RF S800-RE	S800-PF S800-PE		H800-NE	L800-NE
640	800												
800	1000	S1000-CE									S1250-GE	TL-1000NE	
960	1200	S1250-NE										TL-1200NE	
1120	1400	S1600-NE											
1280	1600												
1440	1800	XS2000NE											
1600	2000												
2000	2500	XS2500NE											
2240	2800	XS3200NE											
2560	3200												

400V AC circuit

Rated breaking capacity (kA) 415V AC I_{cu} (sym)		1.5	2.5	5	7.5	10	25	30	36	50	65	70	85	100	110	125	200
Max. operational current (A)	Rated current of circuit breaker(A)																
12	15	PE30-NF	TB-5S② TB-5P PS30-NF	PS50-NF		S50-SF		PS125-NF PS125-NE	S100-GF		PS50-PF	H100-NF H125-NF					L100-NF
16	20																
24	30																
32	40	TB-5S②, TB-5P, PE50-NF															
40	50																
48	60	PE60-NF		PS60-NF			S125-SF				PS125-PF PS125-PE						
60	75																
80	100																
100	125	PE125-NF							S125-GF								L125-NF
120	150	E250-SF						PS250-NE	PS250-PF PS250-PE			H225-NF H250-NF					L225-NF
140	175																
160	200																
180	225																
200	250																L250-NF
240	300	E400-NF						PS400-CF	PS400-NF PS400-NE	PS400-GF PS400-GE		PH400-CF PH400-CE			H400-NE		L400-NE
280	350																
320	400																
400	500	PS630-CF S630-CF							S630-NF S630-NE PS630-NF PS630-NE	PS630-GF PS630-GE		PH630-CF PH630-CE			H630-NE		L630-NE
480	600/630																
560	700	S800-CF							S800-NF S800-NE	S800-RF S800-RE		S800-PF S800-PE		H800-NE			L800-NE
640	800																
800	1000	S1000-CE									S1250-GE			TL-1000NE			
960	1200	S1250-NE												TL-1200NE			
1120	1400	S1600-NE															
1280	1600																
1440	1800	XS2000NE															
1600	2000																
2000	2500	XS2500NE															
2240	2800	XS3200NE															
2560	3200																

Note ① : 1P is 2.5 kA. ② : 1P cannot be applied.

11 Selection of earth leakage circuit breakers for lamps and electric heating circuits

Select a circuit breaker with a rated current of 1.25 times or more of the max. operational current.
(Interior wiring regulation JEAC8001 3605-3 Article 3 specifies, "The load capacity of a branch circuit with a continuous load shall not exceed 80% of the rated current of the overcurrent circuit breaker that protects the branch circuit. [Recommendation]".

200V AC circuit

Rated breaking capacity (kA) 240V AC I_{cu} (sym)		2.5	5	7.5	15	30	35	50	85	100	125
Max. operational current (A)	Rated current of circuit breaker(A)										
12	15	PZE30-NF TZ30EC	TZ50EE	PZS30-NF	PZS50-NF	ZS50-SF		ZS100-GF			
16	20										
24	30										
32	40	TZ-52C		PZE50-NF							
40	50										
48	60	PZE60-NF			PZS60-NF		ZS125-SF				
60	75	PZE125-NF									
80	100										
100	125	ZS125-SF						ZS125-GF			
120	150	ZE250-SF					ZS225-GF				
140	175										
160	200										
180	225										
200	250						ZS250-SF, ZS250-GF		ZS400-GF		
240	300	ZE400-NF					ZS400-NF				
280	350										
320	400										
400	500	ZS630-CF						ZS630-NF			
480	600/630										
560	700	ZS800-CF						ZS800-NF			
640	800										

400V AC circuit

Rated breaking capacity (kA) 415V AC I_{cu} (sym)		1.5	2.5	7.5	10	25	30	36	40	50	65	70	100
Max. operational current (A)	Rated current of circuit breaker(A)												
12	15	PZE30-NF	PZS30-NF	PZS50-NF		ZS50-SF							
16	20												
24	30												
32	40	PZE50-NF											
40	50												
48	60	PZE60-NF		PZS60-NF									
60	75	PZE125-NF				ZS125-SF							
80	100												
100	125						ZS125-GF						
120	150	ZE250-SF					ZS250-SF			ZS225-GF			
140	175												
160	200												
180	225												
200	250									ZS250-GF			
240	300	ZE400-NF					ZS400-NF				ZS400-GF		
280	350												
320	400												
400	500	ZS630-CF							ZS630-NF				
480	600/630												
560	700	ZS800-CF							ZS800-NF				
640	800												

12 Selection of motor protection breakers (for direct start)

For protection of 200/220V AC 3-phase induction motors

Rated capacity of motor (kW)	Rated current of motor protection breaker(A)	Motor protection breaker type Rated breaking capacity (sym.) 240V AC 2.5kA	5 kA	25kA	50kA	65kA	85kA	125kA
0.2	1.4	**E30-NM**	**S30-NM**					
0.4	2.6							
0.75	4							
1.5	8							
2.2	10		**S50-NM**					
3.7	16			**PS125-NM** (Comming soon)				
5.5	24							
7.5	32							
11	45	**E50-NM**						
15	60	**E100-NM**						
18.5	75							
22	90							
30	125	**S250-SM**						
37	150							
45	175							
55	225							

For protection of 400/440V AC 3-phase induction motors

Rated capacity of motor (kW)	Rated current of motor protection breaker(A)	Motor protection breaker type Rated breaking capacity (sym.) 415V AC 2.5kA	7.5kA	10kA	30kA	36kA	40kA	85kA
0.2	0.7	**S30-NM**						
0.4	1.4							
0.75	2.0							
1.5	4							
2.2	5							
3.7	8							
5.5	12		**S50-NM**					
7.5	16							
11	24							
15	32							
18.5	40	**E50-NM**						
22	45							
30	60	**E100-NM**						
37	75							
45	90							
55	100							
75	150	**S250-SM**						
90	175							
110	225							

Note (1) : A motor protection breaker with a hydraulic-magnetic overcurrent trip mechanism cannot be used in an inverter circuit.
Remark 1. Applies to direct on line starting. Please consider the starting conditions. When applying to Y- △ circuits, refer to "Selection of breakers for protection of motor branch circuits" on page 3-10.

Starting conditions

Frame	Motor protection breaker type	Start time (600%)	Inrush current (percentage of total load current)
30A	**E30-NM** **S30-NM**	2 sec max.	960% max.
50A	**E50-NM** **S50-NM**	2 sec max.	960% max.
100A	**E100-NM**	2 sec max.	960% max.
225A	**S250-SM**	4 sec max.	1040% max.

Warning

If the starting current (600% of the total motor load current), starting time, or inrush current exceeds the starting conditions shown in the table, the circuit breaker may trip. In particular, note that in the case of a high-efficiency motor, the starting current and inrush current are generally larger than for a general-purpose motor, and the motor protection breaker may not be applicable.

13 Selection of earth leakage circuit breakers for motor protection (for direct start)

For protection of 200/220V AC 3-phase induction motors

Rated capacity of motor (kW)	Circuit breaker rated current (A)	Circuit breaker type — Rated breaking capacity (sym.) 240V AC: 2.5kA	5 kA	10kA	25kA	50kA	85kA
0.2	1.4	ZE30-NM	ZS30-NM	ZS50-CM			
0.4	2.6						
0.75	4						
1.5	8						
2.2	10						
3.7	16				ZS100-SM		
5.5	24						
7.5	32						
11	45	ZE50-NM					
15	60	ZE100-NM					
18.5	75						
22	90						
30	125	ZS250-SM					
37	150						
45	175						
55	225						

For protection of 400/440V AC 3-phase induction motors

Rated capacity of motor (kW)	Circuit breaker rated current (A)	Circuit breaker type — Rated breaking capacity (sym.) 415V AC: 2.5kA	7.5kA	10kA	15kA	30kA	40kA
0.2	0.7	ZS30-NM	ZS50-CM				
0.4	1.4						
0.75	2.0						
1.5	4						
2.2	5						
3.7	8						
5.5	12						
7.5	16		ZS100-SM				
11	24						
15	32						
18.5	40						
22	45	ZE50-NM					
30	60	ZE100-NM					
37	75						
45	90						
55	100						
75	150	ZS250-SM					
90	175						
110	225						

Note (1) : An earth leakage circuit breaker for motor protection with a hydraulic-magnetic overcurrent trip mechanism cannot be used in an inverter circuit.
Remark 1. Applies to direct on line starting. Please consider the starting conditions. When applying to Y- △ starting circuits, refer to "Selection of earth leakage circuit breakers for motor branch circuits" on page 3-12.

Starting conditions

Frame	Circuit breaker type	Start time (600%)	Inrush current (percentage of total load current)
30 A	ZE30-NM	2 sec max.	960% max.
	ZS30-NM		
50 A	ZE50-NM	2 sec max.	960% max.
	ZS50-CM		
100 A	ZE100-NM	2 sec max.	960% max.
225 A	ZS250-SM	6 sec max.	1040% max.

Frame	Circuit breaker type	Rated current	Start time (600%)	Inrush current
100 A	ZS100-SM	16～32 A	2 sec max.	360 A
		40～45 A	6 sec max.	480 A
		60 A	4 sec max.	720 A
		75 A	4 sec max.	900 A
		90 A	4 sec max.	1080 A
		100 A	4 sec max.	1200 A

Warning

If the starting current (600% of the total motor load current), starting time, or inrush current exceeds the starting conditions shown in the table, the earth leakage circuit breaker may trip.
In particular, note that in the case of a high-efficiency motor, the starting current and inrush current are generally larger than for a general-purpose motor, and the earth leakage circuit breaker for motor protection may not be applicable.

14 Selection of circuit breakers for transformer primary side

The circuit breaker for transformer primary side is selected that has an instantaneous trip pickup current value slightly larger than the excitation inrush current value so that it will not malfunction due to the excitation inrush current of the transformer. The magnitude of the excitation inrush current is based on Table 1.

Transformer capacity (kVA)	Single-phase 210V Type / breaking capacity (kA)		Rated current (A)	Single-phase 420V Type / breaking capacity (kA)		Rated current (A)	3-phase 210V Type / breaking capacity (kA)		Rated current (A)	3-phase 420V Type / breaking capacity (kA)		Rated current (A)
5	**PS125-NFH**	/50	50	**PS125-NFH**	/36	30	**PS125-NFH**	/50	30	**PS125-NFH**	/36	15
7.5	**PS125-NFH**	/50	75	**PS125-NFH**	/36	40	**PS125-NFH**	/50	40	**PS125-NFH**	/36	20
10	**PS125-NFH**	/50	100	**PS125-NFH**	/36	50	**PS125-NFH**	/50	50	**PS125-NFH**	/36	30
15	**E250-SFH**	/35	150	**PS125-NFH**	/36	75	**PS125-NFH**	/50	75	**PS125-NFH**	/36	40
	S250-SFH	/85	150									
20	**S250-SFH**	/85	200	**PS125-NFH**	/36	100	**PS125-NFH**	/50	125	**PS125-NFH**	/36	50
30	**PS400-NEH**	/85	175 (I_{CT}=400A)	**E250-SFH**	/25	150	**E250-SFH**	/35	150	**PS125-NFH**	/36	60
				S250-SFH	/40	150	**S250-SF**	/85	225			
							S250-SFH	/85	150			
50	**S630-NEH**	/85	300	**PS400-NEH**	/50	175 (I_{CT}=400A)	**PS400-NEH**	/85	200 (I_{CT}=400A)	**PS125-NFH**	/36	125
							E250-SFH	/35	225			
							S250-SFH	/85	225			
75	**S1250-NEH**	/100	500	**PS400-NEH**	/50	200 (I_{CT}=400A)	**PS400-NEH**	/85	250 (I_{CT}=400A)	**E250-SFH**	/25	150
										E250-SF	/25	200
										S250-SF	/40	200
										S250-SFH	/40	150
100	**S1250-NEH**	/100	600	**S630-NEH**	/50	300	**PS400-NEH**	/85	350 (I_{CT}=400A)	**E250-SFH**	/25	175
										S250-SFH	/40	175
150	**S1600-NEH**	/125	800	**S630-NEH**	/50	400	**S630-NEH**	/85	500	**PS400-NEH**	/50	225 (I_{CT}=400A)
200	**XS2000NE**	/125	1000	**S1250-NEH**	/70	500	**S800-NEH**	/85	700	**PS400-NEH**	/50	350 (I_{CT}=400A)
300	**XS2000NE**	/125	1600	**S1250-NEH**	/70	800	**S1250-NEH**	/100	1000	**S630-NEH**	/50	500

Note: Do not use a circuit breaker for transformer primary side as a switch. The switching durability will be greatly reduced due to the excitation inrush current. Please install a separate switch.

Table 1

Transformer capacity (kVA)	Single-phase transformer First wave peak value (multiple)	Attenuation time constant (cycle)	3-phase transformer First wave peak value (multiple)	Attenuation time constant (cycle)
5～10	34	3～6	32	3～6
15～20	33	3～6	30	3～6
30	32	4～7	26	3～6
50	30	4～7	24	4～7
75	25	6～10	20	4～7
100	24	6～10	18	6～10
150	21	6～10	16	6～10
200	19	7～12	14	6～10
300	16	9～14	12	6～10

Remarks :
1. The above value is larger than the actual excitation inrush current because the current limiting due to the impedance of the electric circuit is not considered.
2. The multiple indicates the first wave peak value of the excitation inrush current with respect to the rated current peak value.

3 Selection

Moulded Case Circuit Breakers

15 Selection of circuit breakers for resistance welding machine circuits

Welding machine		Single-phase 200V			Single-phase 400V		
		Circuit breaker with instantaneous trip only			Circuit breaker with instantaneous trip only		
Rated capacity (kVA)	Standard max. input example (kVA)	Circuit breaker type	Rated current (A)	Instantaneous trip pickup current (A)	Circuit breaker type	Rated current (A)	Instantaneous trip pickup current (A)
12.5	40	**PS50-NF**	50I	600±120	**PS50-NF**	50I	600±120
		S125-SF	125I	600±120	**S125-SF**	125I	600±120
25	79	**PE125-NF**	125I	1500±300	**PE125-NF**	60I	750±150
		S125-SF	125I	1000±200	**S125-SF**	125I	600±120
50	158	**E250-SF**	250I	1950±390	**PE125-NF**	125I	1500±300
		S250-SF	250I	1950±390	**S125-SF**	125I	1000±200
75	237	**E400-NF**	400I	3000±600	**E250-SF**	250I	1625±325
		PS400-CF	400I	3000±600	**S250-SF**	250I	1625±325
100	316	**E400-NF**	400I	4000±800	**E250-SF**	250I	1950±390
		PS400-CF	400I	4000±800	**S250-SF**	250I	1950±390

Remarks :
1. The welding machine is for the case of the synchronous closing method.
2. Select the applicable circuit breaker type according to the required rated breaking capacity.

3 Selection

Moulded Case Circuit Breakers

16 Selection of circuit breakers for capacitor circuits

Capacitor capacity	Circuit breaker rated current (A)							
	200 V 50Hz		400 V 50Hz		220 V 60Hz		440 V 60Hz	
(kvar)	Single-phase	3-phase	Single-phase	3-phase	Single-phase	3-phase	Single-phase	3-phase
5	40	30	20	15	40	20	20	15
10	100	50	40	30	75	40	40	20
15	100	75	60	40	100	60	50	30
20	150	100	100	50	150	100	75	40
25	200	100	100	60	175	100	100	50
30	225	125	100	75	200	125	100	60
40	300	175	150	100	300	175	150	100
50	400	225	200	100	350	200	175	100
75	600	350	300	175	500	300	250	150
100	800	400	400	225	700	400	350	200
150	1000	600	600	350	1000	600	500	300
200	1400	800	800	400	1200	800	700	400
300	2500	1400	1000	600	2000	1200	1000	600
400	3000	1800	1400	800	2800	1600	1200	800

Remark : The rated current of the circuit breaker is selected to be approximately 150% of the rated current of the capacitor.

3 Selection

Moulded Case Circuit Breakers

17 Selection of circuit breakers for inverter circuits

The circuit breaker is for overload/short-circuit protection of the wiring on the primary side of the inverter. Select the rated current (I_n) of the circuit breaker with respect to the inverter input current (I_i) including harmonic components as follows in consideration of the effects of temperature rise, etc. due to harmonic components.

$$I_n \geq 1.4 \times I_i$$

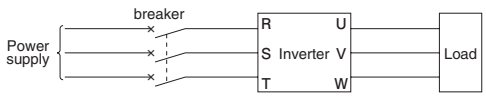

Inverter circuit

Note 1: The circuit breaker is for commercial frequencies of 50 and 60 Hz. It cannot be installed on the secondary side of the inverter.
Note 2: A circuit breaker with a hydraulic-magnetic overcurrent trip mechanism cannot be used in an inverter circuit due to the problem of temperature rise.

18 Selection of circuit breakers and earth leakage circuit breakers for selectivity coordination

The following table shows possible combinations of main circuit breakers and branch circuit breakers capable of selectivity coordination with the main circuit breakers as well as the breaking capacity I_{cu} sym. (kA) of each combination at the points where the branch circuit breaker is installed.

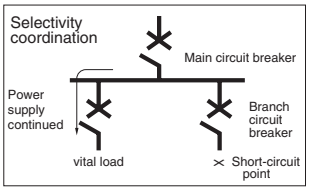

Breaker combination table for selectivity coordination for 240V AC circuit

	Main circuit breaker		PS250-NE	PS400-NE	PS400-GE	PH400-CE	H400-NE	L400-NE	S630-NE	S630-NEH	PS630-NE	PS630-GE	PH630-CE
	Rated current I_r		250A	400A	400A	400A	400A	400A	630A	630A	630A	630A	630A
	Rated breaking capacity I_{cu} sym. (kA) / Branch circuit breaker		50	85	100	125	150	200	85	85	85	100	125
MCCB	PS30-NF, PE50-NF, PE60-NF	7.5	2.5	7.5	7.5	7.5	7.5	7.5	7.5	7.5	7.5	7.5	7.5
MCCB	PS50-NF	15	2.5	10	10	10	10	10	15	15	15	15	15
MCCB	PS60-NF, PE125-NF	30	2.5	10	10	10	10	10	30	30	30	30	30
MCCB	S50-SF, S125-SF	50	30	25	25	25	6	6	36	50	36	36	36
MCCB	PS125-NF	50	30	36	36	36	6	6	36	50	36	36	36
MCCB	S100-GF, S125-GF	85	—	6	6	6	6	6	42	65	36	36	36
MCCB	PS50-PF, PS125-PF	85	30	50	50	50	6	6	36	65	50	70	70
MCCB	H100-NF, H125-NF	150	—	25	25	25	6	6	65	85	65	65	65
MCCB	E250-SF	35	—	5	5	5	5	5	35	35	35	35	35
MCCB	PS250-NE	50	—	5	5	5	5	5	36	50	36	36	36
MCCB	S250-SF	85	—	5	5	5	5	5	36	65	36	36	36
MCCB	PS250-PF, PS250-PE	85	—	5	5	5	5	5	36	65	50	70	70
MCCB	H225-NF, H250-NF	150	—	5	5	5	5	5	65	85	65	65	65
MCCB	E400-NF	35	—	—	—	—	—	—	—	—	—	—	—
MCCB	PS400-CF	50	—	—	—	—	—	—	—	—	—	—	—
MCCB	PS400-NF, PS400-NE	85	—	—	—	—	—	—	—	—	—	—	—
MCCB	PS400-GF, PS400-GE	100	—	—	—	—	—	—	—	—	—	—	—
MCCB	PH400-CF, PH400-CE	125	—	—	—	—	—	—	—	—	—	—	—
MCCB	H400-NE	150	—	—	—	—	—	—	—	—	—	—	—
MCCB	S630-CF	50	—	—	—	—	—	—	—	—	—	—	—
MCCB	PS630-CF	50	—	—	—	—	—	—	—	—	—	—	—
MCCB	S630-NF, S630-NE	85	—	—	—	—	—	—	—	—	—	—	—
MCCB	PS630-NF, PS630-NE	85	—	—	—	—	—	—	—	—	—	—	—
MCCB	PS630-GF, PS630-GE	100	—	—	—	—	—	—	—	—	—	—	—
MCCB	PH630-CF, PH630-CE	125	—	—	—	—	—	—	—	—	—	—	—
MCCB	S800-CF	50	—	—	—	—	—	—	—	—	—	—	—
MCCB	S800-NF, S800-NE	85	—	—	—	—	—	—	—	—	—	—	—
ELCB	PZS30-NF, PZE50-NF, PZE60-NF	7.5	2.5	7.5	7.5	7.5	7.5	7.5	7.5	7.5	7.5	7.5	7.5
ELCB	PZS50-NF	15	2.5	10	10	10	10	10	15	15	15	15	15
ELCB	PZS60-NF, PZE125-NF	30	2.5	10	10	10	10	10	30	30	30	30	30
ELCB	ZS50-SF, ZS125-SF	50	—	6	6	6	6	6	36	50	36	36	36
ELCB	ZS100-GF, ZS125-GF	85	—	6	6	6	6	6	36	65	36	36	36
ELCB	ZE250-SF	35	—	5	5	5	5	5	35	35	35	35	35
ELCB	ZS250-SF	85	—	5	5	5	5	5	36	65	36	36	36
ELCB	ZS225-GF, ZS250-GF	85	—	5	5	5	5	5	36	65	36	36	36
ELCB	ZE400-NF	35	—	—	—	—	—	—	—	—	—	—	—
ELCB	ZS400-NF	85	—	—	—	—	—	—	—	—	—	—	—
ELCB	ZS400-GF	100	—	—	—	—	—	—	—	—	—	—	—
ELCB	ZS630-CF	50	—	—	—	—	—	—	—	—	—	—	—
ELCB	ZS630-NF	85	—	—	—	—	—	—	—	—	—	—	—
ELCB	ZS800-CF	50	—	—	—	—	—	—	—	—	—	—	—
ELCB	ZS800-NF	85	—	—	—	—	—	—	—	—	—	—	—

	Main circuit breaker		S800-NE	S800-NEH	S1000-CE	S1250-NE	S1250-NEH	S1250-GE	S1600-NE	S1600-NEH	XS2000NE	XS2000NE HIGH INST	XS2500NE	XS2500NE HIGH INST	XS3200NE
	Rated current I_r		800A	800A	1000A	1250A	1250A	1250A	1600A	1600A	2000A	2000A	2500A	2500A	3200A
	Rated breaking capacity I_{cu} sym. (kA) / Branch circuit breaker		85	85	100	100	100	125	125	125	125	125	125	125	125
MCCB	PS30-NF, PE50-NF, PE60-NF	7.5	7.5	7.5	7.5	7.5	7.5	7.5	7.5	7.5	7.5	7.5	7.5	7.5	7.5
MCCB	PS50-NF	15	15	15	15	15	15	15	15	15	15	15	15	15	15
MCCB	PS60-NF, PE125-NF	30	30	30	30	30	30	30	30	30	30	30	30	30	30
MCCB	S50-SF, S125-SF	50	50	50	50	50	50	50	50	50	50	50	50	50	50
MCCB	PS125-NF	50	50	50	50	50	50	50	50	50	50	50	50	50	50
MCCB	S100-GF, S125-GF	85	65	65	85	85	85	85	85	85	85	85	85	85	85
MCCB	PS50-PF, PS125-PF	85	50	65	85	85	85	85	85	85	85	85	85	85	85
MCCB	H100-NF, H125-NF	150	85	85	85	100	100	125	125	125	125	125	125	125	125
MCCB	E250-SF	35	35	35	35	35	35	35	35	35	35	35	35	35	35
MCCB	PS250-NE	50	50	50	50	50	50	50	50	50	50	50	50	50	50
MCCB	S250-SF	85	50	65	65	85	85	85	85	85	85	85	85	85	85
MCCB	PS250-PF, PS250-PE	85	50	65	65	85	85	85	85	85	85	85	85	85	85
MCCB	H225-NF, H250-NF	150	85	85	85	100	100	125	125	125	125	125	125	125	125
MCCB	E400-NF	35	30	35	35	35	35	35	35	35	35	35	35	35	35
MCCB	PS400-CF	50	30	36	36	50	50	50	50	50	50	50	50	50	50
MCCB	PS400-NF, PS400-NE	85	30	36	36	50	65	50	65	85	85	85	85	85	85
MCCB	PS400-GF, PS400-GE	100	30	36	36	50	65	50	65	85	85	100	100	100	100
MCCB	PH400-CF, PH400-CE	125	30	36	36	50	65	50	65	85	85	125	125	125	125
MCCB	H400-NE	150	50	65	65	85	85	85	85	100	100	125	125	125	125
MCCB	S630-CF	50	—	—	—	36	36	36	36	36	36	50	36	50	50
MCCB	PS630-CF	50	—	—	—	36	36	36	36	36	36	50	36	50	50
MCCB	S630-NF, S630-NE	85	—	—	—	36	36	36	36	36	36	50	36	50	50
MCCB	PS630-NF, PS630-NE	85	—	—	—	36	36	36	36	36	36	50	36	50	50
MCCB	PS630-GF, PS630-GE	100	—	—	—	36	36	36	36	36	36	50	36	50	50
MCCB	PH630-CF, PH630-CE	125	—	—	—	36	36	36	36	36	36	50	36	50	50
MCCB	S800-CF	50	—	—	—	—	—	—	25	30	30	50	36	50	50
MCCB	S800-NF, S800-NE	85	—	—	—	—	—	—	25	30	30	50	36	50	50
ELCB	PZS30-NF, PZE50-NF, PZE60-NF	7.5	7.5	7.5	7.5	7.5	7.5	7.5	7.5	7.5	7.5	7.5	7.5	7.5	7.5
ELCB	PZS50-NF	15	15	15	15	15	15	15	15	15	15	15	15	15	15
ELCB	PZS60-NF, PZE125-NF	30	30	30	30	30	30	30	30	30	30	30	30	30	30
ELCB	ZS50-SF, ZS125-SF	50	50	50	50	50	50	50	50	50	50	50	50	50	50
ELCB	ZS100-GF, ZS125-GF	85	65	65	85	85	85	85	85	85	85	85	85	85	85
ELCB	ZE250-SF	35	35	35	35	35	35	35	35	35	35	35	35	35	35
ELCB	ZS250-SF	85	50	65	65	85	85	85	85	85	85	85	85	85	85
ELCB	ZS225-GF, ZS250-GF	85	50	65	65	85	85	85	85	85	85	85	85	85	85
ELCB	ZE400-NF	35	30	35	35	35	35	35	35	35	35	35	35	35	35
ELCB	ZS400-NF	85	30	36	36	50	65	50	65	85	85	85	85	85	85
ELCB	ZS400-GF	100	30	36	36	50	65	50	65	85	85	100	100	100	100
ELCB	ZS630-CF	50	—	—	—	36	36	36	36	36	36	50	36	50	50
ELCB	ZS630-NF	85	—	—	—	36	36	36	36	36	36	50	36	50	50
ELCB	ZS800-CF	50	—	—	—	—	—	—	25	30	30	50	36	50	50
ELCB	ZS800-NF	85	—	—	—	—	—	—	25	30	30	50	36	50	50

Note) It is assumed that the set current and set time of the main circuit breaker for long time trip, short time trip, and instantaneous trip are all set to the maximum.

Breaker combination table for selectivity coordination for 415V AC circuit

Main circuit breaker			PS125-NE	PS250-NE	PS400-NE	PS400-GE	PH400-CE	H400-NE	L400-NE	S630-NE	S630-NEH	PS630-NE	PS630-GE	PH630-CE
Rated current I_r			125A	250A	400A	400A	400A	400A	400A	630A	630A	630A	630A	630A
Rated breaking capacity I_{cu} sym. (kA) / Branch circuit breaker			36	36	50	70	110	125	200	50	50	50	70	110
MCCB	PS30-NF, PE50-NF, PE60-NF	2.5	1.5	2.5	2.5	2.5	2.5	2.5	2.5	2.5	2.5	2.5	2.5	2.5
MCCB	PS50-NF	7.5	1.5	2.5	7.5	7.5	7.5	7.5	7.5	7.5	7.5	7.5	7.5	7.5
MCCB	PS60-NF, PE125-NF	10	—	2.5	7.5	7.5	7.5	7.5	7.5	10	10	10	10	10
MCCB	S50-SF, S125-SF	30	—	30	25	25	25	6	6	30	30	30	30	30
MCCB	PS125-NF, PS125-NE	36	—	30	36	36	36	6	6	30	36	36	36	36
MCCB	S100-GF, S125-GF	65	—	—	6	6	6	6	6	42	50	30	30	30
MCCB	PS50-PF, PS125-PF, PS125-PE	70	—	30	50	50	50	6	6	30	50	50	70	70
MCCB	H100-NF, H125-NF	125	—	—	25	25	25	6	6	50	50	25	25	25
MCCB	E250-SF	25	—	—	5	5	5	5	5	25	25	25	25	25
MCCB	PS250-NE	36	—	—	10	10	10	5	5	25	36	36	36	36
MCCB	S250-SF	40	—	—	5	5	5	5	5	25	40	25	25	25
MCCB	PS250-PF, PS250-PE	70	—	—	10	10	10	5	5	25	50	50	70	70
MCCB	H225-NF, H250-NF	125	—	—	5	5	5	5	5	50	50	25	25	25
MCCB	E400-NF	25	—	—	—	—	—	—	—	—	—	—	—	—
MCCB	PS400-CF	36	—	—	—	—	—	—	—	—	—	—	—	—
MCCB	PS400-NF, PS400-NE	50	—	—	—	—	—	—	—	—	—	—	—	—
MCCB	PS400-GF, PS400-GE	70	—	—	—	—	—	—	—	—	—	—	—	—
MCCB	PH400-CF, PH400-CE	110	—	—	—	—	—	—	—	—	—	—	—	—
MCCB	H400-NE	125	—	—	—	—	—	—	—	—	—	—	—	—
MCCB	S630-CF	36	—	—	—	—	—	—	—	—	—	—	—	—
MCCB	PS630-CF	36	—	—	—	—	—	—	—	—	—	—	—	—
MCCB	S630-NF, S630-NE	50	—	—	—	—	—	—	—	—	—	—	—	—
MCCB	PS630-NF, PS630-NE	50	—	—	—	—	—	—	—	—	—	—	—	—
MCCB	PS630-GF, PS630-GE	70	—	—	—	—	—	—	—	—	—	—	—	—
MCCB	PH630-CF, PH630-CE	110	—	—	—	—	—	—	—	—	—	—	—	—
MCCB	S800-CF	36	—	—	—	—	—	—	—	—	—	—	—	—
MCCB	S800-NF, S800-NE	50	—	—	—	—	—	—	—	—	—	—	—	—
ELCB	PZS30-NF, PZE50-NF, PZE60-NF	2.5	1.5	2.5	2.5	2.5	2.5	2.5	2.5	2.5	2.5	2.5	2.5	2.5
ELCB	PZS50-NF	7.5	1.5	2.5	7.5	7.5	7.5	7.5	7.5	7.5	7.5	7.5	7.5	7.5
ELCB	PZS60-NF, PZE125-NF	10	—	2.5	7.5	7.5	7.5	7.5	7.5	10	10	10	10	10
ELCB	ZS50-SF, ZS125-SF	30	—	—	6	6	6	6	6	30	30	30	30	30
ELCB	ZS100-GF, ZS125-GF	65	—	—	6	6	6	6	6	30	50	30	30	30
ELCB	ZE250-SF	25	—	—	5	5	5	5	5	25	25	25	25	25
ELCB	ZS250-SF	40	—	—	5	5	5	5	5	25	40	25	25	25
ELCB	ZS225-GF, ZS250-GF	65	—	—	5	5	5	5	5	25	50	25	25	25
ELCB	ZE400-NF	25	—	—	—	—	—	—	—	—	—	—	—	—
ELCB	ZS400-NF	50	—	—	—	—	—	—	—	—	—	—	—	—
ELCB	ZS400-GF	70	—	—	—	—	—	—	—	—	—	—	—	—
ELCB	ZS630-CF	36	—	—	—	—	—	—	—	—	—	—	—	—
ELCB	ZS630-NF	50	—	—	—	—	—	—	—	—	—	—	—	—
ELCB	ZS800-CF	36	—	—	—	—	—	—	—	—	—	—	—	—
ELCB	ZS800-NF	50	—	—	—	—	—	—	—	—	—	—	—	—

Main circuit breaker			S800-NE	S800-NEH	S1000-CE	S1250-NE	S1250-NEH	S1250-GE	S1600-NE	S1600-NEH	XS2000NE	XS2000NE HIGH INST	XS2500NE	XS2500NE HIGH INST	XS3200NE
Rated current I_r			800A	800A	1000A	1250A	1250A	1250A	1600A	1600A	2000A	2000A	2500A	2500A	3200A
Rated breaking capacity I_{cu} sym. (kA) / Branch circuit breaker			50	50	65	70	70	85	85	85	85	85	85	85	85
MCCB	PS30-NF, PE50-NF, PE60-NF	2.5	2.5	2.5	2.5	2.5	2.5	2.5	2.5	2.5	2.5	2.5	2.5	2.5	2.5
MCCB	PS50-NF	7.5	7.5	7.5	7.5	7.5	7.5	7.5	7.5	7.5	7.5	7.5	7.5	7.5	7.5
MCCB	PS60-NF, PE125-NF	10	10	10	10	10	10	10	10	10	10	10	10	10	10
MCCB	S50-SF, S125-SF	30	30	30	30	30	30	30	30	30	30	30	30	30	30
MCCB	PS125-NF, PS125-NE	36	30	36	36	36	36	36	36	36	36	36	36	36	36
MCCB	S100-GF, S125-GF	65	50	50	65	65	65	65	65	65	65	65	65	65	65
MCCB	PS50-PF, PS125-PF, PS125-PE	70	36	50	65	70	70	70	70	70	70	70	70	70	70
MCCB	H100-NF, H125-NF	125	50	50	65	65	65	85	85	85	85	85	85	85	85
MCCB	E250-SF	25	25	25	25	25	25	25	25	25	25	25	25	25	25
MCCB	PS250-NE	36	36	36	36	36	36	36	36	36	36	36	36	36	36
MCCB	S250-SF	40	36	40	40	40	40	40	40	40	40	40	40	40	40
MCCB	PS250-PF, PS250-PE	70	36	50	50	70	70	70	70	70	70	70	70	70	70
MCCB	H225-NF, H250-NF	125	50	50	65	65	65	85	85	85	85	85	85	85	85
MCCB	E400-NF	25	25	25	25	25	25	25	25	25	25	25	25	25	25
MCCB	PS400-CF	36	25	30	30	36	36	36	36	36	36	36	36	36	36
MCCB	PS400-NF, PS400-NE	50	25	30	30	36	36	36	50	50	50	50	50	50	50
MCCB	PS400-GF, PS400-GE	70	25	30	30	36	36	36	50	70	70	70	70	70	70
MCCB	PH400-CF, PH400-CE	110	25	30	30	36	36	36	50	85	85	85	85	85	85
MCCB	H400-NE	125	35	50	50	65	65	65	65	70	70	85	85	85	85
MCCB	S630-CF	36	—	—	—	30	30	30	30	30	30	36	30	36	36
MCCB	PS630-CF	36	—	—	—	30	30	30	30	30	30	36	30	36	36
MCCB	S630-NF, S630-NE	50	—	—	—	30	30	30	30	30	30	36	30	36	36
MCCB	PS630-NF, PS630-NE	50	—	—	—	30	30	30	30	30	30	36	30	36	36
MCCB	PS630-GF, PS630-GE	70	—	—	—	30	30	30	30	30	30	36	30	36	36
MCCB	PH630-CF, PH630-CE	110	—	—	—	30	30	30	30	30	30	36	30	36	36
MCCB	S800-CF	36	—	—	—	—	—	—	20	25	25	36	30	36	36
MCCB	S800-NF, S800-NE	50	—	—	—	—	—	—	20	25	25	36	30	36	36
ELCB	PZS30-NF, PZE50-NF, PZE60-NF	2.5	2.5	2.5	2.5	2.5	2.5	2.5	2.5	2.5	2.5	2.5	2.5	2.5	2.5
ELCB	PZS50-NF	7.5	7.5	7.5	7.5	7.5	7.5	7.5	7.5	7.5	7.5	7.5	7.5	7.5	7.5
ELCB	PZS60-NF, PZE125-NF	10	10	10	10	10	10	10	10	10	10	10	10	10	10
ELCB	ZS50-SF, ZS125-SF	30	30	30	30	30	30	30	30	30	30	30	30	30	30
ELCB	ZS100-GF, ZS125-GF	65	50	50	65	65	65	65	65	65	65	65	65	65	65
ELCB	ZE250-SF	25	25	25	25	25	25	25	25	25	25	25	25	25	25
ELCB	ZS250-SF	40	36	40	40	40	40	40	40	40	40	40	40	40	40
ELCB	ZS225-GF, ZS250-GF	65	36	50	50	65	65	65	65	65	65	65	65	65	65
ELCB	ZE400-NF	25	25	25	25	25	25	25	25	25	25	25	25	25	25
ELCB	ZS400-NF	50	25	30	30	36	50	36	50	50	50	50	50	50	50
ELCB	ZS400-GF	70	25	30	30	36	50	36	50	65	65	70	70	70	70
ELCB	ZS630-CF	36	—	—	—	30	30	30	30	30	30	36	30	36	36
ELCB	ZS630-NF	50	—	—	—	30	30	30	30	30	30	36	30	36	36
ELCB	ZS800-CF	36	—	—	—	—	—	—	20	25	25	36	30	36	36
ELCB	ZS800-NF	50	—	—	—	—	—	—	20	25	25	36	30	36	36

Note) It is assumed that the set current and set time of the main circuit breaker for long time trip, short time trip, and instantaneous trip are all set to the maximum.

19 Combination of breakers for cascade breaking

The following table shows possible combinations of backup and backed-up breakers (conforming to Appendix A, JIS C 8201-2-1) as well as the cascade breaking capacity I_{cu} sym.（kA）of each combination.

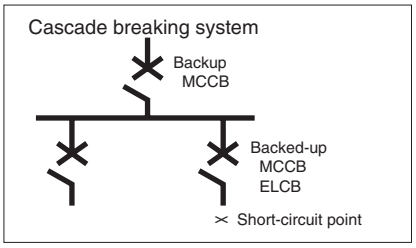

Breaker combination table for cascade breaking for 240V AC circuit

	Main circuit breaker		PE125-NF	S125-SF	PS125-NF	S100-GF S125-GF	PS125-PF	H100-NF H125-NF	L100-NF L125-NF	E250-SF	PS250-NE	S250-SF	PS250-PF PS250-PE	H225-NF H250-NF	L225-NF L250-NF
	Rated breaking capacity I_{cu} sym.（kA） / Branch circuit breaker		30	50	50	85	85	150	200	35	50	85	85	150	200
MCCB	PS30-NF, PE50-NF, PE60-NF	7.5	25	30	30	30	30	30	30	10	10	10	10	10	10
MCCB	PS50-NF	15	25	36	36	36	36	50	50	25	25	25	25	36	36
MCCB	PS60-NF, PE125-NF	30	—	50	50	50	50	70	70	—	50	50	50	50	50
MCCB	S50-SF, S125-SF	50	—	—	—	85	85	150	200	—	—	70	85	150	200
MCCB	PS125-NF	50	—	—	—	85	85	100	—	—	—	85	85	100	100
MCCB	S100-GF, S125-GF	85	—	—	—	—	—	150	200	—	—	—	—	150	200
MCCB	PS50-PF, PS125-PF	85	—	—	—	—	—	125	—	—	—	—	—	125	125
MCCB	H100-NF, H125-NF	150	—	—	—	—	—	—	200	—	—	—	—	—	200
MCCB	E250-SF	35	—	—	—	—	—	—	—	—	50	70	85	50	85
MCCB	PS250-NE	50	—	—	—	—	—	—	—	—	—	85	85	100	100
MCCB	S250-SF	85	—	—	—	—	—	—	—	—	—	—	—	100	150
MCCB	PS250-PF, PS250-PE	85	—	—	—	—	—	—	—	—	—	—	—	125	125
MCCB	H225-NF, H250-NF	150	—	—	—	—	—	—	—	—	—	—	—	—	200
MCCB	E400-NF	35	—	—	—	—	—	—	—	—	—	—	—	—	—
MCCB	PS400-CF	50	—	—	—	—	—	—	—	—	—	—	—	—	—
MCCB	PS400-NF, PS400-NE	85	—	—	—	—	—	—	—	—	—	—	—	—	—
MCCB	PS400-GF, PS400-GE	100	—	—	—	—	—	—	—	—	—	—	—	—	—
MCCB	PH400-CF, PH400-CE	125	—	—	—	—	—	—	—	—	—	—	—	—	—
MCCB	H400-NE	150	—	—	—	—	—	—	—	—	—	—	—	—	—
ELCB	PZS30-NF, PZE50-NF, PZE60-NF	7.5	25	30	30	30	30	30	30	10	10	10	10	10	10
ELCB	PZS50-NF	15	25	36	36	36	36	50	50	25	25	25	25	36	36
ELCB	PZS60-NF, PZE125-NF	30	—	50	50	50	50	70	70	35	36	36	36	50	50
ELCB	ZS50-SF, ZS125-SF	50	—	—	—	85	85	150	200	—	—	70	85	150	200
ELCB	ZS100-GF, ZS125-GF	85	—	—	—	—	—	150	200	—	—	—	—	150	200
ELCB	ZE250-SF	35	—	—	—	—	—	—	—	—	50	70	85	50	85
ELCB	ZS250-SF	85	—	—	—	—	—	—	—	—	—	—	—	100	150
ELCB	ZS225-GF, ZS250-GF	85	—	—	—	—	—	—	—	—	—	—	—	150	200
ELCB	ZE400-NF	35	—	—	—	—	—	—	—	—	—	—	—	—	—
ELCB	ZS400-NF	85	—	—	—	—	—	—	—	—	—	—	—	—	—
ELCB	ZS400-GF	100	—	—	—	—	—	—	—	—	—	—	—	—	—

	Main circuit breaker		PS400-CF	PS400-NF PS400-NE	PS400-GF PS400-GE	PH400-CF PH400-CE	H400-NE	L400-NE	S630-CF	PS630-CF	S630-NF S630-NE	PS630-NF PS630-NE	PS630-GF PS630-GE	PH630-CF PH630-CE	S800-CF	S800-NF S800-NE	S1250-NE	S1250-GE
	Rated breaking capacity I_{cu} sym.（kA） / Branch circuit breaker		50	85	100	125	150	200	50	50	85	85	100	125	50	85	100	125
MCCB	PS30-NF, PE50-NF, PE60-NF	7.5	—	—	—	—	—	—	—	—	—	—	—	—	—	—	—	—
MCCB	PS50-NF	15	—	—	—	—	—	—	—	—	—	—	—	—	—	—	—	—
MCCB	PS60-NF, PE125-NF	30	—	—	—	—	—	—	—	—	—	—	—	—	—	—	—	—
MCCB	S50-SF, S125-SF	50	—	70	70	70	85	85	—	—	—	—	—	—	—	—	—	—
MCCB	PS125-NF	50	—	70	70	70	85	85	—	—	—	—	—	—	—	—	—	—
MCCB	S100-GF, S125-GF	85	—	—	100	125	150	200	—	—	—	—	—	—	—	—	—	—
MCCB	PS50-PF, PS125-PF	85	—	—	100	125	150	200	—	—	—	—	100	100	—	—	—	—
MCCB	H100-NF, H125-NF	150	—	—	—	—	—	200	—	—	—	—	—	—	—	—	—	—
MCCB	E250-SF	35	50	70	85	85	50	85	50	50	50	70	85	85	50	50	—	—
MCCB	PS250-NE	50	—	70	70	70	85	85	—	—	85	85	85	85	—	85	—	—
MCCB	S250-SF	85	—	—	100	100	100	150	—	—	—	—	100	100	—	—	—	—
MCCB	PS250-PF, PS250-PE	85	—	—	100	100	125	125	—	—	—	—	100	100	—	—	—	—
MCCB	H225-NF, H250-NF	150	—	—	—	—	—	200	—	—	—	—	—	—	—	—	—	—
MCCB	E400-NF	35	50	70	70	70	85	85	50	50	50	50	50	50	50	50	50	50
MCCB	PS400-CF	50	—	85	100	100	100	100	—	—	70	70	85	85	—	70	70	70
MCCB	PS400-NF, PS400-NE	85	—	—	100	125	125	125	—	—	—	—	100	125	—	—	100	100
MCCB	PS400-GF, PS400-GE	100	—	—	—	125	150	150	—	—	—	—	—	125	—	—	—	125
MCCB	PH400-CF, PH400-CE	125	—	—	—	—	150	200	—	—	—	—	—	—	—	—	—	—
MCCB	H400-NE	150	—	—	—	—	—	200	—	—	—	—	—	—	—	—	—	—
ELCB	PZS30-NF, PZE50-NF, PZE60-NF	7.5	—	—	—	—	—	—	—	—	—	—	—	—	—	—	—	—
ELCB	PZS50-NF	15	—	—	—	—	—	—	—	—	—	—	—	—	—	—	—	—
ELCB	PZS60-NF, PZE125-NF	30	—	—	—	—	—	—	—	—	—	—	—	—	—	—	—	—
ELCB	ZS50-SF, ZS125-SF	50	—	70	70	70	85	85	—	—	—	—	—	—	—	—	—	—
ELCB	ZS100-GF, ZS125-GF	85	—	—	100	125	150	200	—	—	—	—	—	—	—	—	—	—
ELCB	ZE250-SF	35	50	70	85	85	50	85	50	50	50	70	85	85	50	50	—	—
ELCB	ZS250-SF	85	—	—	100	100	100	150	—	—	—	—	100	100	—	—	—	—
ELCB	ZS225-GF, ZS250-GF	85	—	—	100	125	150	200	—	—	—	—	—	—	—	—	—	—
ELCB	ZE400-NF	35	50	70	70	70	85	85	50	50	50	50	50	50	50	50	50	50
ELCB	ZS400-NF	85	—	—	100	125	150	200	—	—	—	—	100	100	—	—	100	100
ELCB	ZS400-GF	100	—	—	—	125	150	200	—	—	—	—	—	125	—	—	—	125

Breaker combination table for cascade breaking for 415V AC circuit

Main circuit breaker			PE125-NF	S125-SF	PS125-NF PS125-NE	S100-GF S125-GF	PS125-PF PS125-PE	H100-NF H125-NF	L100-NF L125-NF	E250-SF	PS250-NE	S250-SF	PS250-PF PS250-PE	H225-NF H250-NF	L225-NF L250-NF
Rated breaking capacity I_{cu} sym. (kA) / Branch circuit breaker			10	30	36	65	70	125	200	25	36	40	70	125	200
MCCB	PS30-NF, PE50-NF, PE60-NF	2.5	10	10	10	10	10	10	10	5	5	5	5	10	10
MCCB	PS50-NF	7.5	10	15	15	25	25	36	36	15	15	10	15	36	36
MCCB	PS60-NF, PE125-NF	10	—	25	25	25	25	50	50	15	15	15	15	50	50
MCCB	S50-SF, S125-SF	30	—	—	36	65	70	80	180	—	36	35	70	80	180
MCCB	PS125-NF, PS125-NE	36	—	—	—	50	50	85	—	—	—	40	50	70	70
MCCB	S100-GF, S125-GF	65	—	—	—	—	70	80	180	—	—	—	70	80	180
MCCB	PS50-PF, PS125-PF, PS125-PE	70	—	—	—	—	—	110	—	—	—	—	—	110	110
MCCB	H100-NF, H125-NF	125	—	—	—	—	—	—	180	—	—	—	—	—	200
MCCB	E250-SF	25	—	—	—	—	—	—	—	—	36	40	70	50	85
MCCB	PS250-NE	36	—	—	—	—	—	—	—	—	—	40	50	70	130
MCCB	S250-SF	40	—	—	—	—	—	—	—	—	—	—	70	80	130
MCCB	PS250-PF, PS250-PE	70	—	—	—	—	—	—	—	—	—	—	—	110	130
MCCB	H225-NF, H250-NF	125	—	—	—	—	—	—	—	—	—	—	—	—	200
MCCB	E400-NF	25	—	—	—	—	—	—	—	—	—	—	—	—	—
MCCB	PS400-CF	36	—	—	—	—	—	—	—	—	—	—	—	—	—
MCCB	PS400-NF, PS400-NE	50	—	—	—	—	—	—	—	—	—	—	—	—	—
MCCB	PS400-GF, PS400-GE	70	—	—	—	—	—	—	—	—	—	—	—	—	—
MCCB	PH400-CF, PH400-CE	110	—	—	—	—	—	—	—	—	—	—	—	—	—
MCCB	H400-NE	125	—	—	—	—	—	—	—	—	—	—	—	—	—
ELCB	PZS30-NF, PZE50-NF, PZE60-NF	2.5	10	10	10	10	10	10	10	5	5	5	5	10	10
ELCB	PZS50-NF	7.5	10	15	15	25	25	36	36	10	15	10	15	36	36
ELCB	PZS60-NF, PZE125-NF	10	—	25	25	25	25	50	50	15	15	15	15	50	50
ELCB	ZS50-SF, ZS125-SF	30	—	—	36	65	70	80	180	—	36	35	70	80	180
ELCB	ZS100-GF, ZS125-GF	65	—	—	—	—	70	80	180	—	—	—	70	80	180
ELCB	ZE250-SF	25	—	—	—	—	—	—	—	—	36	40	70	50	85
ELCB	ZS250-SF	40	—	—	—	—	—	—	—	—	—	—	70	80	130
ELCB	ZS225-GF, ZS250-GF	65	—	—	—	—	—	—	—	—	—	—	70	80	200
ELCB	ZE400-NF	25	—	—	—	—	—	—	—	—	—	—	—	—	—
ELCB	ZS400-NF	50	—	—	—	—	—	—	—	—	—	—	—	—	—
ELCB	ZS400-GF	70	—	—	—	—	—	—	—	—	—	—	—	—	—

Main circuit breaker			PS400-CF	PS400-NF PS400-NE	PS400-GF PS400-GE	PH400-CF PH400-CE	H400-NE	L400-NE	S630-CF	PS630-CF	S630-NF S630-NE	PS630-NF PS630-NE	PS630-GF PS630-GE	PH630-CF PH630-CE	S800-CF	S800-NF S800-NE	S1250-NE	S1250-GE
Rated breaking capacity I_{cu} sym. (kA) / Branch circuit breaker			36	50	70	110	125	200	36	36	50	50	70	110	36	50	70	85
MCCB	PS30-NF, PE50-NF, PE60-NF	2.5	—	—	—	—	—	—	—	—	—	—	—	—	—	—	—	—
MCCB	PS50-NF	7.5	—	—	—	—	—	—	—	—	—	—	—	—	—	—	—	—
MCCB	PS60-NF, PE125-NF	10	—	—	—	—	—	—	—	—	—	—	—	—	—	—	—	—
MCCB	S50-SF, S125-SF	30	36	50	50	50	70	70	—	—	—	—	—	—	—	—	—	—
MCCB	PS125-NF, PS125-NE	36	—	50	50	50	70	70	—	—	—	—	—	—	—	—	—	—
MCCB	S100-GF, S125-GF	65	—	—	70	70	70	85	—	—	—	—	—	—	—	—	—	—
MCCB	PS50-PF, PS125-PF, PS125-PE	70	—	—	—	85	85	110	—	—	—	—	—	85	—	—	—	—
MCCB	H100-NF, H125-NF	125	—	—	—	—	—	200	—	—	—	—	—	—	—	—	—	—
MCCB	E250-SF	25	36	50	70	70	50	70	36	36	40	50	70	70	36	40	—	—
MCCB	PS250-NE	36	—	50	50	50	70	70	—	—	50	50	50	50	—	50	—	—
MCCB	S250-SF	40	—	50	70	70	70	130	—	—	50	50	70	70	—	50	—	—
MCCB	PS250-PF, PS250-PE	70	—	—	—	85	110	110	—	—	—	—	—	85	—	—	—	—
MCCB	H225-NF, H250-NF	125	—	—	—	—	—	200	—	—	—	—	—	—	—	—	—	—
MCCB	E400-NF	25	36	36	36	36	50	50	30	36	36	36	36	36	30	36	30	30
MCCB	PS400-CF	36	—	50	50	50	50	50	—	—	50	50	50	50	—	50	50	50
MCCB	PS400-NF, PS400-NE	50	—	—	70	70	70	70	—	—	—	—	70	70	—	—	70	70
MCCB	PS400-GF, PS400-GE	70	—	—	—	110	110	110	—	—	—	—	—	110	—	—	—	85
MCCB	PH400-CF, PH400-CE	110	—	—	—	—	125	150	—	—	—	—	—	—	—	—	—	—
MCCB	H400-NE	125	—	—	—	—	—	200	—	—	—	—	—	—	—	—	—	—
ELCB	PZS30-NF, PZE50-NF, PZE60-NF	2.5	—	—	—	—	—	—	—	—	—	—	—	—	—	—	—	—
ELCB	PZS50-NF	7.5	—	—	—	—	—	—	—	—	—	—	—	—	—	—	—	—
ELCB	PZS60-NF, PZE125-NF	10	—	—	—	—	—	—	—	—	—	—	—	—	—	—	—	—
ELCB	ZS50-SF, ZS125-SF	30	36	50	50	50	70	70	—	—	—	—	—	—	—	—	—	—
ELCB	ZS100-GF, ZS125-GF	65	—	—	70	70	70	70	—	—	—	—	—	—	—	—	—	—
ELCB	ZE250-SF	25	36	50	70	70	50	70	36	36	40	50	70	70	36	40	—	—
ELCB	ZS250-SF	40	—	50	70	70	70	130	—	—	50	50	70	70	—	50	—	—
ELCB	ZS225-GF, ZS250-GF	65	—	—	70	85	85	130	—	—	—	—	70	70	—	—	—	—
ELCB	ZE400-NF	25	36	36	36	36	50	50	30	36	36	36	36	36	30	36	30	30
ELCB	ZS400-NF	50	—	—	70	70	120	130	—	—	—	—	70	70	—	—	65	65
ELCB	ZS400-GF	70	—	—	—	110	120	200	—	—	—	—	—	110	—	—	—	85

19 Combination of breakers for cascade breaking

The following table shows possible combinations of backup and backed-up breakers (conforming to Appendix A, IEC 60947-2) as well as the cascade breaking capacity (kA sym.) of each combination.

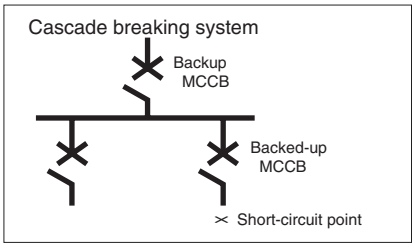

Breaker combination table for cascade breaking for 450V AC circuit (approved by NK, LR, AB)

Backup breaker / Rated breaking capacity / Backed-up breaker	sym.(kA)	PS50-NF	PS60-NF	PE125-NF	E250-SF	PS125-NF PS125-NFL PS125-NFH	PS125-NE	S125-SF	PS250-NE PS250-NEH	S250-SF	PS400-CF	PS630-CF	S630-CF	S800-CF	PS400-NF	PS400-NE PS400-NEH	PS630-NF	S100-GF S100-GFL S100-GFH S125-GF	PS50-PF PS50-PFL PS50-PFH PS125-PF PS125-PFL PS125-PFH
		7.5	10	10	15	25	25	25	25	30	30	30	30	30	45	45	45	50	50
PS30-NF	2.5	7.5 [13.4]	10 [21.3]	10 [21.3]	5 [7.74]	10 [21.3]	10 [21.3]	10 [21.3]	5 [7.74]	5 [7.74]									
PE50-NF	2.5	7.5 [13.4]	10 [21.3]	10 [21.3]	5 [7.74]	10 [21.3]	10 [21.3]	10 [21.3]	5 [7.74]	5 [7.74]									
PS50-NF	7.5		10 [21.3]	10 [21.3]	15 [32.6]	15 [32.6]	15 [32.6]	15 [32.6]										15 [32.6]	15 [32.6]
PS60-NF	10				15 [32.6]	22 [50.7]	22 [50.7]	22 [50.7]	15 [32.6]	15 [32.6]								22 [50.7]	22 [50.7]
PE125-NF	10				15 [32.6]	22 [50.7]	22 [50.7]	22 [50.7]	15 [32.6]	15 [32.6]								22 [50.7]	22 [50.7]
E250-SF	15								25 [56.2]	25 [56.2]	30 [70.8]	30 [70.8]	30 [70.8]	30 [70.8]	30 [70.8]	30 [70.8]	30 [70.8]		
S50-SF S125-SF	25										30 [70.8]	30 [70.8]	30 [70.8]	30 [70.8]	30 [70.8]	30 [70.8]	30 [70.8]	42 [96.7]	42 [96.7]
PS125-NF PS125-NFL PS125-NFH	25										30 [70.8]	30 [70.8]	30 [70.8]	30 [70.8]	30 [70.8]	30 [70.8]	30 [70.8]	42 [96.7]	42 [96.7]
PS125-NE	25										30 [70.8]	30 [70.8]	30 [70.8]	30 [70.8]	30 [70.8]	30 [70.8]	30 [70.8]	42 [96.7]	42 [96.7]
PS250-NE PS250-NEH	25										30 [70.8]	30 [70.8]	30 [70.8]	30 [70.8]	42 [96.7]	42 [96.7]	42 [96.7]		
S250-SF	30														42 [96.7]	42 [96.7]	42 [96.7]		
PS400-CF	30														45 [109]	45 [109]	45 [109]		
PS630-CF	30																45 [109]		
S630-CF	30																45 [109]		
S800-CF	30																		
S100-GF S100-GFL S100-GFH S125-GF	50																		
PS50-PF PS50-PFL PS50-PFH PS125-PF PS125-PFL PS125-PFH	50																		
PS125-PE	50																		
PS250-PF PS250-PFL PS250-PFH	50																		
PS250-PE PS250-PEH	50																		
S630-NF	50																		
S630-NE S630-NEH	50																		
S800-NF	50																		
S800-NE S800-NEH	50																		
H100-NF H125-NF	120																		
H225-NF	120																		
H400-NE	120																		

Notes: ① Values enclosed in square brackets "[ ]" represent the making current.

PS125-PE	PS250-PF PS250-PFL PS250-PFH	PS250-PE PS250-PEH	S630-NF	S630-NE S630-NEH	S800-NF	S800-NE S800-NEH	PS400-GF	PS400-GE PS400-GEH	PH400-CF	PH400-CE	H100-NF H125-NF	H225-NF	H400-NE	H630-NE	H800-NE	L100-NF L125-NF	L225-NF	L400-NE	L630-NE	L800-NE
50	50	50	50	50	50	50	65	65	100	100	120	120	120	125	125	180	180	180	180	180
15 [32.6]																				
22 [50.7]	15 [32.6]	15 [32.6]																		
22 [50.7]	15 [32.6]	15 [32.6]																		
	30 [70.8]	30 [70.8]	30 [70.8]	30 [70.8]	30 [70.8]	30 [70.8]	30 [70.8]	30 [70.8]	30 [70.8]	30 [70.8]		50 [121]	50 [121]	30 [65.2]	30 [65.2]		70 [165]	70 [165]	30 [70.8]	30 [70.8]
42 [96.7]	42 [96.7]	42 [96.7]	30 [70.8]	30 [70.8]	30 [70.8]	30 [70.8]	30 [70.8]	30 [70.8]	30 [70.8]	30 [70.8]	50 [121]	50 [121]	50 [121]	30 [70.8]	30 [70.8]	180 [430]	70 [165]	70 [165]	30 [70.8]	30 [70.8]
42 [96.7]	42 [96.7]	42 [96.7]	30 [70.8]	30 [70.8]	30 [70.8]	30 [70.8]	30 [70.8]	30 [70.8]	30 [70.8]	30 [70.8]	50 [112]					180 [430]				
42 [96.7]	42 [96.7]	42 [96.7]	30 [70.8]	30 [70.8]	30 [70.8]	30 [70.8]	30 [70.8]	30 [70.8]	30 [70.8]	30 [70.8]	50 [112]					180 [430]				
	42 [96.7]	42 [96.7]	42 [96.7]	42 [96.7]	42 [96.7]	42 [96.7]	42 [96.7]	42 [96.7]	42 [96.7]	42 [96.7]		70 [165]					130 [311]			
	42 [96.7]	42 [96.7]	42 [96.7]	42 [96.7]	42 [96.7]	42 [96.7]	42 [96.7]	42 [96.7]	42 [96.7]	42 [96.7]		70 [165]	70 [165]	70 [165]	70 [165]		130 [311]	130 [311]	85 [203]	85 [203]
			50 [112]	50 [112]	50 [112]	50 [112]	50 [112]	50 [112]	50 [112]	50 [112]										
			50 [112]	50 [112]	50 [112]	50 [112]														
			50 [117]	50 [117]	50 [117]	50 [117]								100 [230]	100 [230]				130 [311]	130 [311]
					50 [117]	50 [117]									100 [230]					130 [311]
											70 [165]	70 [165]	70 [165]			180 [430]	85 [203]	85 [203]		
											70 [165]					180 [430]				
											70 [165]					180 [430]				
												70 [165]					130 [311]			
												70 [165]					130 [311]			
														100 [230]	100 [230]				130 [311]	130 [311]
														100 [230]	100 [230]				130 [311]	130 [311]
															100 [230]					130 [311]
															100 [230]					130 [311]
																180 [430]				
																	130 [311]			
																		180 [396]	180 [396]	180 [396]

19 Combination of breakers for cascade breaking

Breaker combination table for cascade breaking for 240V AC circuit (approved by NK, LR, AB)

Backup breaker / Rated breaking capacity / Backed-up breaker	sym.(kA)	PS50-NF	PS60-NF	PE125-NF	S125-SF	PS125-NF PS125-NFL PS125-NFH	PS125-NE	S250-SF	PS250-NE PS250-NEH	PS250-PF PS250-PFL PS250-PFH	PS250-PE PS250-PEH
		15	30	30	50	50	50	85	50	85	85
TB-5P	5②	15 [33.7]	25 [55.0]	25 [55.0]	25 [55.6]	25 [55.0]	25 [55.0]				
TB-5D	5②	15 [33.7]	25 [55.0]	25 [55.0]	25 [55.6]	25 [55.0]	25 [55.0]				
PS30-NF	7.5	15 [31.0]	25 [56.9]	25 [56.9]		30 [61.9]	30 [61.9]				
PE50-NF	7.5	15 [31.0]	25 [56.9]	25 [56.9]		30 [61.9]	30 [61.9]				
PS50-NF	15		25 [56.9]	25 [56.9]		30 [61.9]	30 [61.9]	25 [56.9]	25 [56.9]	25 [56.9]	25 [56.9]
PS60-NF	30				50 [115]	50 [115]	50 [115]	50 [115]	50 [115]	50 [115]	50 [115]
PE125-NF	30				50 [115]	50 [115]	50 [115]	50 [115]	50 [115]	50 [115]	50 [115]

Notes:
① Values enclosed in square brackets "[ ]" represent the making current.
② If the rated current is 10A, the rated breaking capacity is 2.5 kA.

20 Selection of rated operational voltage and number of poles

Select according to the circuit voltage and the distribution system. The circuit voltage in the table below shows the standard value, but even if it is a special voltage, if the voltage including the voltage fluctuation of the circuit is within the operable voltage fluctuation range shown on the right, earth leakage operation will occur.

Rated operational voltage and operable voltage fluctuation range

Rated operational voltage (AC)	operable voltage fluctuation range
For 100V	80 – 121V
100 to 100 / 200V common	80 – 242V
For 100 / 200V	80 – 242V
100 to 200V common	80 – 242V
100 to 240V common	80 – 264V
100 to 440V common	80 – 484V
200 to 440V common	160 – 484V

Distribution system	1ø2W・100V or 200V circuit	1ø3W・100 200V circuit
Connection example	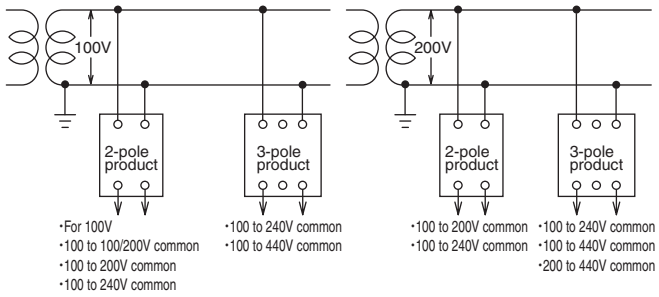	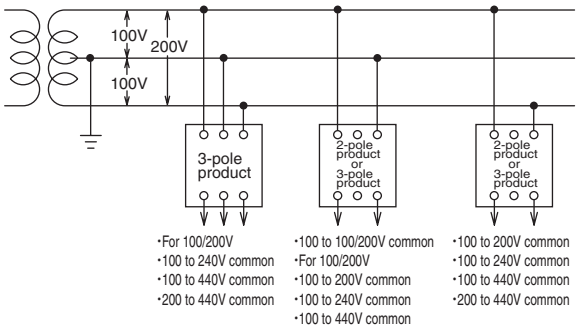

Distribution system	3ø3W・200V circuit	3ø3W・415V circuit
Connection example	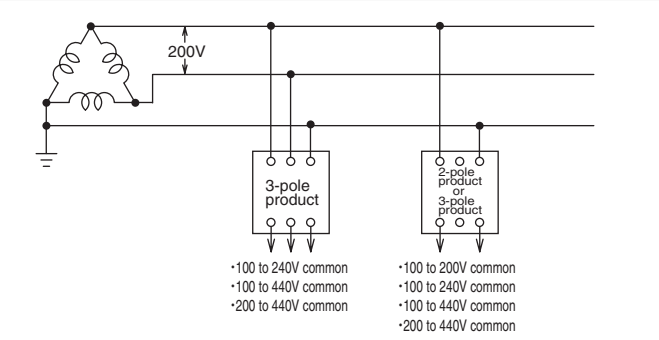	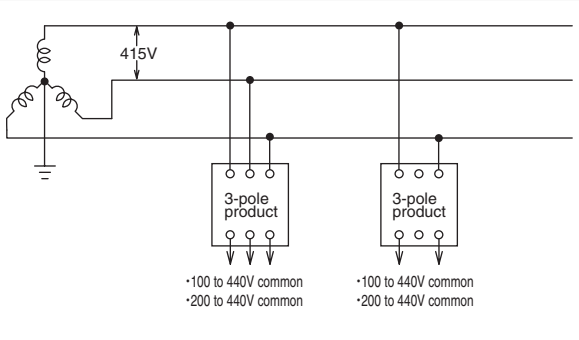

Distribution system	3ø4W・415V circuit
Connection example	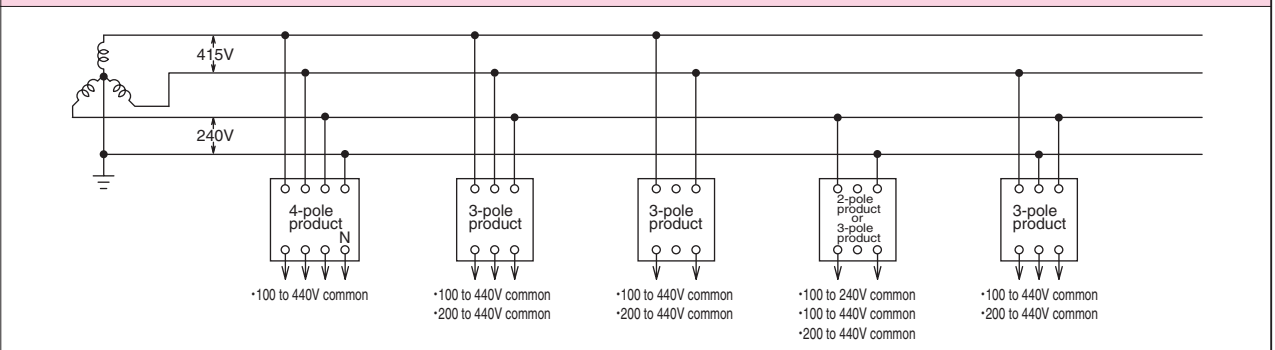

〈Notes on selection connection〉

(1) When using a 3-pole product as a 2-pole product, be sure to use the left and right poles. If you connect other than the left and right poles, earth leakage operation will not occur.

(2) For the main trunk of a 1ø3W 100/200V circuit, use a 3-pole product of a single phase 3-wire earth leakage circuit breakers with neutral phase open protection with a rated operational voltage of 100/200V, and connect the neutral pole to the central pole.

(3) For the main trunk of a 3ø4W 415V circuit, use a 4-pole product with a rated operational voltage of 440V, and connect the neutral pole to the N pole on the right side.

21 Selection of single phase 3-wire circuit breakers with neutral phase open protection

Single phase 3-wire circuit breakers with neutral phase open protection, single phase 3-wire earth leakage circuit breakers with neutral phase open protection, and single phase 3-wire circuit breakers with neutral phase open protection and earth leakage alarm protect load devices from single phase 3-wire neutral wire open phase accidents.
When the neutral wire of a single phase 3-wire circuit is open phase, the voltage that is normally balanced between the load devices becomes unbalanced. For example, in the example on the right, a voltage of 167V is applied to a 40W device and a voltage of 33V is applied to a 200W device. This may shorten the service life of the load device or cause a malfunction.
In order to prevent this, single phase 3-wire circuit breakers with neutral phase open protection, single phase 3-wire earth leakage circuit breakers with neutral phase open protection, and single phase 3-wire circuit breakers with neutral phase open protection and earth leakage alarm detect the abnormal voltage, securely break the electric circuit, and at the same time, protect against overload and short circuit.

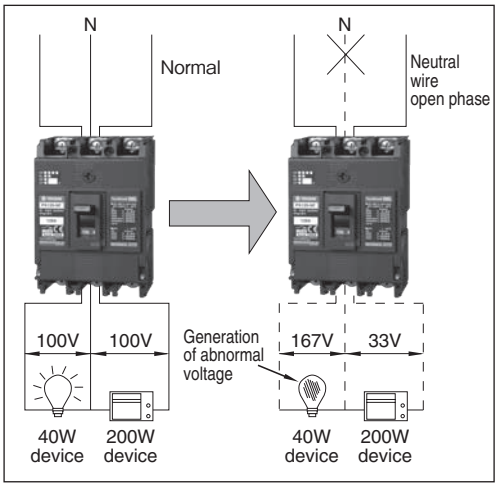

Precautions for selection connection

(1) : A circuit breaker dedicated to single-phase 3-wire 100/200V circuits.
(2) : Connect the neutral wire to the central pole and the voltage line (200V) to the left and right poles.
(3) : Be sure to connect the overvoltage detection lead wire to the load side (OFF side) of the circuit breaker. If it is connected to the line side (ON side), voltage will be applied to the OFF side even when the circuit breaker is turned off.
(4) : Connect the overvoltage detection lead wire to the end of the neutral wire on the load side (OFF side) of the circuit. It will not operate unless it is connected.
(5) : The overvoltage test button of single phase 3-wire circuit breakers with neutral phase open protection and single phase 3-wire circuit breakers with neutral phase open protection and earth leakage alarm checks the overvoltage operation.

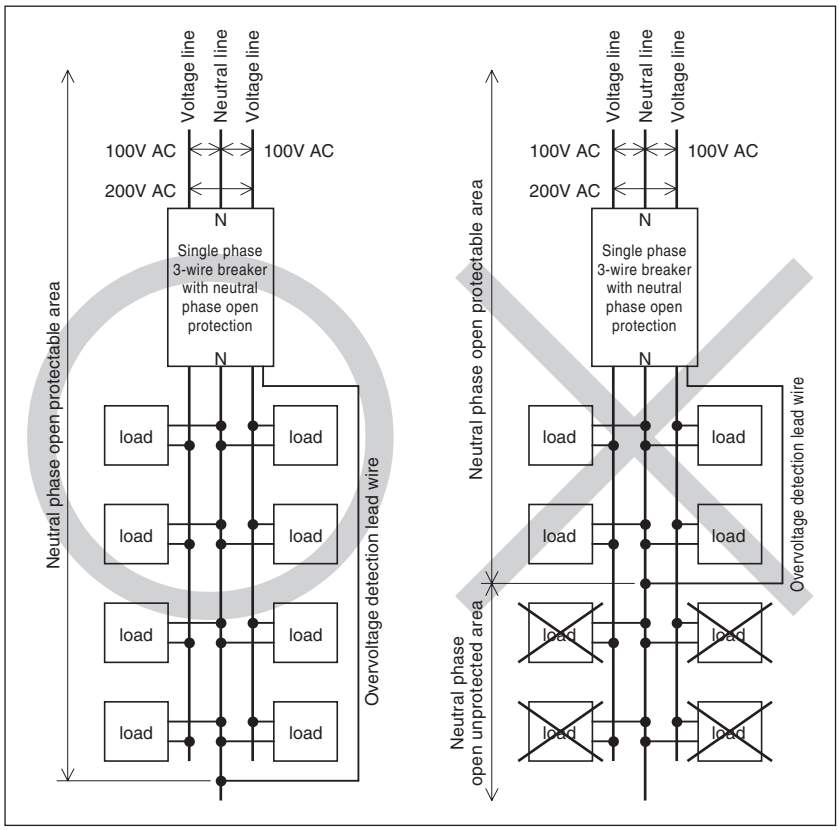

(6) : The test button of single phase 3-wire earth leakage circuit breakers with neutral phase open protection checks the overvoltage and earth leakage operation.

22 Application of single phase 3-wire circuit breakers/earth leakage circuit breakers with neutral phase open protection to parallel circuits

When installing multiple parallel circuits under the single phase 3-wire circuit breakers / earth leakage circuit breakers with neutral phase open protection, it is possible to increase the number of detection circuits by inserting a diode in parallel with the overvoltage detection lead wire as shown below.

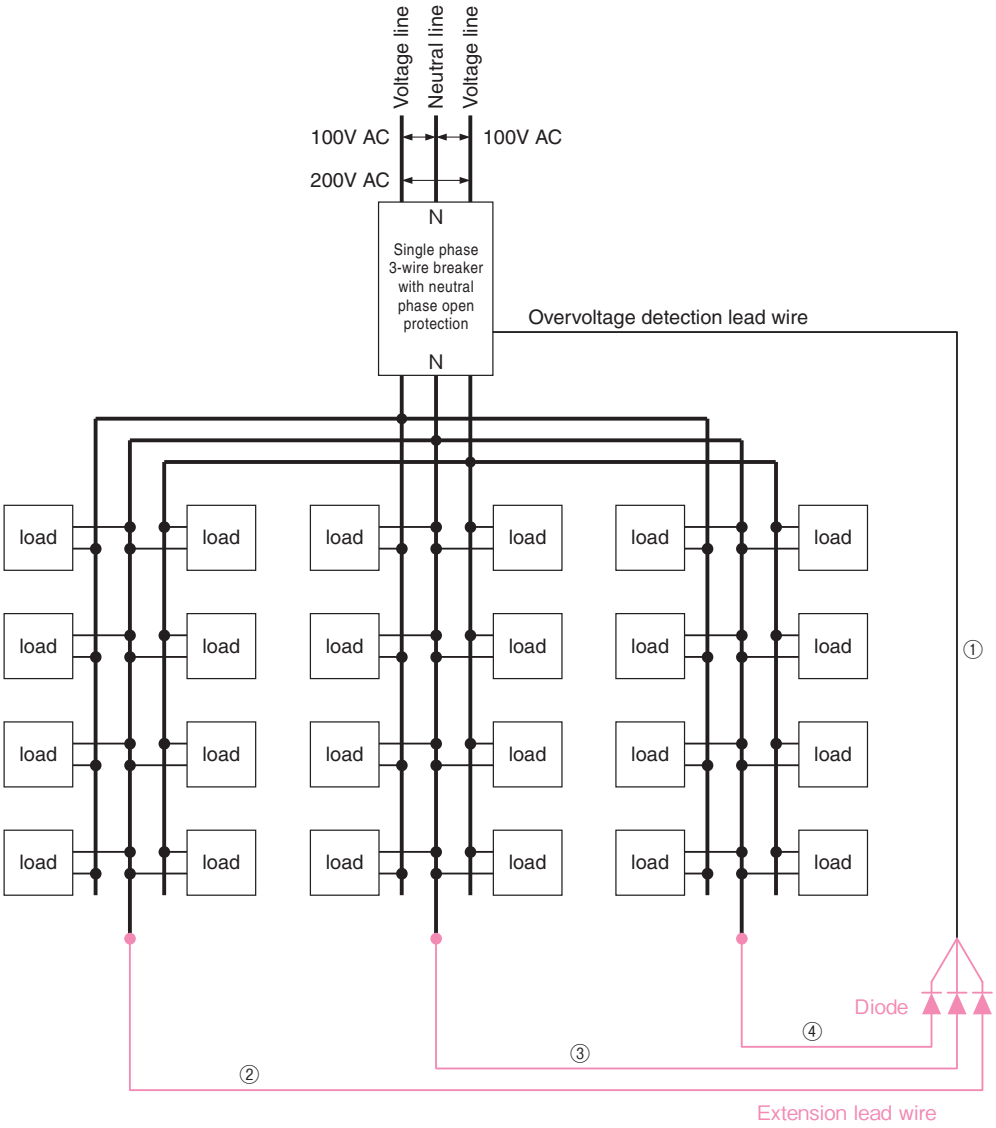

■ Diode specifications

Choose a general silicon rectifying diode with a reverse voltage of 1000V or more and an average forward current of 1A or more.

■ Warning

The wire thickness of the extension lead wire should be the same as the overvoltage detection lead wire.

The total wiring distance (①+②+③+④) between the overvoltage detection lead wire and the extension lead wire should be 30m or less.

System configuration

Connecting the electricity of a photovoltaic power generation system to the electricity of an electric power company and using both sources of electricity is called grid interconnection. The power generated from the solar cells installed on the roof is converted from DC to AC by the power conditioner, connected to the load side of the photovoltaic power generation side circuit breaker in the distribution board, and supplied to the load from the distribution board together with the power from the electric power company.

Selection of circuit breaker

The power from the power conditioner is reversely connected to the load side of the photovoltaic power generation side circuit breaker by a single-phase 2-wire system (in the case of a general single-phase 2-wire interconnection). If there is an imbalance in the load, an overcurrent will occur in the neutral line at the receiving point. Therefore, a 3P3E circuit breaker with overcurrent protection elements at all poles is used as the main circuit breaker. In addition, to prevent overvoltage failure, a single phase 3-wire earth leakage circuit breakers with neutral phase open protection is used as the main circuit breaker.
If the main circuit breaker trips, the voltage will continue to be applied to the load side by the power of the power conditioner. With Terasaki single phase 3-wire breaker with neutral phase open protection, since the overvoltage and earth leakage detection circuits have a continuous rating specification, there is no need to turn off the power of the detection circuits using a Megger test switch, etc.
In the case of a relatively large photovoltaic power generation system such as on a commercial building, it is connected to the load side of the photovoltaic power generation side circuit breaker 3P3E by single-phase 3-wire (single-phase 3-wire interconnection).

Grid interconnection	Circuit breakers that can be used on the main trunk side	Circuit breakers that can be used on the photovoltaic
Single phase 2-wire interconnection	Single phase 3-wire earth leakage circuit breakers with neutral phase open protection 3P3E	Moulded case circuit breaker 3P2E Reverse connection performance
Single phase 3-wire interconnection	Single phase 3-wire earth leakage circuit breakers with neutral phase open protection 3P3E	Moulded case circuit breaker 3P3E Reverse connection performance

[**Single phase 2-wire interconnection**] Electricity is supplied from the solar cell through the power conditioner to the two 200V wires.

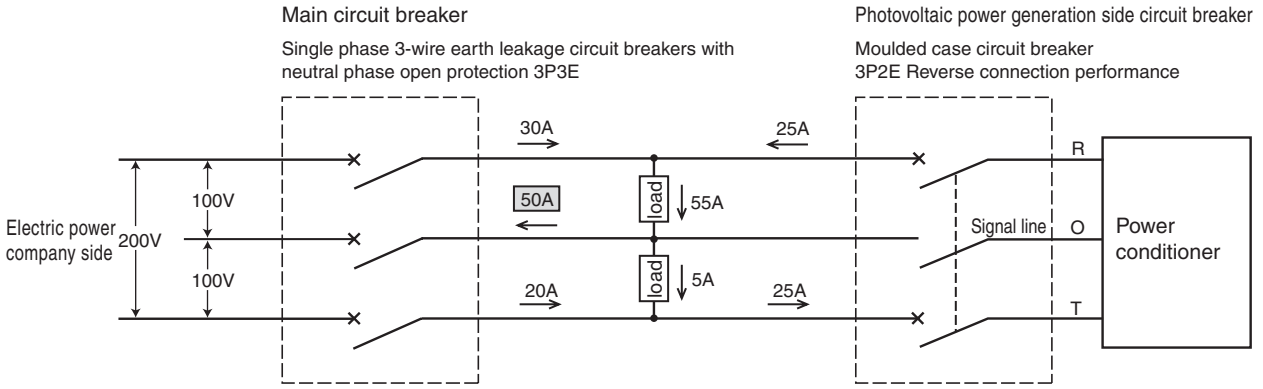

O:Connect a signal line to the central phase so that the solar cell does not supply electricity in stand-alone mode when the circuit breaker on the main trunk side opens (power failure).

[**Single phase 3-wire interconnection**] Electricity is supplied from the solar cell through the power conditioner to the three 100/200V wires.

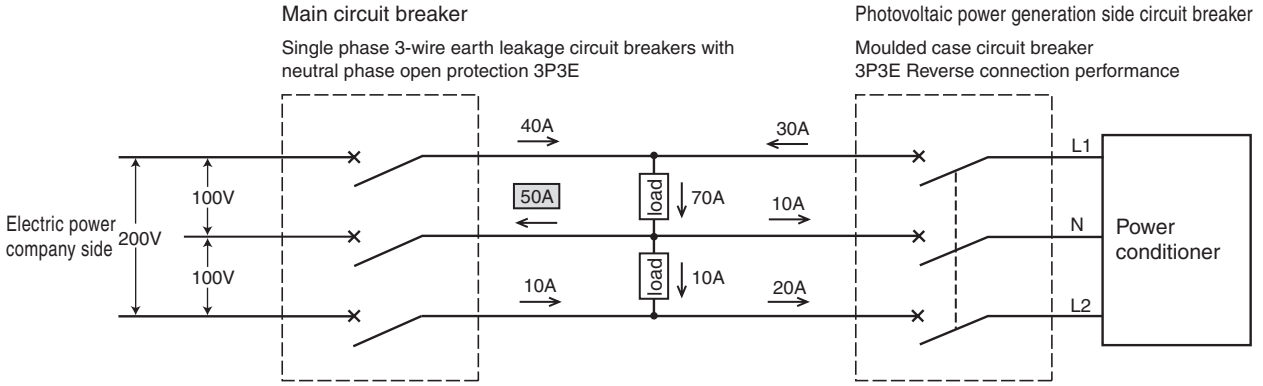

4 Special Breakers

1 Instantaneous trip only breakers ····· 4-2
2 Special instantaneous trip breakers ····· 4-4
3 Circuit Breaker For DC Special Voltage ····· 4-6
4 DC specification product instantaneous trip set current value ····· 4-7
5 Type 2 Heat Resistant Circuit Breaker for Emergency Power Supplies ····· 4-8
6 Thermal Adjustable Circuit Breaker for Overseas Plants ····· 4-9
7 690V AC Circuit Breaker ····· 4-10
8 Special Mounting Dimensions 400 A Frame Circuit Breaker ····· 4-12
9 High-Performance Electronic Smart Circuit Breaker (TPOU type OCR) ····· 4-14
10 High-Performance Electronic Circuit Breaker (XOW type OCR) ····· 4-23
11 Circuit Breaker for Special Environments ····· 4-29

4 Special Breakers

Moulded Case Circuit Breakers

1 Instantaneous trip only breakers

The instantaneous trip only breaker is a short circuit current protection-dedicated breaker that has only the magnetic tripping device with a thermal overload trip device excluded from the standard breaker. Other ratings and specifications and outline dimensions of these breakers are the same as those of standard breakers of the same types.

Category	New type	Rated current (A)	Code number	Instantaneous trip current (A)
Fixed instantaneous trip ①⑤	**PS50-NF** ③	20I	I50	500±100
		50I	I60	600±120
	PE125-NF ③	60I	I75	750±150
		75I	I100	1000±200
		125I	I150	1500±300
	H100-NF L100-NF S100-GF ④	15I	I18	180±36
		20I	I24	240±48
		30I	I36	360±72
		40I	I48	480±96
		50I	I60	600±120
		100I	I72	720±144
			I90	900±180
			I120	1200±240
	S125-GF ④	125I	I125	1250±250
	S125-SF ③	125I	I60	600±120
			I100	1000±200
			I160	1600±320
	H125-NF, L125-NF ④	125I	I150	1500±300
	H225-NF, L225-NF ④	225I	I162	1625±325
			I195	1950±390
			I227	2275±455
			I260	2600±520
			I292	2925±585
	E250-SF, S250-SF ④	250I	I162	1625±325
			I195	1950±390
			I227	2275±455
			I260	2600±520
			I292	2925±585
	E400-NF ④	400I	I250	2500±500
			I300	3000±600
			I350	3500±700
			I400	4000±800

Category	New type	Rated current (A)	Code number \ Dial position	10	9	8	7	6	5
Adjustable instantaneous trip ②⑤	**S630-CF S630-NF** ④	630I	V500	5000	4500	4000	3500	3000	2500
			V600	6000	5400	4800	4200	3600	3000
			V630	6300	5670	5040	4410	3780	3150
	S800-CF S800-NF S800-RF S800-PF ④	800I	V700	7000	6300	5600	4900	4200	3500
			V800	8000	7200	6400	5600	4800	4000

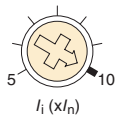

Selector dial

● The instantaneous trip current values shown in the table above are standard settings. Contact us if you require other settings.

Note:

① Setting tolerance: ±20% (Please specify the code number.)
② For AC, the dial position is set to 10 before delivery. Setting tolerance: ±20% (Please specify the code number.)
For DC, it is fixed at one point. The dial position is set to the instantaneous trip current value you request before delivery.
Setting tolerance: ±20% (Specify that the circuit breaker is for DC, the code number, and the instantaneous trip current value.)
③ See page 4-7 for the instantaneous trip current value when using with DC. Setting tolerance: ±20%
④ Please specify whether you require a circuit breaker for DC. Unless otherwise specified, circuit breakers are manufactured for AC.
⑤ The colour of the circuit breaker cover is Grey Blue.

Nameplate installed on the magnetic breakers only

Category	New type	Rated current (A)	Code number	Instantaneous trip current (A)
Fixed instantaneous trip ①④	**PS50-PF**	20I	I30	300±60
		30I	I45	450±90
		40I	I60	600±120
		50I	I75	750±150
	PS125-NF **PS125-PF**	20I	I30	300±60
		30I	I45	450±90
		40I	I60	600±120
		50I	I75	750±150
		60I	I90	900±180
		75I	I112	1125±225
		100I	I150	1500±300
		125I	I150	1500±300
	PS250-PF	250I	I162	1625±325
			I195	1950±390
			I227	2275±455
			I240	2400±480
			I247	2475±495
			I250	2500±500

Category	New type	Rated current (A)	Code number \ Dial position	12	11	10	9	8	7	6
Adjustable instantaneous trip ②④	**PS400-CF** **PS400-NF** **PS400-GF** **PH400-CF**	400I	V225	2700	2475	2250	2025	1800	1575	1350
			V250	3000	2750	2500	2250	2000	1750	1500
			V300	3600	3300	3000	2700	2400	2100	1800
			V350	4200	3850	3500	3150	2800	2450	2100
			V400	4800	4400	4000	3600	3200	2800	2400

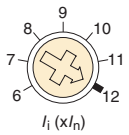

Selector dial

Category	New type	Rated current (A)	Code number \ Dial position	10	9	8	7	6	5
Adjustable instantaneous trip ③④	**PS630-CF** **PS630-NF** **PS630-GF** **PH630-CF**	500I(PM,DR,PG) 600I(FC,RC,FP) ⑤	V500	5000	4500	4000	3500	3000	2500
			V600	6000	5400	4800	4200	3600	3000

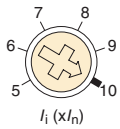

Selector dial

Note:

① Setting tolerance: ±20% (Please specify the code number.)
See page 4-7 for the instantaneous trip current value when using with DC.

② For AC, the dial position is set to 12 before delivery. Setting tolerance: ±20% (Please specify the code number.)
See page 4-7 for the instantaneous trip current value when using with DC. The dial position is set to 12 before delivery. Setting tolerance: ±20% (Specify that the circuit breaker is for DC and the code number.)

③ For AC, the dial position is set to 10 before delivery. Setting tolerance: ±20% (Please specify the code number.)
See page 4-7 for the instantaneous trip current value when using with DC. The dial position is set to 10 before delivery. Setting tolerance: ±20% (Specify that the circuit breaker is for DC and the code number.)

④ The colour of the circuit breaker cover is Grey Blue.

⑤ For FC (front-connected type), RC (rear-connected type), and FP (flush-mounted type), 600I is indicated and a rated current of up to 600 A can flow. For PM (plug-in type), DR (draw-out type), and PG (TemPlug70), 500I is indicated, and the rated current must be reduced to 500 A.

Nameplate installed on the magnetic breakers only

1. High Instantaneous Trip

High instantaneous trip breakers are the breakers having a high instantaneous trip pickup current.
Use these breakers in order to achieve selective coordination or to provide protection on the primary side of transformer.

Category	Type (Reference type ②)	Rated current (A)		Instantaneous trip current (A)
Thermal -Magnetic type	PS50-PFH(PS50-PF)	15		300
		20		400
		30		600
		40		800
		50		1000
	S100-GFH(S100-GF) PS125-NFH(PS125-NF) PS125-PFH(PS125-PF)	15		300
		20		400
		30		600
		40		800
		50		1000
		60		1200
		75		1500
		100		1800
	PS125-NFH(PS125-NF) PS125-PFH(PS125-PF)	125		1800
	E250-SFH(E250-SF) S250-SFH(S250-SF)	125		2250
		150		2700
		175		3150
		200		3600
		225		4050
	PS250-PFH(PS250-PF)	125		2250
		150		⑩
		175		⑩
		200		⑩
		225		⑩
		250		⑩
Electronic type	PS250-NEH(PS250-NE) PS250-PEH(PS250-PE)	Sensor rated current (A) : (I_n)	Rated current (A) : (I_r)	3000
		250	125	
			150	
			175	
			200	
			225	
			250	
	PS400-NEH(PS400-NE) PS400-GEH(PS400-GE) PH400-CEH(PH400-CE)	Sensor rated current (A) : (I_n)	Rated current (A) : (I_r)	6300
		400	175	
			200	
			225	
			250	
			300	
			350	
			400	
	S630-NEH(S630-NE)	CT rated current (A) : (I_{CT})	Rated current (A) : (I_r)	10000
		630	250	
			300	
			350	
			400	
			500	
			600	
			630	
	S800-NEH(S800-NE) S800-REH(S800-RE) S800-PEH(S800-PE)	CT rated current (A) : (I_{CT})	Rated current (A) : (I_r)	10000
		800	350	
			400	
			450	
			500	
			600	
			700	
			800	
	S1250-NEH(S1250-NE)	CT rated current (A) : (I_{CT})	Rated current (A) : (I_r)	15000
		1250	500	
			600	
			700	
			800	
			1000	
			1200	
			1250	
	S1600-NEH(S1600-NE)	CT rated current (A) : (I_{CT})	Rated current (A) : (I_r)	19200
		1600	700	
			800	
			900	
			1000	
			1200	
			1400	
			1500	
			1600	
	XS2000NE④	CT rated current (A) : (I_{CT})	Rated current (A) : (I_r)	35000
		2000	1000	
			1200	
			1400	
			1600	
			1800	
			2000	
	XS2500NE④	CT rated current (A) : (I_{CT})	Rated current (A) : (I_r)	35000
		2500	1200	
			1400	
			1600	
			2000	
			2500	

Note:
① Setting tolerance: ±20%
② The rating, specifications, and external dimensions are the same as the circuit breakers in this column. (The instantaneous trip pickup current value is different.)
③ A circuit breaker with an optional trip indicator are not available.
④ The colour of the circuit breaker cover is Grey Blue.
⑩ Please contact us for details.

HIGH INST
Nameplate of High-Inst breakers

2. Low Instantaneous Trip

Low instantaneous trip breakers are the breakers having a low instantaneous trip pickup current. Use these breakers in order to achieve selective coordination with a upstream high-voltage fuse.

Category	Type (Reference type ②)	Rated current (A)	Instantaneous trip current (A)
Thermal -Magnetic type ①③	**PS50-PFL(PS50-PF)**	15	90
		20	120
		30	180
		40	240
		50	300
	S100-GFL(S100-GF) **PS125-NFL(PS125-NF)** **PS125-PFL(PS125-PF)**	15	90
		20	120
		30	180
		40	240
		50	300
		60	360
		75	450
		100	600
	PS125-NFL(PS125-NF) **PS125-PFL(PS125-PF)**	125	750
	E250-SFL(E250-SF) **S250-SFL(S250-SF)** **PS250-PFL(PS250-PF)**	125	750
		150	900
		175	1050
		200	1200
		225	1350
		250	1500

Note:

① Setting tolerance: ±20%
② The rating, specifications, and external dimensions are the same as the circuit breakers in this column.
(The instantaneous trip pickup current value is different.)
③ The colour of the circuit breaker cover is Grey Blue.

Nameplate of Low-Inst breakers

3 Circuit Breaker For DC Special Voltage

Standard circuit breakers cannot be used in circuits above 250 V DC.
Please see Catalogue I73K for the specifications of the circuit breakers for 350 V DC to 1000 V DC.

	Voltage (DC) \ Frame size (A)	50	100 / 125		225 / 250		400	800	1000	1250	1600	2000	2500	3200
Moulded Case Circuit Breakers	1000V			PVS125-SDH 4P 5kA/5kA		PVS250-SDH 4P 5kA/5kA	PVS400-NDH 4P 10kA/5kA	PVS800-NDH 4P 10kA/5kA						
				PVS125-GDH 4P 10kA/5kA		PVS250-GDH 4P 10kA/5kA		PVS800-GDH 4P 15kA/15kA						
	750V		PVE125-SDL 3P 3kA/3kA	PVS125-SDL 3P 10kA/5kA		PVS250-SDL 3P 10kA/5kA	PVS400-NDL 3P 10kA/5kA	PVS800-NDL 3P 10kA/10kA						
							PVS400-NDL 4P 10kA/10kA	PVS800-NDL 4P 10kA/10kA						
	600V	S50-SD 3P 5kA/5kA	S125-SD 3P 5kA/5kA	S125-GD 3P 10kA/5kA	S250-SD 3P 5kA/5kA	S250-GD 3P 10kA/5kA	S400-ND 3P 15kA/15kA	S800-ND 3P 20kA/10kA	S1000-ND 3P 20kA/10kA	XS1250ND 3P 20kA/15kA	XS1600ND 3P 20kA/15kA	XS2000ND 3P 20kA/15kA	XS2500ND 3P 20kA/15kA	XS3200ND 3P 20kA/15kA
	500V	S50-SD 3P 7.5kA/7.5kA	S125-SD 3P 7.5kA/7.5kA	S125-GD 3P 15kA/7.5kA	S250-SD 3P 7.5kA/7.5kA	S250-GD 3P 15kA/7.5kA				XS1250ND 3P 50kA/25kA	XS1600ND 3P 50kA/25kA	XS2000ND 3P 50kA/25kA	XS2500ND 3P 50kA/25kA	XS3200ND 3P 50kA/25kA
	350V	S50-SD 3P 10kA/10kA	S125-SD 3P 10kA/10kA		S250-SD 3P 10kA/10kA		S400-ND 3P 20kA/20kA	S800-ND 3P 30kA/15kA	S1000-ND 3P 30kA/15kA					
	250V								S1000-ND 2P 50kA/20kA	XS1250ND 2P 50kA/30kA	XS1600ND 2P 50kA/30kA	XS2000ND 2P 50kA/30kA	XS2500ND 2P 50kA/30kA	XS3200ND 2P 50kA/30kA
Switch-disconnectors	1000V		PVS125-SNH 4P			PVS250-SNH 4P	PVS400-NNH 4P	PVS800-NNH 4P						
	800V		PVS125-SNL 4P			PVS250-SNL 4P	PVS400-NNL 4P	PVS800-NNL 4P						
	750V					PVS250-SNL 3P	PVS400-NNL 3P	PVS800-NNL 3P						
	600V		S125-SDN 3P		S250-SDN 3P									

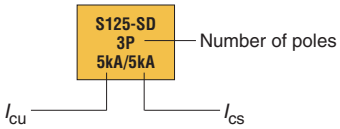

4 DC specification product instantaneous trip set current value

The table below shows the DC specification product instantaneous trip pickup current value. Note that the instantaneous trip pickup current value is different from the standard AC product. DC specification product is a special specification. When ordering, please specify DC. The DC specification product in the table below shows the instantaneous trip pickup current value for the products.

Breaker	Rated current (A)	DC instantaneous trip pickup current (A)
PS30-NF PE50-NF PS50-NF	15	450±90
	20	500±100
	30	600±120
PE50-NF PS50-NF	40	780±156
	50	960±192
PE60-NF PS60-NF PE125-NF	60	1125±225
PE125-NF	75	1300±260
	100	1950±390
	125	1950±390
S50-SF S125-SF	15	750±150
	20	750±150
	30	750±150
	40	750±150
	50	750±150
S125-SF	60	1220±244
	75	1220±244
	100	1940±388
	125	1940±388
PS50-PF PS125-NF PS125-PF	15	375±75
	20	375±75
	30	563±113
	40	750±150
	50	938±188
PS125-NF PS125-PF	60	1125±225
	75	1406±281
	100	1875±375
	125	1875±375
PS250-PF	125	2031±406
	150	2438±488
	175	2844±569
	200	3000±600
	225	3094±619
	250	3125±625

PS400-CF PS400-NF PS400-GF PH400-CF ①	Dial position / Rated current (A)	10	9	8	7	6	5
	225	2470	2180	1960	1640	1380	1125
	250	2760	2440	2130	1820	1530	1250
	300	3340	2950	2560	2200	1840	1500
	350	3930	3460	3010	2570	2150	1750
	400	4530	3980	3460	2950	2470	2000

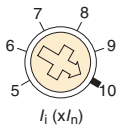

Selector dial

PS630-CF PS630-NF PS630-GF PH630-CF ②	Dial position / Rated current (A)	8	7	6	5	4
	500	4790	4030	3320	2660	2040
	600	6050	5050	4120	3260	2480

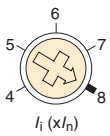

Selector dial

Note:

①: The dial position is set to 10 before delivery. The instantaneous trip pickup current value is indicated on the product within the range of MAX side (dial position 10) and MIN side (dial position 5). Setting tolerance: ±20%

②: The dial position is set to 8 before delivery. The instantaneous trip pickup current value is indicated on the product within the range of MAX side (dial position 8) and MIN side (dial position 4). Setting tolerance: ±20%

Nameplate example for S125-SF for 125A

Nameplate example for PS400-NF for 400A

5 Type 2 Heat Resistant Circuit Breaker for Emergency Power Supplies

Equipment used in emergency electric circuits is required to have heat resistance that can withstand the temperature of a fire and ensure the functions of conduction and insulation.
The Fire Defense Agency Notification No. 10 “Standard for Switchboards and Distribution Boards for Emergency Power Supply Dedicated Power Incoming Equipment that Receives Power at Low Voltage” stipulates the heat-resistant structure of boards and the heat-resistant performance of the equipment used, and sets the heat-resistant classifications Type 1 and Type 2.
Terasaki heat-resistant circuit breakers have been certified by the “Emergency Switchboard Certification Committee”.

Heat-resistant conduction performance (type 2 heat-resistant circuit breaker)

● Heat resistance standard

Following overheating for 30 minutes according to the 1/7 fire temperature curve, the heat-resistant rated current can be applied without any problem.

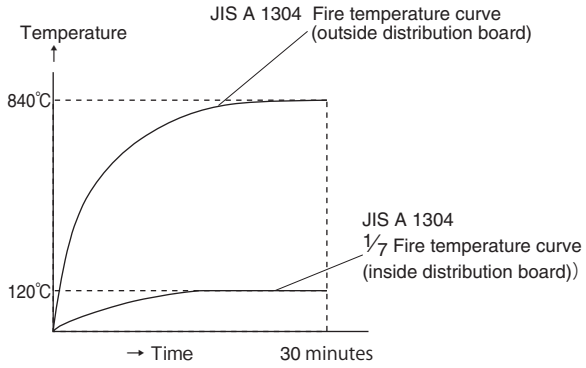

Heat-resistant conduction performance

● Heat-resistant rated current

Use the load current to be connected at the heat-resistant rated current of the heat-resistant circuit breaker (70% of the ambient temperature rated current) or less.
Also, select the connecting conductor size based on the rated current at ambient temperature.

Ratings and Specifications (type 2 heat-resistant circuit breaker)

Frame size (A)			50	50	50	100	225	400
Type			FC-52ET ③	FC-53ET ③	FC-50HET ④	FC-100ET ④	FC-225ET ⑤	FC-400ET ⑤
Number of poles			2	3	3	3	3	3
■Ratings								
Rated current, (A)			15(10.5) 20(14)	15(10.5) 20(14)	15(10.5) 20(14)	75(52.5)	150(105)	300(210)
The figure in parentheses is the heat-resistant rated current, A			30(21) 50(35)	30(21) 50(35)	30(21) 50(35)	100(70)	225(157.5)	400(280)
Rated voltage, V	AC		200	200	415	415	415	415
	DC		125①	125①	250①	250①	250	250
■Rated breaking capacity, kA (sym)								
JIS C 8201-2-1 Ann.2	AC	415 V	—	—	5	5	15	30
		200 V	2.5	2.5	10	10	30	42
	DC	250 V	—	—	5	5	10	20
		125 V	1.5	1.5	5	5	10	20
■External dimensions, mm								
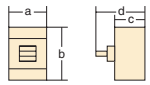	a		50	75	75	75	105	140
	b		100	100	100	100	165	257
	c		60	60	60	60	68	103
	d		84	84	84	84	95	146
Weight (◉ marked standard type) kg			0.4	0.5	0.5	0.6	1.3	5.0
■Connections and Mountings								
Front-connected (FC)	Terminal screws		◉ ②	◉ ②	◉ ②	◉	◉	◉ (With extension bars)
Rear-connected (RC)	Flat bar studs		○	○	○	○	○	○
Flush-mounted (FP)	Flat bar studs		○	○	○	○	○	○
■Accessories (optional)		Symbol						
Internally mounted	Auxiliary switch	A X	● 1C	● 1C	● 1C	● 1C	● 1C	● 1C
	Alarm switch	A L	●	●	●	●	●	●
■Heat resistance certification number			2CB-14184	2CB-14186	2CB-14185	2CB-14187	2CB-13182	2CB-13183
■Standard specifications								
Overcurrent trip mechanism			Hydraulic-magnetic type	Hydraulic-magnetic type	Hydraulic-magnetic type	Hydraulic-magnetic type	Thermal-magnetic	Thermal-magnetic
Colour of cover			Light grey	Light grey	Light grey	Light grey	Light grey	Light grey
Trip button			Yes	Yes	Yes	Yes	Yes	Yes
■Page of outline dimensions			7-242	7-242	7-242	7-242	7-242	7-242

Notes:
◉ : Standard. This configuration used unless otherwise specified. ○ : Optional standard. Specify when ordering. ● : “yes” or “available”.
— : “no” or “not available”. ① : DC requires special specifications. The standard product cannot be used for DC circuits, so be sure to specify DC when ordering. ② : With wire clamping screw. ③ : The terminal barrier is included only for DC specifications. (1×2P, 2×3P)
④ : Two terminal barriers are included. ⑤ : Four terminal barriers are included.

6 Thermal Adjustable Circuit Breaker for Overseas Plants

The thermal adjustable circuit breaker complies with European standards (EN standards).
The rated current is continuously adjustable from 63% to 100%.
The rated current is set to maximum I_n (100%) before delivery.

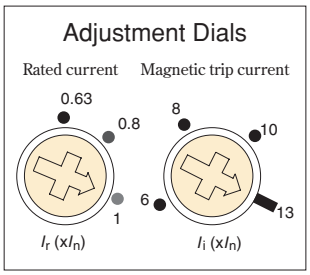

Ratings and Specifications

Frame size (A)	160			160			160			160			250			250			250			250		
Type	**S160-SCJ**			**S160-SJ**			**P160F**			**P160N**			**E250-SJ**			**P250F**			**P250N**			**P250H**		
Number of poles	3	4		3	4		3	4		3	4		3	4		3	4		3	4		3	4	
■ Ratings																								
Rated current, A Calibrated at 50℃	Rated current I_n	Adjustable range min	max	Rated current I_n	Adjustable range min	max	Rated current I_n	Adjustable range min	max	Rated current I_n	Adjustable range min	max	Rated current I_n	Adjustable range min	max	Rated current I_n	Adjustable range min	max	Rated current I_n	Adjustable range min	max	Rated current I_n	Adjustable range min	max
	25	16	25	25	16	25	20	12.5	20	20	12.5	20	100	63	100	50	32	50	50	32	50	50	32	50
	40	25	40	40	25	40	32	20	32	32	20	32	125	80	125	63	40	63	63	40	63	63	40	63
	63	40	63	63	40	63	50	32	50	50	32	50	160	100	160	80	50	80	80	50	80	80	50	80
	80	50	80	80	50	80	63	40	63	63	40	63	200	125	200	100	63	100	100	63	100	100	63	100
	100	63	100	100	63	100	100	63	100	100	63	100	250	160	250	125	80	125	125	80	125	125	80	125
	125	80	125	125	80	125	125	80	125	125	80	125				160	100	160	160	100	160	160	100	160
	160	100	160	160	100	160	160	100	160	160	100	160				200	125	200	200	125	200	200	125	200
																250	160	250	250	160	250	250	160	250
Category	A			A			A			A			A			A			A			A		
Rated insulation voltage, V	800			800			800			800			800			800			800			800		
■ Rated breaking capacity, kA																								
IEC 60947-2 I_{cu}/I_{cs} AC 690 V ①	—			6/3			6/6			6/6			—			6/6			6/6			6/6		
BS EN60947-2 525 V ①	7.5/4			10/7.5			18/18			22/18			7.5/6			22/22			25/25			30/25		
(sym) 480 V	7.5/4			10/7.5			25/22			35/22			10/7.5			25/22			36/25			50/25		
415 V	25/13			40/20			36/36			50/50			25/19			36/36			50/50			70/50		
220/240 V	35/18			50/25			50/50			85/85			35/27			50/50			85/85			85/85		
DC rated breaking capacity, kA DC 250 V	20/10			25/13			25/19			40/40			15/12			25/19			40/40			40/40		
Rated impulse withstand voltage, kV	8			8			8			8			8			8			8			8		
■ External dimensions, mm																								
a	75	100		75	100		90	120		90	120		105	140		105	140		105	140		105	140	
b	130			130			130			130			165			165			165			165		
c	68			68			68			68			68			68			68			68		
d	95			95			95.5			95.5			95			95.5			95.5			95.5		
Weight (◉ marked standard type) kg	0.8	1.0		0.8	1.0		1.0	1.3		1.0	1.3		1.5	1.9		1.5	2.0		1.5	2.0		1.5	2.0	
Colour of cover	Grey Blue			Grey Blue			Grey Blue			Grey Blue			Grey Blue			Grey Blue			Grey Blue			Grey Blue		

Frame size (A)	400			630			400			630			400			630			630			800		
Type	**P400F**			**P630F**			**P400N**			**P630N**			**P400H**			**P630H**			**S800-NJ**					
Number of poles	3	4		3	4		3	4		3	4		3	4		3	4		3	4		3	4	
■ Ratings																								
Rated current, A Calibrated at 50℃	Rated current I_n	Adjustable range min	max	Rated current I_n	Adjustable range min	max	Rated current I_n	Adjustable range min	max	Rated current I_n	Adjustable range min	max	Rated current I_n	Adjustable range min	max	Rated current I_n	Adjustable range min	max	Rated current I_n	Adjustable range min	max	Rated current I_n	Adjustable range min	max
	250	160	250	630	400	630	250	160	250	630	400	630	250	160	250	630	400	630	630	400	630	800	500	800
	400	250	400	②			400	250	400	②			400	250	400	②								
Category	A			A			A			A			A			A			A			A		
Rated insulation voltage, V	800			800			800			800			800			800			800			800		
■ Rated breaking capacity, kA																								
IEC 60947-2 I_{cu}/I_{cs} AC 690 V ①	7/7			7/7			12/12			12/12			12/12			12/12			20/20			20/20		
BS EN60947-2 525 V ①	20/20			20/20			22/22			22/22			35/35			35/35			30/30			30/30		
(sym) 480 V	25/25			25/25			30/30			30/30			50/50			50/50			30/30			30/30		
415 V	36/36			36/36			50/50			50/50			70/70			70/70			50/50			50/50		
220/240 V	50/50			50/50			85/85			85/85			100/100			100/100			85/85			85/85		
DC rated breaking capacity, kA DC 250 V	25/25			25/25			50/50			50/50			50/50			50/50			50/50			50/50		
Rated impulse withstand voltage, kV	8			8			8			8			8			8			8			8		
■ External dimensions, mm																								
a	140	185		140	185		140	185		140	185		140	185		140	185		210	280		210	280	
b	260			260			260			260			260			260			273			273		
c	103			103			103			103			103			103			103			103		
d	151			151			151			151			151			151			145			145		
Weight (◉ marked standard type) kg	5.5	7.3		5.9	7.8		5.5	7.3		5.9	7.8		5.5	7.3		5.9	7.8		8.5	11.5		8.5	11.5	
Colour of cover	Grey Blue			Grey Blue			Grey Blue			Grey Blue			Grey Blue			Grey Blue			Grey Blue			Grey Blue		

Note ① : Cannot be used with IT earthing systems.
② : Calibrated at 30°C not 50°C.

7 690V AC Circuit Breaker

A dedicated 690V AC circuit breaker. For the accessories, refer to the reference models in the table below.

Ratings and Specifications

Type	L125-PF	L400-PE	L800-PE
Number of poles	3	3	3
■ Ratings			
Rated current, A Calibrated at 45° C	15 60 20 75 30 100 40 125 50	(Adjustable) (Adjustable) 125 175 150 200 175 225 200 250 225 300 350 400	(Adjustable) 350 600 400 700 450 800 500
Rated insulation voltage〔U_i〕 V	690	690	690
Rated impulse withstand voltage〔U_{imp}〕 kV	8	8	8
■ Rated breaking capacity, kA			
JIS C 8201-2-1 Ann.1 Ann.2 AC 690V IEC 60947-2 I_{cu}/I_{cs}(sym)	70/33	70/50	70/50
■ Rated short time withstand current〔I_{cw}〕 kA	—	5(0.3sec)	10(0.3sec)
Weight (◉ marked standard type) kg	2.4	8.9	15.6
■ Connections and Mountings			
Front-connected (FC) Terminal screws	◉	—	—
With extension bars	○	—	—
Rear-connected (RC) Flat bar studs	○	○	○
Plug-in (PM) For switchboards High-performance (PMB)	○ ⑤1	○ ⑤1	○ ⑤1
Standard (PMC)	—	◉	◉
For distribution boards (PMD)	—	—	—
Flush-mounted (FP) With flat bar studs	—	—	—
Draw-out type (DR)	—	—	—
TemPlug70 (PG)	—	—	—
DIN rail mount	—	—	—
Clip-in chassis mount	—	—	—
■ Accessories (optional) Symbol			
Externally mounted: Motor operator M C	●	●	●
External operating handle: Breaker-mounted H B	●	●	●
Door-mounted (variable depth) H P	●	●	●
Toggle extension H A	—	—	●
Mechanical interlock: Slide type M S	●	●	●
Toggle holder H H	●	●	●
Toggle lock H L	●		
Terminal cover: For front-connected C F	●	—	—
For rear-connected and plug-in C R	● ⑦6	● ⑦6	● ⑦6
Terminal block for lead T F	●	●	●
Door flange D F	●	●	●
CE marking	Yes	Yes	Yes
Overcurrent trip mechanism	Thermal-magnetic	Electronic ⑯	Electronic ⑯
Colour of cover	Grey Blue	Grey Blue	Grey Blue
Trip button (Colour)	Yes (Red)	Yes (Red)	Yes (Red)
Suitability for isolation	Yes	Yes	Yes
Reverse connection	Non	Non	Non
Page of characteristics and outline dimensions	7-224	7-226	7-228
■ Reference model	**L125-NF**	**L400-NE**	**L800-NE**

Notes:
◉ : Standard. This configuration used unless otherwise specified.
○ : Optional standard. Specify when ordering. ● : "yes" or "available". — : "no" or "not available".
⑯ : Optional preferential trip alarm or ground fault trip function available on request.
⑤1 : A safety lock function is provided.
⑦6 : Terminal covers are provided as standard on the line side and load side.

MEMO

8 Special Mounting Dimensions 400 A Frame Circuit Breaker

A 400 A frame circuit breaker that supports special mounting dimensions. We offer a complete range of moulded case circuit breakers, circuit breakers with earth leakage alarm, single phase 3-wire circuit breakers with neutral phase open protection and earth leakage alarm, single phase 3-wire circuit breakers with neutral phase open protection, earth leakage circuit breakers, and single phase 3-wire earth leakage circuit breakers with neutral phase open protection. Please see Catalogue I64K for detailed specifications.

[Moulded Case Circuit Breakers]

Frame size (A)			400
Type			**E400-SF**
Number of poles			3
■ Ratings			
Rated current, A			250
Calibrated at 40° C			300
			350
			400
Rated insulation voltage〔U_i〕 V			690
Rated impulse withstand voltage〔U_{imp}〕 kV			8
Rated short time withstand current〔I_{cw}〕 kA			—
Utilization Category			A
■ Rated breaking capacity, kA			
JIS C 8201-2-1 Ann.1 Ann.2	AC	690V	—
IEC 60947-2		500V	15/15
I_{cu}/I_{cs}(sym)		440V	25/22
		415V	36/25
		380V	36/25
		240V	50/35
	DC	250V	—
		125V	—
■ External dimensions, mm			
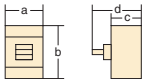		a	140
		b	257
		c	103
		d	145
Weight (◉ marked standard type) kg			4.1
Page of characteristics and outline dimensions			7-230

[Circuit breakers with earth leakage alarm (Harmonics/surge with countermeasure)]

Frame size (A)			400
Type			**ZAE400-SF**
Number of poles			3
■ Ratings			
Rated current, A			250
Calibrated at 40° C			300
			350
			400
Rated insulation voltage AC V			100-440 common
Operable voltage fluctuation range V			80 – 484
Rated impulse withstand voltage〔U_{imp}〕 kV			8
■ Rated breaking capacity, kA			
JIS C 8201-2-1 Ann.2	AC	440V	25
I_{cu}(sym)		415V	36
		240V	50
■ Earth leakage alarm specifications			
Earth leakage detection (Current operation type)			Electronic
Rated sensitivity current mA			100/200/500 selectable
Max. operating time sec			0.1/0.45/1.0 selectable
Earth leakage alarm output contact configuration			1c
Alarm reset function (manual reset)			Push button
■ External dimensions, mm			
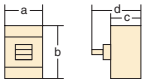		a	140
		b	257
		c	103
		d	145
Weight (◉ marked standard type) kg			4.7
Page of characteristics and outline dimensions			7-232

[Single phase 3-wire circuit breakers with neutral phase open protection and earth leakage alarm (Harmonics/surge with countermeasure)]

Frame size (A)			400
Type			**NAE400-SF**
Number of poles / Elements			3P3E
Phase and wires			1ø3W
■ Ratings			
Rated current, A			250
Calibrated at 40° C			300
			350
			400
Rated operational voltage AC V			100/200
Rated impulse withstand voltage〔U_{imp}〕 kV			8
Single 3-phase neutral wire open phase protection characteristics	Rated operating overvoltage AC V		135
	Rated non-operating overvoltage AC V		120
	Rated overvoltage operating time (sec)		1 or less
■ Rated breaking capacity, kA			
JIS C 8201-2-1 Ann.2 I_{cu} (sym)	AC	100/200V	50
■ External dimensions, mm			
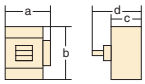		a	165
		b	257
		c	103
		d	145
Weight (◉ marked standard type) kg			4.9
■ Earth leakage alarm specifications			
Earth leakage detection (Current operation type)			Electronic
Rated sensitivity current mA			30/100/500 selectable
			100/200/500 selectable
Max. operating time sec			0.1/0.45/1.0 selectable
Earth leakage alarm output contact configuration ㉚			1c
Alarm reset function (manual reset) ㊴			Push button
Earth leakage indication			LED (Red)
Page of characteristics and outline dimensions			7-234

[Single phase 3-wire circuit breakers with neutral phase open protection]

Frame size (A)			400
Type			**NE400-SF**
Number of poles / Elements			3P3E
Phase and wires			1ø3W
■ Ratings			
Rated current, A			250
Calibrated at 40° C			300
			350
			400
Rated operational voltage AC V			100/200
Rated impulse withstand voltage〔U_{imp}〕 kV			8
Single 3-phase neutral wire open phase protection characteristics	Rated operating overvoltage AC V		135
	Rated non-operating overvoltage AC V		120
	Rated overvoltage operating time (sec)		1 or less
■ Rated breaking capacity, kA			
JIS C 8201-2-1 Ann.2 I_{cu} (sym)	AC	100/200V	50
■ External dimensions, mm			
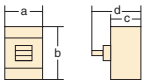		a	140
		b	257
		c	103
		d	145
Weight (◉ marked standard type) kg			4.2
Page of characteristics and outline dimensions			7-236

[Earth leakage circuit breakers (Harmonics/surge with countermeasure)]

Frame size (A)			400
Type			**ZE400-SF**
Number of poles			3
Phase and wires	1ø2W		●
	3ø3W, 1ø3W		●
	3ø4W		—
■ Ratings			
Rated impulse withstand voltage〔U_{imp}〕 kV			8
Rated current, A			250
Calibrated at 40° C			300
			350
			400
Rated operational voltage AC V	Instantaneous tripping type		100-440 common
	Operable voltage fluctuation range V		80 – 484
	Time delay tripping type		100-440 common
	Operable voltage fluctuation range V		80 – 484
Rated sensitivity current mA	Instantaneous tripping type		30
			100/200/500 selectable
			—
	Max. operating time sec		0.1
	Time delay tripping type		100/200/500 selectable
	Max. operating time sec		0.45/1.0/2.0 selectable
	Non-operating time sec		0.1/0.5/1.2 or over
■ Rated breaking capacity, kA			
JIS C 8201-2-2 Ann.2 I_{cu}(sym)	AC	440V	25
		415V	36
		240V	50
		100V	50
■ External dimensions, mm			
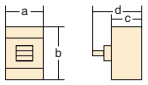		a	140
		b	257
		c	103
		d	145
Weight (◉ marked standard type) kg			4.7
Page of characteristics and outline dimensions			7-238

[Single phase 3-wire earth leakage circuit breakers with neutral phase open protection (Harmonics/surge with countermeasure)]

Frame size (A)			400
Type			**ZNE400-SF**
Number of poles / Elements			3P3E
Phase and wires			1ø3W
■ Ratings			
Rated current, A			250
Calibrated at 40° C			300
			350
			400
Rated operational voltage AC V			100/200
Rated impulse withstand voltage〔U_{imp}〕 kV			8
Rated sensitivity current mA	Instantaneous tripping type		30
			100/200/500 selectable
	Max. operating time sec		0.1
	Time delay tripping type		100/200/500 selectable
	Max. operating time sec		0.45
	Non-operating time sec		0.1
Single 3-phase neutral wire open phase protection characteristics	Rated operating overvoltage AC V		135
	Rated non-operating overvoltage AC V		120
	Rated overvoltage operating time (sec)		1 or less
■ Rated breaking capacity, kA			
JIS C 8201-2-2 Ann.2 I_{cu} (sym)	AC	100/200V	50
■ External dimensions, mm			
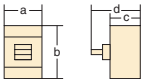		a	140
		b	257
		c	103
		d	145
Weight (◉ marked standard type) kg			4.7
Page of characteristics and outline dimensions			7-240

9 High-Performance Electronic Smart Circuit Breaker (TPOU type OCR)

The TPOU-type high-performance electronic OCR has the functions of long time-delay trip, short time-delay trip, instantaneous trip, preferential trip alarm, ground fault trip, zone interlock, and HOT characteristics/COLD characteristic selection. Additionally, the built-in VT and CT measure the current, voltage, instantaneous power, integrated electric energy, and power factor of the electric circuit, and display them on the OLED display mounted on the front of the circuit breaker. For the setting values of each function, set the values displayed on the OLED display with the joystick.

■ Outer view

■ TPOU type OCR applicable model

Breaker type	Rated current (I_n) (A)
PS125-NE, PS125-PE	100, 125
PS250-NE, PS250-PE	250
PS400-NE, PS400-GE, PH400-CE	250, 400
PS630-NE, PS630-GE, PH630-CE	630

- The display of the smart circuit breaker uses an OLED. As a result, the viewing angle is much wider than that of LCD, it is self-luminous and has excellent visibility. The display unit can be easily replaced by the customer.
- Since the OCR uses an r.m.s. value control method, the effects of harmonics do not cause any malfunction.
- Smart circuit breakers can be reversely connected.

■ Example of TPOU type OCR for PS630-NE

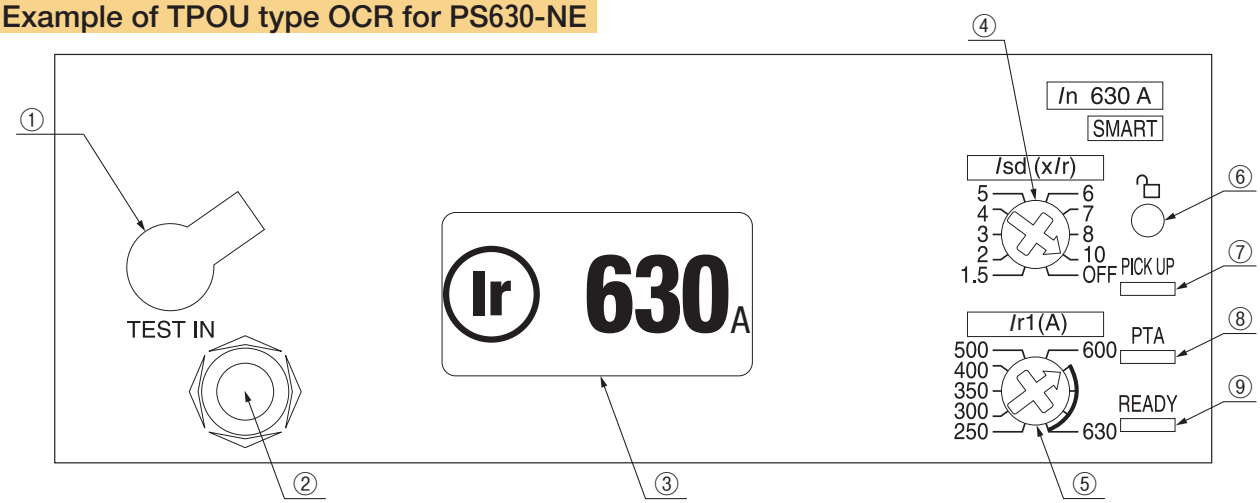

① A terminal for connecting the OCR checker.
② Joystick for OCR operation
Use the joystick to select and confirm the various setting values shown on the display.
③ OLED display
The OCR display uses an ultra-high definition built-in OLED display, so no backlight is required and the brightness can be adjusted. The display can be rotated by 90 degrees according to the installation position of the circuit breaker main unit.
Symbols are shown on the display to enable easy and clear operation.
④ Short time-delay trip set current dial
You can fine-tune between the selected magnification and magnification +0.5 one level below in additional 0.5× steps on the display.
⑤ Rated current setting dial
You can fine-tune between the selected current value and the current value one level below in additional 1A steps on the display.
⑥ Set value lock release button
You can unlock this button to change the setting on the display.
⑦ Alarm LED
Lights red during long time-delay pickup.
⑧ PTA LED
The preferential trip alarm flashes orange during pickup and lights when it is output.
⑨ Status LED
Lights green when the OCR is operating normally. Flashes orange if there is an error.

■ Measurement/monitoring of electric circuits and preventive maintenance with TPOU type OCR

The TPOU-type OCR human-machine interface flexibly responds to various user system requirements such as various measurement and status display, system and network protection, and alarm management.

・Data transmission of various types of information

Compatible with Modbus open network to connect the communication module, it transmits all kinds of data such as circuit status, circuit breaker settings, measurement data and event history information.

・Custom alarm

OCR can make a wide range of measurements such as voltage, current, power, electric energy, power factor, frequency, demand current, demand power, total harmonic distortion, trip history, and alarm history. The user can set an alarm for any 12 items among these measurements.

・Preventive maintenance with temperature monitoring

If the board temperature inside the circuit breaker exceeds 105°C, the “TEMP” symbol is shown on the display to indicate the abnormal. Please use this function for preventive maintenance to prevent problems caused by contact and terminal connections. Since the OCR requires high reliability, we use CPUs and ICs with an upper limit operating ambient temperature above +105°C.

・Zone interlock reduces damage to electric circuits

By setting a zone interlock between TemBreak PRO circuit breakers equipped with OCR, it is possible to trip the upstream circuit breaker closest to the accident location in the shortest time without waiting for the short time-delay setting time. This means that in the event of a short circuit accident, thermal and mechanical damage to the electric circuit can be reduced. Up to 7 circuit breakers can be linked between upstream and downstream breakers.
However, the number of upstream circuit breaker is multiple, control power supply is needed for all of them.
Zone-selective interlocks are possible not only between circuit breakers but also between TemPower2 air circuit breakers. Ground fault protection coordination is also possible with zone selective interlocks.

・Reliable maintenance work with built-in clock function

The OCR has two built-in clock functions: a user-set clock and a clock that measures the cumulative operating time of the OCR. The user-set clock allows the user to set the date and time as desired. The clock that measures the cumulative operating time of the OCR calculates the cumulative operating that the OCR has actually been energized.
In the event of power loss, the events prior to the power loss are stored in memory as a time-stamped event history, for both the user-set clock and the clock that measures the cumulative operating time of the OCR.
Using these clock functions, reliable maintenance work can be performed.

・Uses multi-feed control power supply

A multi-feed control power supply is adopted. In case Smart circuit breakers are connected with communication module and remote display, if the control power is supplied to the communication module, there is no need to additionally supply the control power to the OCR or the remort display.

・Supports hot start

For long time-delay trip, you can switch between cold start and hot start. Hot start can function even without a control power supply.

9 High-Performance Electronic Smart Circuit Breaker (TPOU type OCR)

■ Types of TPOU type overcurrent trip device (OCR)

Rated current I_n (A)	Poles	Protection code	Protection function ②				Alarm function ②		
			Long time-delay, Short time-delay, Instantaneous L, S, I ④	Ground fault trip GF	Neutral protection NP	Zone interlock ZSI ⑤	Preferential trip alarm PTA	Alarm contact output OAC ⑥	
100 125	3	SMART ①	●	●	—	●	●	●	
250 400 630	3	SMART ①	●	●	—	●	●	●	
	4	SMART	●	●	●	●	●	●	

● : Supplied as standard. ○ : Optional. — : "no" or "not available".

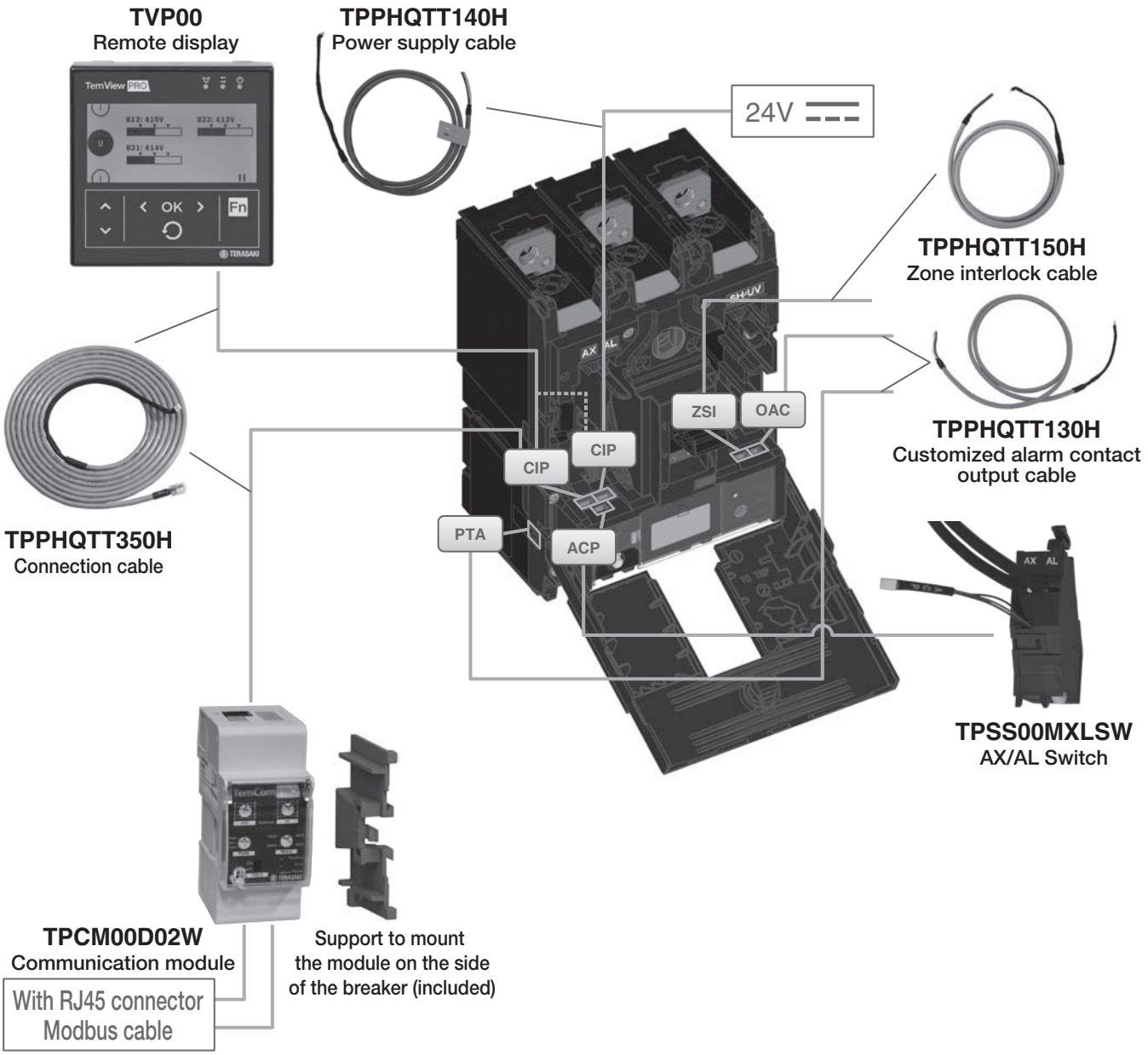

	Display function ③	Measurement/display function ③			Optional		
	OLED display (built into OCR)	Line voltage U, phase voltage V ⑦, current I, power P, electric energy E, Power factor PF, frequency F, demand D, total harmonic distortion THD	Trip history	Alarm history	Communication module TPCM ⑧	Remote display TPED ⑨	AX/AL switch TPSS ⑩
	●	●	●	●	○	○	○
	●	●	●	●	○	○	○
	●	●	●	●	○	○	○

Accessory order type	Accessory
TPCM00D02N	TPCM communication module (without contact input/output terminals)
TPCM00D02W	TPCM communication module (with contact input/output terminals)
TVP00	TVP remort display
TPPHQTT130H	PTA preferential trip alarm/OAC customized alarm contact output cable 1.2m
TPPHQTT140H (For PS125,250)	24V DC power supply cable 1.2m
TPPHQTT160H (For PS/PH400,630)	
TPPHQTT150H	ZSI zone interlock cable 1.2m
TPPHQTT330H (For PS125,250)	CIP remort display/ communication module Connection cable 0.5m
TPPHQTT430H (For PS/PH400,630)	
TPPHQTT340H (For PS125,250)	CIP remort display/ communication module Connection cable 1.5m
TPPHQTT440H (For PS/PH400,630)	
TPPHQTT350H (For PS125,250)	CIP remort display/ communication module Connection cable 3m
TPPHQTT450H (For PS/PH400,630)	
TPPHQTT360H (For PS125,250)	CIP remort display/ communication module Connection cable 5m
TPPHQTT460H (For PS/PH400,630)	
TPPHQTT370H (For PS125,250)	CIP remort display/ communication module Connection cable 10m
TPPHQTT470H (For PS/PH400,630)	
TPPHQTT500H	NSP cable 1.2m ①
TPSS00N	AX/AL switch ＊ (ACP output only)
TPSS00MXLSW	AX/AL switch ＊ (ACP output + contact output)
TPSS00MXLRW	AX/AL switch ＊ (ACP output + microload contact output)

＊: See page 4-18 for the specifications of the AX/AL switch.

Note ①: Not compatible with 3-phase 4-wire systems. Select the NSP cable (TPPHQTT500H) if using a 3 pole smart circuit breaker for 3-phease 4-wire power distribution.

Note ②: Control power supply is not required.

Note ③: By supplying the control power of 24 V DC to the OCR with the optional cable (order type TPPHQTT140H), the value is displayed even when the circuit breaker is OFF and when the internal power supply is not established due to the small main circuit current.
If a communication module supplied with control power is connected to the OCR, that control power is supplied to the OCR. This means that there is no need to supply additional control power to the OCR.

OCR control power supply
Voltage：24V DC ± 30%
Consumption current：60mA

Note ④: You can select not only general cold start characteristics, but also hot start characteristics that take into consideration the thermal characteristics of load equipment such as electric wires and electric motors.

Note ⑤: An optional cable (order type TPPHQTT150H) is required for the input/output of the zone interlock. For PS125-NE/PE circuit breakers, the zone interlock is output only.

Note ⑥: By connecting the optional cable (order type TPPHQTT130H), data can be contact output from only one of the following items.

- System (OCR operation) error alarm
- OCR abnormal temperature alarm
- Preferential trip alarm PTA
- 1 output of 12 custom alarms

Contact rating
Non-contact output 1a
Contact capacity 24V AC/DC 100mA

Note ⑦: Phase voltage is displayed only for 4-pole circuit breakers.

Note ⑧: Supply 24 V DC control power to the control power terminal of the communication module. The control power supplied to the communication module is also supplied to the OCR.

Note ⑨: Supply the 24 V DC control power to the OCR with the optional cable (order type TPPHQTT140H). Then, connect the optional cable (order type TPPHQTT330H to 470H) between the OCR and the remort display. This allows the OCR to supply control power to the remort display. However, if a communication module supplied with control power is connected to the OCR, it is not necessary to supply control power to the OCR.

Note ⑩: ON/OFF information for auxiliary switch 1c and alarm switch 1c is read by the OCR and output to the remort display and communication module.

■TPOU type OCR measurement/display function specifications

Measurement/display items		IEC 61557-12 Prescribed Class	Display ○: With display ×: No display	Remote display ○: With display ×: No display	Modbus ○: With communication ×: No communication
Current	Phase current	1	○	○	○
	Ground fault current	1	○	○	○
Voltage	Line voltage	0.5	○	○	○
	Phase voltage	0.5	○	○	○
Frequency		0.2	○	○	○
Electric power	Active power	2	○	○	○
	Reactive power	2	○	○	○
	Apparent power	2	○	○	○
Electric energy	Active electric energy	2	○	○	○
	Reactive electric energy	2	○	○	○
	Apparent electric energy	2	○	○	○
Demand	Electric power	2	×	○	○
	Current	1	×	○	○
Power factor		2	○	○	○
Total harmonic distortion	Current	2	×	○	○
	Voltage	2	×	○	○
Trip history	Accident current	—	○	○	○
	Cause of accident	—	○	○	○
	Accident occurrence phase	—	○	○	○
Alarm history	Alarm cause	—	○	○	○

Note: Electric energy, trip history, and alarm history are stored in the non-volatile memory when a trip occurs.

■Specifications of communication module

The communication module TPCM can communicate all the data recorded by the OCR to the Modbus RTU monitoring system. Modbus parameters are adjusted with the dial on the whole surface of the communication module.
The communication module can be mounted on the side of the circuit breaker by using the included support.

Item	Modbus specifications
Transmission signal	RS-485
Communication method	2-wire half duplex
Topology	Multi-drop bus connection
Transmission speed	Max. 38.4kbps
Transmission distance	Max. 1.2km (at 38.4kbps)
Data type	Modbus-RTU
Maximum number of nodes	1～99

■AX/AL switch specifications

The TPSS00N AX/AL switch is connected to the ACP (Auxiliary Connection Port) of the OCR and the OCR displays the ON/OFF status of the AX/AL switch. The OCR also displays the number of ON/OFF operations during OCR energization.

The TPSS00MXLSW standard AX/AL switch adds a standard contact output to the above TPSS00N AX/AL switch.

The TPSS00MXLRW microload AX/AL switch adds a contact output for microloads to the above TPSS00N AX/AL switch.

The table below shows the contact ratings of the TPSS00MXLSW standard switch and the TPSS00MXLRW microload switch.

• TPSS00MXLSW standard switch contact output

AC				DC			Minimum load
Voltage (V)	Current (A)			Voltage (V)	Current (A)		
	Resistive load	Inductive load power factor 0.7 or more	Inductive load power factor 0.3 or more		Resistive load	Inductive load time constant 15ms or less	
250	3	3	1	125	0.4	0.02	30mA at 10V DC
125	3	3	2	30	3	0.3	

• TPSS00MXLRW microload switch contact output

DC		Minimum load
Voltage (V)	Current (A) Resistive load	
30	0.1	1mA at 5V DC

■ Remote display

The remort display TVP00 can be easily mounted to a panel, etc. of a switchboard by connecting it from the OCR with a single cable. The backlit LCD display has good visibility even in dark places. Display is possible in 8 languages: Japanese, English, French, German, Italian, Spanish, Portuguese, and Chinese.

Display items
Circuit breaker protection setting value
Measured value of electric circuit
Alarm information
Event history information
Breaker identification information

Settings/change items
Circuit breaker protection setting value
Measured value parameters
Output contact parameters
Alarm management setting values

■ TTP00 type OCR checker

The OCR checker is to easily check the OCR's long time-delay, short time-delay, instantaneous trip, ground fault trip and preferential trip alarm functions in the field. See page 9-6 for details.

■ Overcurrent tripping characteristics

Rated current (I_n) : 100A, 125A

Rated current settings (A) : (I_r) ① ②		When (I_n) = 100 A (I_r1) (A) = 40, 50, 60, 63, 75, 100 adjustable When (I_n) = 125 A (I_r1)(A)=125 Select (I_r1) with the dial. Adjustable in 1 A steps between the selected (I_r1) and the level below (I_r1). However, the minimum is 40 A when (I_n) = 100 A and 101 A when (I_n) = 125 A. ③
Long time-delay time settings (s) : (t_r)		0.5, 1.5, 2.5, 5, 7.5, 9, 10, 12, 14, 16 adjustable at (I_r)×600% Time-delay setting tolerance –20% –20ms or more +0% +30ms or less
Short time-delay pick-up current (A) : (I_{sd})		(I_r)×1.5 to 10 (0.5 steps) or OFF Current setting tolerance within ±10%
Short time-delay time settings (ms) : (t_{sd})		50, 100, 200, 300, 400 adjustable Ramp characteristics I²t: ON or OFF However, definite time-delay characteristics with (I_r)×10 or more When (t_{sd}) = 50ms Time-delay setting tolerance –30 ms or more +30 ms or less When (t_{sd}) = 100ms to 400ms Time-delay setting tolerance –20 ms or more +50 ms or less
Instantaneous trip pick-up current (A) : (I_i)		When (I_n) = 100 A (I_n) × 3 to 15 (0.5 step) When (I_n) = 125 A (I_n) × 3 to 11 (0.5 step) Current setting tolerance within ±15%
Ground fault trip pick-up current (A) : (I_g)		3P for 3ø3W (3P 3ø4W not supported ④) (I_n)×20% to 100% (5% steps) or OFF Current setting tolerance within ±10%
Ground fault trip time settings (ms) : (t_g)		50, 100, 200, 300, 400, 500 adjustable Ramp characteristics I²t: ON or OFF ⑤ However, definite time-delay characteristics with (I_n)×1 or more Time-delay setting tolerance –20 ms or more +50 ms or less
Preferential trip alarm pick-up current (A) : (I_p)		(I_r)×60% to 80% to 95% (5% steps) or OFF Current setting tolerance within ±10%
Preferential trip alarm time settings (s) : (t_p)		(t_r)×5% to 50% to 80% (5% steps) at (I_P)×600% Time-delay setting tolerance –20% –20ms or more +0% +30ms or less
ZSI Zone interlock	STD Short time-delay	ON or OFF
	GF Ground fault trip	ON or OFF
Start operating characteristics		Hot start/cold start (selectable)

Rated current (I_n) : 250A

Rated current settings (A) : (I_r) ①		(I_r1) (A) = 125, 150, 175, 200, 225, 250 adjustable ⑥ Select (I_r1) with the setting dial. Adjustable in 1A steps between the selected (I_r1) and the level below (I_r1). However, the minimum is 125A.
Long time-delay time settings (s) : (t_r)		0.5, 1.5, 2.5, 5, 7.5, 9, 10, 12, 14, 16 adjustable at (I_r)×600% Time-delay setting tolerance –20% –20ms or more +0% +30ms or less
Short time-delay pick-up current (A) : (I_{sd})		(I_r)×1.5 to 10 (0.5 steps) or OFF ⑦ Current setting tolerance within ±10%
Short time-delay time settings (ms) : (t_{sd})		50, 100, 200, 300, 400 adjustable Ramp characteristics I²t: ON or OFF However, definite time-delay characteristics with (I_r)×10 or more When (t_{sd}) = 50ms Time-delay setting tolerance –30 ms or more +30 ms or less When (t_{sd}) = 100ms to 400ms Time-delay setting tolerance –20 ms or more +50 ms or less
Instantaneous trip pick-up current (A) : (I_i)		(I_n)×3 to 11 (0.5 steps) Current setting tolerance within ±15%
Neutral protection pick-up current ⑧ (A) : (I_N)		For 4P (I_r)×50%, 100% or OFF ⑨
Neutral protection time settings (s) : (t_N)		Operates with long time-delay time setting (t_r) and short time-delay time setting (t_{sd}) and also operates with instantaneous trip ⑩
Ground fault trip pick-up current (A) : (I_g)		3P for 3ø3W, 4P for 3ø4W (3P 3ø4W not supported ④) (I_n)×20% to 100% (5% steps) or OFF Current setting tolerance within ±10%
Ground fault trip time settings (ms) : (t_g)		50, 100, 200, 300, 400, 500 adjustable Ramp characteristics I²t: ON or OFF ⑤ However, definite time-delay characteristics with (I_n)×1 or more Time-delay setting tolerance –20 ms or more +50 ms or less
Preferential trip alarm pick-up current (A) : (I_p)		(I_r)×60% to 80% to 95% (5% steps) or OFF Current setting tolerance within ±10%
Preferential trip alarm time settings (s) : (t_p)		(t_r)×5% to 50% to 80% (5% steps) at (I_P)×600% Time-delay setting tolerance –20% –20ms or more +0% +30ms or less
ZSI Zone interlock	STD Short time-delay	ON or OFF
	GF Ground fault trip	ON or OFF
Start operating characteristics		Hot start/cold start (selectable)

Remarks: If not otherwise specified, the product will be delivered with the underlined standard setting values.

Notes:

①: Trip with a pickup current value exceeding I_r × 1.05 and 1.2 or less.

②: It is a rated current adjustable product. The rated operational voltage is AC380 to 690V, and it is not subject to the Act on Product Safety of Electrical Appliances and Materials. Please contact us for details.

③: In the case of I_n=100A, I_r is adjustable in 1A steps between 40, 41 to 50, 51 to 60, 61 to 63, 64 to 75, 76 to 100.
In the case of I_n=125A, I_r is adjustable in 1A steps between 101 and 125.

④: A 3-pole circuit breaker cannot be used with a 3-phase 4-wire system.

⑤: The ramp characteristics can be switched ON/OFF separately from the short time-delay trip.

⑥: I_r is adjustable in 1A steps between 125, 126 to 150, 151 to 175, 176 to 200, 201 to 225, 226 to 250.

⑦: Adjustable to I_{sd}=I_r × 10 –9.5 –9 –8.5 –8 –7.5 –7 –6.5 –6 –5.5 –5 –4.5 –4 –3.5 –3 –2.5 –2 –1.5.

⑧: Trip with a pickup current value exceeding I_N × 1.05 and 1.2 or less.

⑨: There is no N-phase protection function for 3P. Always set it to OFF.

⑩: The ON/OFF of the ramp characteristics conform to the short time-delay trip settings.

Rated current (I_n) : 250A, 400A

Rated current settings (A) : (I_r) ①		In the case of (I_n)=250 A Adjustable to (I_r1)(A)=125, 150, 175, 200, 225, 250 In the case of (I_n)=400 A Adjustable to (I_r1)(A)=175, 200, 225, 250, 300, 350, 400 Select (I_r1) with the dial. Adjustable in 1 A steps between the selected (I_r1) and the level below (I_r1). However, the minimum is 125 A when (I_n)=250 A, and 175 A when (I_n)=400 A. ⑩
Long time-delay time settings (s) : (t_r)		0.5, 1.5, 2.5, 5, 7.5, 9, 10, 12, 14, 16 adjustable at (I_r)×600% Time-delay setting tolerance –20% –20ms or more +0% +30ms or less
Short time-delay pick-up current (A) : (I_{sd})		(I_r)×1.5, 2, 3, 4, 5, 6, 7, 8, 10 or OFF Select the magnification with the setting dial. You can adjust between the selected magnification and magnification +0.5 one level below in additional 0.5× steps on the display. ⑪ Current setting tolerance within ±10%
Short time-delay time settings (ms) : (t_{sd})		50, 100, 200, 300, 400 adjustable Ramp characteristics I²t: ON or OFF However, definite time-delay characteristics with (I_r)×10 or more When (t_{sd}) = 50ms Time-delay setting tolerance –30 ms or more +30 ms or less When (t_{sd}) = 100ms to 400ms Time-delay setting tolerance –20 ms or more +50 ms or less
Instantaneous trip pick-up current (A) : (I_i)		(I_n)×3 to 12 (0.5 steps) Current setting tolerance within ±15%
Neutral protection pick-up current ⑦ (A) : (I_N)		For 4P (I_r)×50%, 100% or OFF ⑧
Neutral protection time settings (s) : (t_N)		Operates with long time-delay time setting (t_r) and short time-delay time setting (t_{sd}) and also operates with instantaneous trip ⑨
Ground fault trip pick-up current (A) : (I_g)		3P for 3ø3W, 4P for 3ø4W (3P 3ø4W not supported ③) (I_n)×20% to 100% (5% steps) or OFF Current setting tolerance within ±10%
Ground fault trip time settings (ms) : (t_g)		50, 100, 200, 300, 400, 500 adjustable Ramp characteristics I²t: ON or OFF ④ However, definite time-delay characteristics with (I_n)×1 or more Time-delay setting tolerance –20 ms or more +50 ms or less
Preferential trip alarm pick-up current (A) : (I_p)		(I_r)×60% to 80% to 95% (5% steps) or OFF Current setting tolerance within ±10%
Preferential trip alarm time settings (s) : (t_p)		(t_r)×5% to 50% to 80% (5% steps) at (I_P)×600% Time-delay setting tolerance –20% –20ms or more +0% +30ms or less
ZSI Zone interlock	STD Short time-delay	ON or OFF
	GF Ground fault trip	ON or OFF
Start operating characteristics		Hot start/cold start (selectable)

Rated current (I_n) : 630A

Rated current settings (A) : (I_r) ①		Adjustable to (I_r1)(A)=250, 300, 350, 400, 500, 600, 630 Select (I_r1) with the dial. Adjustable in 1A steps between the selected (I_r1) and the level below (I_r1). However, the minimum is 250 A. ⑫
Long time-delay time settings (s) : (t_r)		0.5, 1.5, 2.5, 5, 7.5, 9, 10, 12, 14, 16 adjustable at (I_r)×600% Time-delay setting tolerance –20% –20ms or more +0% +30ms or less
Short time-delay pick-up current (A) : (I_{sd})		(I_r)×1.5, 2, 3, 4, 5, 6, 7, 8, 10 or OFF Select the magnification with the setting dial. You can adjust between the selected magnification and magnification +0.5 one level below in additional 0.5× steps on the display. ⑪ Current setting tolerance within ±10%
Short time-delay time settings (ms) : (t_{sd})		50, 100, 200, 300, 400 adjustable Ramp characteristics I²t: ON or OFF However, definite time-delay characteristics with (I_r)×10 or more When (t_{sd}) = 50ms Time-delay setting tolerance –30 ms or more +30 ms or less When (t_{sd}) = 100ms to 400ms Time-delay setting tolerance –20 ms or more +50 ms or less
Instantaneous trip pick-up current (A) : (I_i)		(I_n)×3 to 11 (0.5 steps) Current setting tolerance within ±15%
Neutral protection pick-up current ⑦ (A) : (I_N)		For 4P (I_r)×50%, 100% or OFF ⑧
Neutral protection time settings (s) : (t_N)		Operates with long time-delay time setting (t_r) and short time-delay time setting (t_{sd}) and also operates with instantaneous trip ⑨
Ground fault trip pick-up current (A) : (I_g)		3P for 3ø3W, 4P for 3ø4W (3P 3ø4W not supported ③) (I_n)×20% to 100% (5% steps) or OFF Current setting tolerance within ±10%
Ground fault trip time settings (ms) : (t_g)		50, 100, 200, 300, 400, 500 adjustable Ramp characteristics I²t: ON or OFF ④ However, definite time-delay characteristics with (I_n)×1 or more Time-delay setting tolerance –20 ms or more +50 ms or less
Preferential trip alarm pick-up current (A) : (I_p)		(I_r)×60% to 80% to 95% (5% steps) or OFF Current setting tolerance within ±10%
Preferential trip alarm time settings (s) : (t_p)		(t_r)×5% to 50% to 80% (5% steps) at (I_P)×600% Time-delay setting tolerance –20% –20ms or more +0% +30ms or less
ZSI Zone interlock	STD Short time-delay	ON or OFF
	GF Ground fault trip	ON or OFF
Start operating characteristics		Hot start/cold start (selectable)

Remarks: If not otherwise specified, the product will be delivered with the underlined standard setting values.

Notes:

①: Trip with a pickup current value exceeding I_r × 1.05 and 1.2 or less.

③: A 3-pole circuit breaker cannot be used with a 3-phase 4-wire system.

④: The ramp characteristics can be switched ON/OFF separately from the short time-delay trip.

⑦: Trip with a pickup current value exceeding I_N × 1.05 and 1.2 or less.

⑧: There is no N-phase protection function for 3P. Always set it to OFF.

⑨: The ON/OFF of the ramp characteristics conform to the short time-delay trip settings.

⑩: In the case of I_n=250A, I_r is adjustable in 1A steps between 125, 126 to 150, 151 to 175, 176 to 200, 201 to 225, 226 to 250.
In the case of I_n=400A, I_r is adjustable in 1A steps between 175, 176 to 200, 201 to 225, 226 to 250, 251 to 300, 301 to 350, 351 to 400.

⑪: As an example
When the setting dial is set to I_r × 10, on the display, I_{sd}=I_r × 10 –9.5 –9 –8.5 is adjustable.
When the setting dial is set to I_r × 8, on the display, I_{sd}=I_r × 8 –7.5 is adjustable.
When the setting dial is set to I_r × 2, on the display, I_{sd}=I_r × 2 is fixed.

⑫: I_r is adjustable in 1A steps between 250, 251 to 300, 301 to 350, 351 to 400, 401 to 500, 501 to 600, 601 to 630.

■ Operating characteristic curve

Long time-delay trip, short time-delay trip characteristics

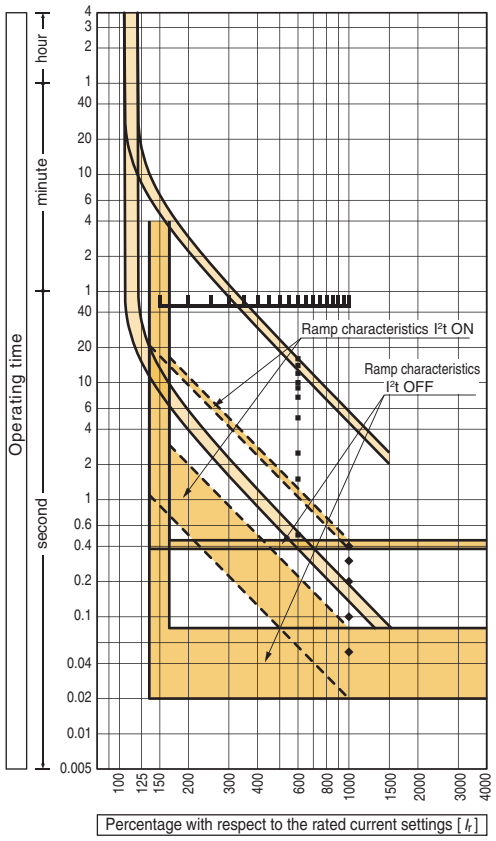

Instantaneous trip characteristics

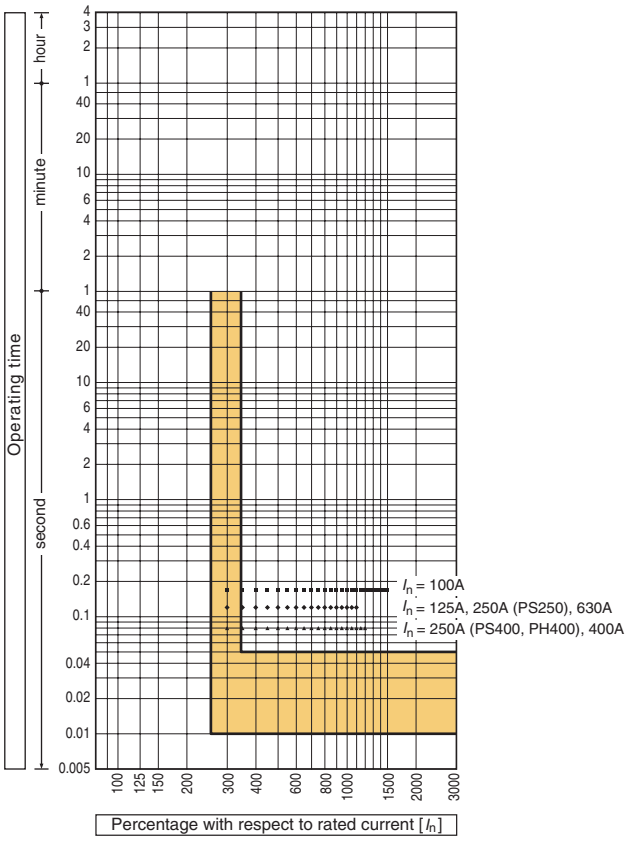

N-phase protection, preferential trip alarm characteristics

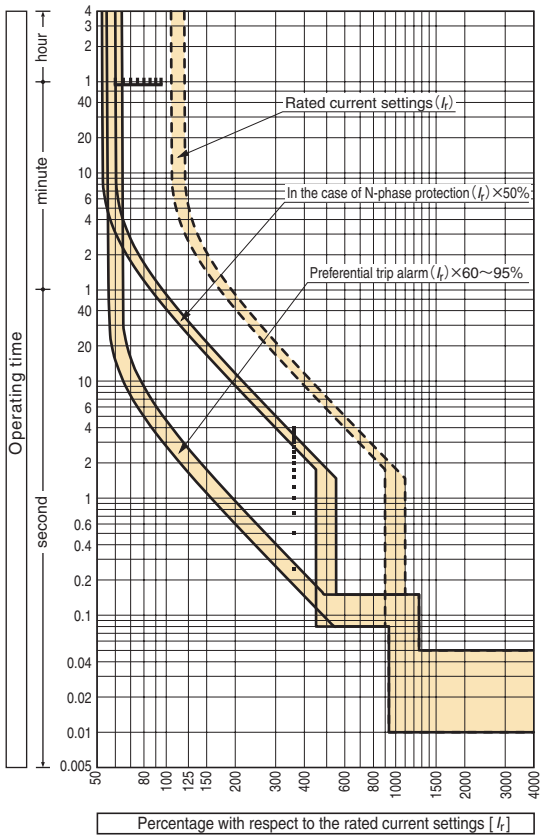

Ground fault trip characteristics

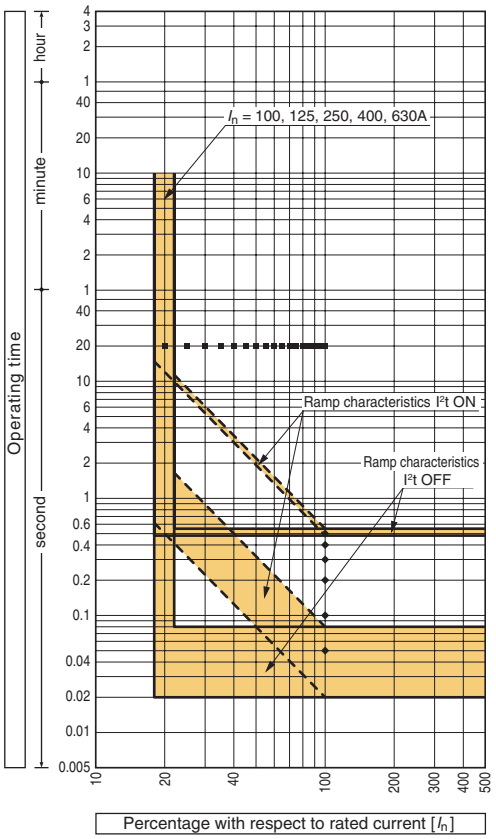

10 High-Performance Electronic Circuit Breaker (XOW type OCR)

The XOW type high-performance electronic OCR measures the electric circuit current, voltage, instantaneous power, integrated electric energy, and power factor using the built-in VT and CT and displays them on the LCD mounted on the front of the circuit breaker. Also, it supports Modbus open network and transmits these measurement data and accident history information as data.

■ Outer view

- The LCD display window displays the phase current, line voltage and their maximum values, and the power factor, power, and electric energy. Also, it can display the 1st to 19th harmonic currents for each phase.
- In the event of an accident, it displays the cause of operation and the accident current, and even if power is lost, the data is stored so that you can check the accident history after the power is restored.

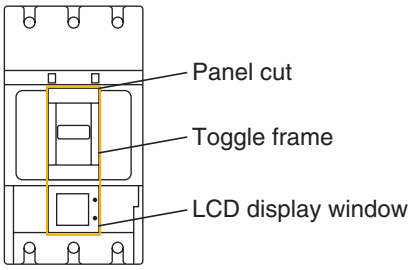

The width of the LCD display window is the same as the width of the toggle frame, so it is easy to perform panel cut.

- We offer 3 types of circuit breakers with the display rotated 90 degrees to the left or right so that the LCD display can be aligned with the circuit breaker mounting orientation.

Vertical ON side up (general mounting)	Horizontal ON side right	Horizontal ON side left
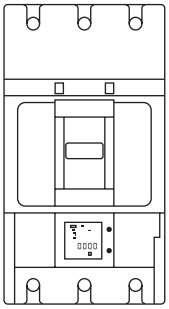	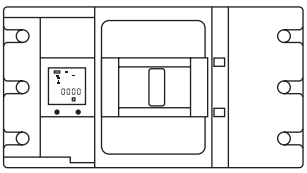	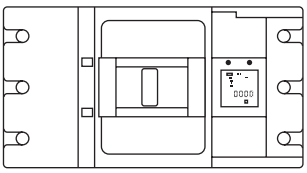

If you require horizontal mounting, please specify either “Horizontal ON side right” or “Horizontal ON side left” when ordering.
If not otherwise specified, we will deliver “Vertical ON side up”.

10 High-Performance Electronic Circuit Breaker (XOW type OCR)

Types of XOW type overcurrent trip device (OCR)

OCR type	Protection function				Alarm function	Display function	
	Long time-delay Short time-delay Instantaneous	Ground fault trip ①	Neutral protection	Reverse phase protection	Preferential trip alarm	LCD screen display	LCD backlight
	A	GF	NP	NS	PTA		
XOW-1L-A	●	—	—	—	—	●	—
XOW-1L-AGN	●	●	●	—	—	●	—
XOW-1L-AP	●	—	—	—	●	●	—
XOW-1L-APGNS	●	●	●	●	●	●	—
XOW-1L-APC	●	—	—	—	●	●	—
XOW-1L-APGNSC	●	●	●	●	●	●	—
XOW-1S-A	●	—	—	—	—	●	●
XOW-1S-AGN	●	●	●	—	—	●	●
XOW-1S-AP	●	—	—	—	●	●	●
XOW-1S-APGNS	●	●	●	●	●	●	●
XOW-1S-APCWH	●	—	—	—	●	●	●
XOW-1S-APGNSCWH	●	●	●	●	●	●	●

● : Standard equipment.
○ : Optional.
— : "no" or "not available".
① : In the case of (I_{CT})=250 A, ground fault trip is not available.

XOW type OCR measurement/display function specifications

Measurement/display items (accuracy)		Modbus communication function ○ : Yes — : No	Remarks
Load current (±1.5%)	Present value of each phase	○	It is also possible to display ground fault current and reverse phase current depending on the specifications.
	Present value of maximum phase	○	Measures and displays the value of the max. phase of the R, S, and T phases.
Line voltage (±1.0%)	Present value between each line	○	
	Present value of maximum line voltage	○	
	Present value of phase voltage of each phase	○	Only selectable for 4-pole products
Harmonic current (±2.5%)	Present values of the 3rd, 5th, 7th, ... 19th order of each phase	—	
Electric power (±2.5%)	Present value	○	
	Demand value	○	
	Max. demand value	○	
Electric energy (±2.5%)	Electric energy	○	
Power factor (±5%)	Present value	○	
Trip history	Accident current (±1.5%)	○	
	Accident cause display	○	
Alarm history	Display of alarm cause and alarm operation value	○	

Note: Electric energy is stored in flash memory every 2 hours and accident current and accident cause display are stored in flash memory when a trip occurs.

	Measurement/display function						Communication function Modbus	Remote display	Test function	Operation display contact output	Control power supply
	Current	Voltage, power, electric energy, power factor, demand power	Electric energy pulse output	Harmonic current	Trip history	Alarm history					
			W	H			C	I		Y	
	●	—	—	—	●	●	—	—	●	—	Required
	●	—	—	—	●	●	—	—	●	—	Required
	●	—	—	—	●	●	—	—	●	●	Required
	●	—	—	—	●	●	—	—	●	●	Required
	●	—	—	—	●	●	●	—	●	●	Required
	●	—	—	—	●	●	●	—	●	●	Required
	●	●	—	—	●	●	—	—	●	—	Required
	●	●	—	—	●	●	—	—	●	—	Required
	●	●	—	—	●	●	—	—	●	●	Required
	●	●	—	—	●	●	—	—	●	●	Required
	●	●	●	●	●	●	●	○	●	●	Required
	●	●	●	●	●	●	●	○	●	●	Required

■Transmission line interface input/output specifications

Item	Modbus specifications
Transmission signal	RS-485
Communication method	2-wire half duplex
Topology	Multi-drop bus connection
Transmission speed	Max. 19.2 kbps
Transmission distance	Max. 1.2 km (for 19.2kbps)
Data type	Modbus-RTU
Maximum number of nodes	1 – 31

10 High-Performance Electronic Circuit Breaker (XOW type OCR)

Overcurrent tripping characteristics

Frame size (A)	Applicable circuit breaker type	CT rated primary current I_{CT}	Rated current I_n
400	**H400-NE, L400-NE**	250A	125-150-175-200-225A
		400A	175-200-225-250-300-350-400A
630	**S630-NE, H630-NE, L630-NE**	630A	250-300-350-400-500-600-630A
800	**S800-NE, H800-NE, L800-NE**	800A	350-400-450-500-600-700-800A
1000	**S1000-CE**	1000A	400-500-600-700-800-900-1000A

Protection function		Symbol	Setting range
Long time-delay trip LT	Pick-up current (A)	I_r	(I_n)×1 • Non-trip at (I_r)×1.05 or less • Trip operation is performed with a pickup current value exceeding (I_r)×1.05 and 1.2 or less.
	Time setting (s)	t_r	At (I_r) 600% current 0.5-1.25-2.5-5-10-15-20-25-30s ① Time-delay setting tolerance ±20% +0.13s −0s
	COLD / HOT characteristic switching	—	COLD / HOT
Short time-delay trip ST	Pick-up current (A)	I_{sd}	(I_n)×(1-1.5-2-2.5-3-4-6-8-10-NON) ② Current setting tolerance ±15%
	Time setting (s)	t_{sd}	Ramp characteristics I^2t at OFF: 0.05-0.1-0.2-0.3 s Definite time-delay characteristics Current setting tolerance +50ms −20ms Ramp characteristics I^2t at ON: 0.05-0.1-0.2-0.3s Definite time-delay characteristics with (I_n)×1000% or more ③
	Ramp characteristic switching	—	OFF / ON
Magnetic trip current INST	Pick-up current (A)	I_i	(I_n)×(2-3-4-6-8-10-12-13-14-NON) ④ ⑤ Current setting tolerance ±20%
Ground fault trip GF ⑦	Pick-up current (A)	I_g	(I_{CT})×(0.2-0.3-0.4-NON) Current setting tolerance ±20%
	Time setting (s)	t_g	Ramp characteristics I^2t at OFF: 0.1-0.2-0.3-0.4-0.8 s Definite time-delay characteristics Time-delay setting tolerance +50ms −20ms Ramp characteristics I^2t at ON: (I_{CT}) 40% or more and 0.1-0.2-0.3-0.4-0.8 s
	Ramp characteristic switching	—	OFF / ON
	Operation mode switching	—	TRIP / OFF ⑥
Neutral protection NP	Pick-up current (A)	I_N	(I_{CT})×(0.4-0.5-0.63-0.8-1.0-NON) • Non-trip at (I_N) ×1.05 or less • Trip operation is performed with a pickup current value exceeding (I_N)×1.05 and 1.2 or less.
	Time setting (s)	t_N	Operates at LT time setting at (I_N) ×600% current.
	COLD / HOT characteristic switching	—	COLD / HOT
Reverse phase protection NS	Pick-up current (A)	I_{NS}	(I_n)×(0.2-0.3-0.4-0.5-0.6-0.7-0.8-0.9-1.0) Current setting tolerance ±10%
	Time setting (s)	t_{NS}	At (I_{NS}) ×150% current 0.4-0.8-1.2-1.6-2.0-2.4-2.8-3.2-3.6-4.0s Time-delay setting tolerance ±20% +0.13s −0s
	Operation mode switching	—	TRIP / OFF ⑥
Preferential trip alarm PTA	Pick-up current (A)	I_P	(I_n)×(0.7-0.8-0.9-1.0) Current setting tolerance ±10%
	Time setting (s)	t_P	I_P or more and 5-10-15-20-40-60-80-120-160-200s Time-delay setting tolerance ±10% +0.1s −0s
	Operation mode switching	—	AL / OFF ⑥

Notes:
①: In the case of S1000, it is 0.5-1.25-2.5-5-10-15-16 s.
②: In the case of S1000, it is 1-1.5-2-2.5-3-4-6-8-NON.
③: In the case of S1000, it is Definite time-delay characteristics with (I_n) × 800% or more.
④: In the case of H400, L400, it is set to Max. (I_{CT}) × 1300%. In the case of S630, S800, H630, H800, L630, L800, it is set to Max. (I_{CT}) × 1200%.
In the case of S1000, it is set to Max. (I_{CT}) × 1000%.
⑤: When short time-delay trip is set to NON, instantaneous trip cannot be set to NON. When instantaneous trip is set to NON, short time-delay trip cannot be set to NON.
⑥: When OFF is selected, the protection function does not operate.
⑦: In the case of (I_{CT})=250 A, ground fault trip cannot be used.
Remarks: If not otherwise specified, the product will be delivered with the underlined standard setting values.

■Operating characteristic curve

Long time-delay trip, instantaneous trip characteristics

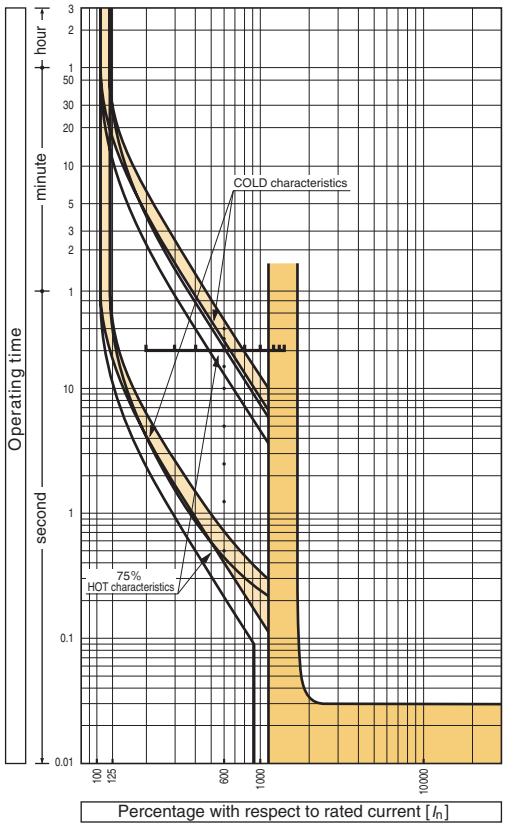

Short time-delay trip characteristics

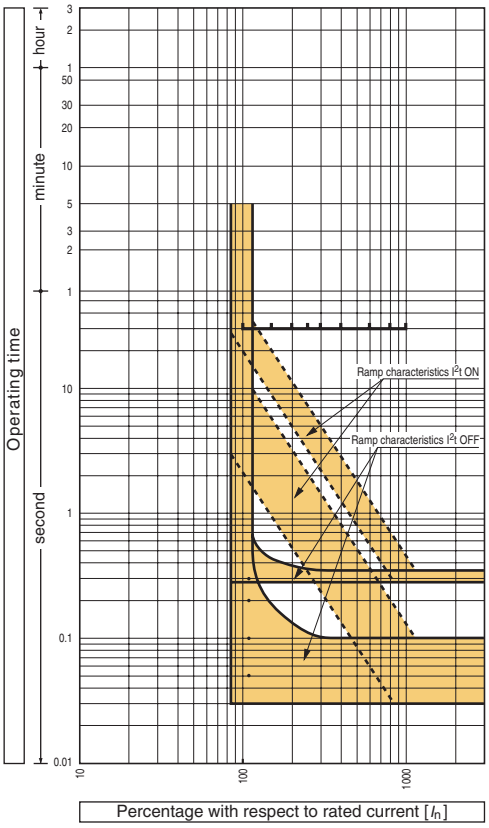

N-phase protection, ground fault trip characteristics

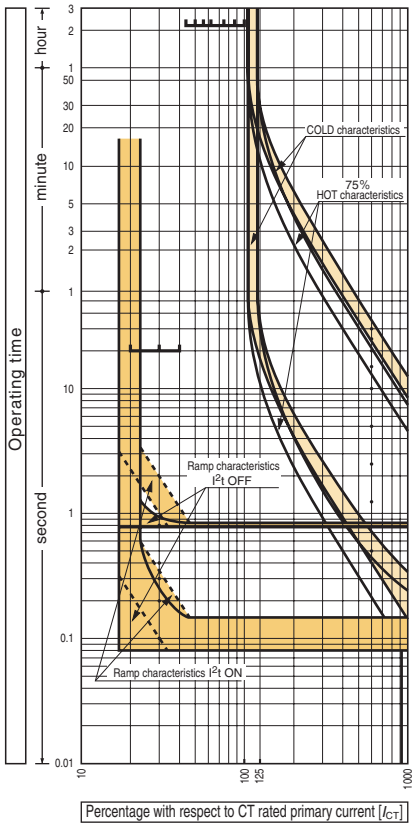

Reverse phase protection, preferential trip alarm characteristics

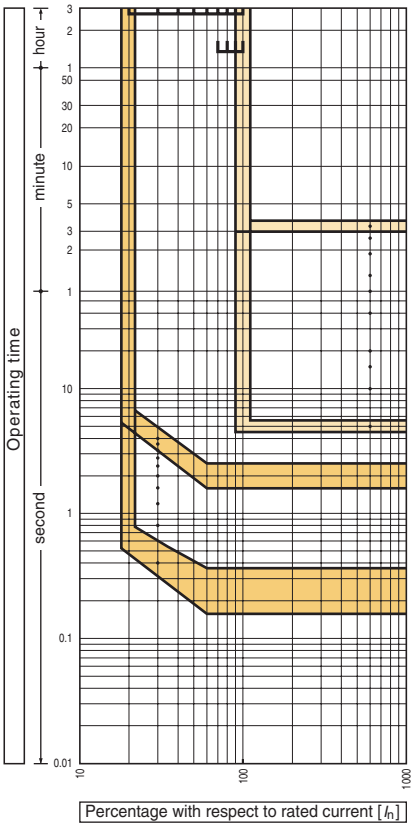

10 High-Performance Electronic Circuit Breaker (XOW type OCR)

■ XOW type OCR controller

The XOW type electronic OCR requires a control power supply and an XOW type OCR controller (supplied by Terasaki). When ordering, please specify whether you would like the OCR controller to be mounted on the breaker or separate.

Note ① : When the OCR controller is mounted on the breaker, the shunt trip device/undervoltage trip device with lead wire terminal block cannot be used.

● OCR controller specifications

Control power supply Note ② (rated voltage)	100 to 120V AC or 200 to 240V AC
VA consumption	2VA

Note ② : The allowable voltage range of the control power supply is 85 to 110% of the rated voltage. When ordering, please specify the rated voltage.

● OCR controller breaker mounting position/terminal arrangement diagram

Applicable circuit breaker		A(mm)	B(mm)	C(mm)	D(mm)
S400	3P、4P	80	74	25.2	16.2
H400, L400	3P、4P	80	111	25.2	16.2
S630, S800, S1000	3P、4P	71.5	74	25.2	16.2
H630, L630 H800, L800	3P、4P	71.5	111	25.2	16.2

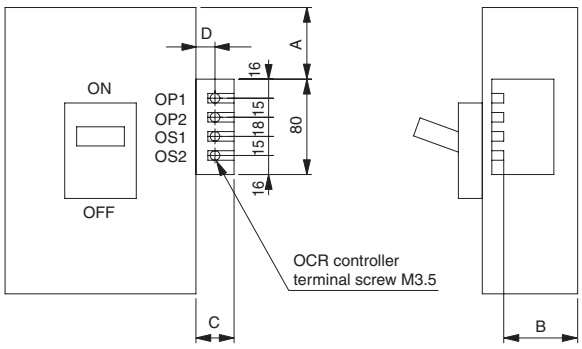

Note 1): Terminal screw tightening torque M3.5 ··· 0.88 – 1.18N·m
2): Connectable wire ····· 2.0mm² (max.)

● OCR controller separate outline drawing

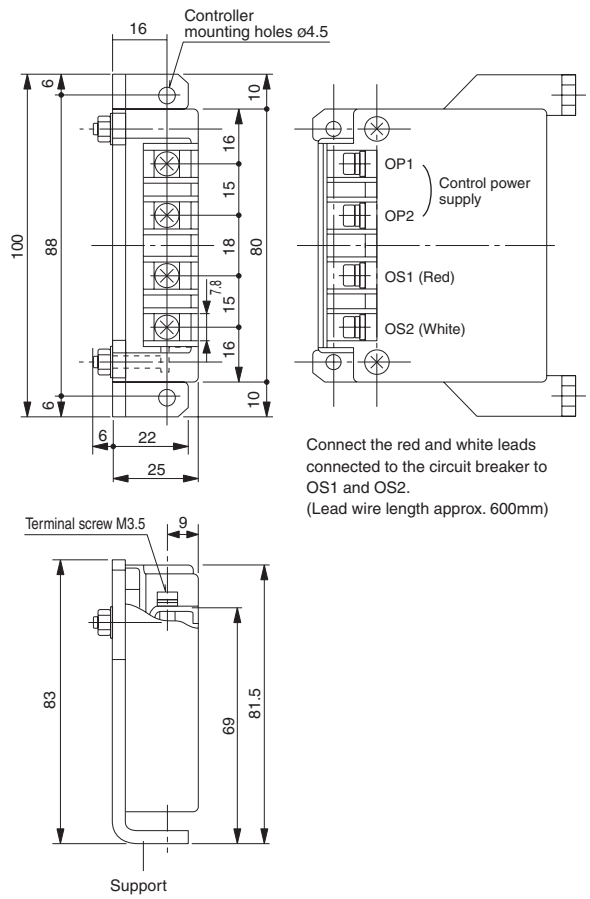

Connect the red and white leads connected to the circuit breaker to OS1 and OS2.
(Lead wire length approx. 600mm)

11 Circuit Breaker for Special Environments

Standard circuit breakers are manufactured based on the <standard usage conditions>.
If you intend to use a circuit breaker in an environment that differs from these conditions, we will manufacture a circuit breaker for the special environment upon request. Please specify this when ordering.

<Standard usage conditions>

- **Operating ambient temperature** ··· Within the range of –10°C to 40°C. When using in high temperature conditions exceeding 40°C, reduce the current used. However, the average value over 24 hours should not exceed 35°C.
  50°C ····· Approx. 90%
  60°C ····· Approx. 70%
- **Relative humidity** ····· 85% or less, no condensation.
- **Altitude** ····· 2000m or less
- **Atmosphere** ····· No excess water vapour, oil vapour, smoke, dust, salt, or corrosive substances, etc. Atmosphere without condensation or freezing due to sudden temperature changes.

Circuit Breaker for Special Environments	Specification	Nameplate display *
Low temperature treatment Note ①	A circuit breaker designed for use in cold areas. The usage conditions are −40°C for storage and −20°C for use. The operating characteristics of the low temperature circuit breaker are adjusted to 40°C (45°C) so the characteristics change at low temperatures. The usage environment must have no sudden temperature changes and no condensation or freezing.	**PROOFED FOR LOW TEMPERATURE** STORAGE −40°C or higher OPERATION −20°C or higher
Fungus-moisture proofing [Tropical treatment product]	In high temperature and high humidity conditions, the dielectric strength and other electrical performance may deteriorate. This is a circuit breaker with tropical treatment that uses a special surface treatment and special materials to allow use under these conditions. The usage conditions are temperature 60°C or less, humidity 95% or less. However, the product must be in a constant humidity environment with no condensation due to sudden temperature changes, etc.	**FUNGUS-MOISTURE PROOFING**
Anti-corrosion treatment	When using a circuit breaker in an atmosphere with a large amount of corrosive gas or salt, it should be placed inside an anti-corrosion structure box. However, in places where the effects of corrosive gas are relatively small, as a simple method, this increased corrosion-resistance circuit breaker with a special surface treatment that has high corrosion resistance may be used.	**CORROSION RESISTING**

Notes:
① : Electric operation devices cannot be used.
② : Compatible circuit breakers are limited. Please ask whether the model is compatible before placing your order.

5 Mounting and Connection

1 Type of connections and mountings 5-2
List of connecting type 5-2
Connecting parts 5-6
Plug-in for switchboards (Plug-in) (PM) 5-10
2 Compression terminals 5-12
3 Terminal screw sizes and standard torques 5-14
4 Insulation distance from the line side 5-18
5 Lists of breaker mounting screws 5-20
6 Effect of mounting angle 5-21
7 Close fitting mounting 5-22
8 Reverse connection 5-23

List of Connecting Types

Connecting types (Abbreviation)		Front-connected (FC)			Rear-connected (RC)		
		For compression terminals/flat bars	With extension bars	With cable clamps	Flat bar studs		
					Stud can be turned 45° or 90°	Stud can be tured 90°	Fixed
Outer view / Breaker		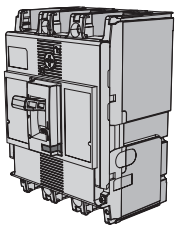	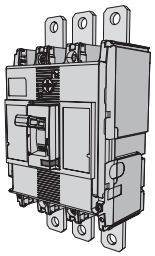	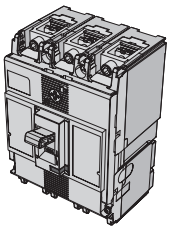	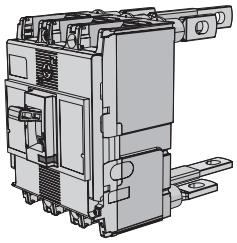		
Moulded Case Circuit Breakers	PE30-NF/NN, PS30-NF, PE50-NF/NN, PS50-NF, PE60-NF, PS60-NF, PE125-NF/NN	◉	○ ⑥	—	—	—	○ ⑨
	S50-SF, S125-SF, S125-SN	◉	○ ⑥	—	—	—	○ ⑨
	PS50-PF, PS125-NF/PF/NM/NN, PS125-NE/PE	◉	○ ⑥	△	○	—	—
	S100-GF, S125-GF	◉	○	△	○	—	—
	H100-NF, H125-NF, H225-NF	◉	○ ⑥	△	○	—	—
	H250-NF, L250-NF, H225-NE	◉	○ ⑥	△	○	—	—
	L100-NF, L125-NF, L225-NF	◉	○ ⑥	△	○	—	—
	E250-SF, S250-SF, S250-SN	◉	○ ⑥	△	○	—	—
	PS250-PF/NN, PS250-NE/PE	◉	○ ⑥	△	○	—	—
	S250-SM	◉	○ ⑥	—	○	—	—
	E400-NF	◉	○	△	○	—	—
	PS400-CF/NF/GF/NN, PS400-NE/GE	◉	○	△	○	—	—
	PH400-CF, PH400-CE	◉	○	△	○	—	—
	H400-NE, L400-NE	◉	○	△	○	—	—
	PS630-CF/NF/GF/NN, PS630-NE/GE	—	◉	△	○	—	—
	S630-CF/NF/NE/GN	—	◉	△	—	○	—
	PH630-CF, PH630-CE	—	◉	△	○	—	—
	S800-CF/NF/RF/PF, S800-NE/RE/PE/NN	—	◉	—	—	○	—
	H630-NE, L630-NE, H800-NE, L800-NE	—	◉	—	—	○	—
	S1000-CE/NN	—	◉	—	—	—	○ ⑦
	PE50-NFZ, PS50-NFZ, PE125-NFZ	◉	○ ⑥	—	—	—	○ ⑨
	ZAS125-SF	◉	○ ⑥	—	—	—	○ ⑨
	ZAS50-GF, ZAS100-GF, ZAS125-GF	◉	○ ⑥	△	○	—	—
	ZAE250-SF, ZAS250-SF	◉	○ ⑥	—	○	—	—
	ZAS225-GF, ZAS250-GF	◉	○ ⑥	△	○	—	—
	ZAE400-NF, ZAS400-NF/GF	◉	○	△	○	—	—
	ZAS630-CF/NF	—	◉	△	—	○	—
	ZAS800-CF/NF	—	◉	—	—	○	—
	PE50-NFN, PE125-NFN	◉	○ ⑥	—	—	—	—
	NS125-SF	◉	○ ⑥	—	—	—	—
	NE250-SF, NS250-SF, NE400-NF, NS400-NF	◉	○ ⑥	—	—	—	—
	NS630-NF, NS800-NF	—	◉	—	—	—	—
Earth Leakage Circuit Breakers	PZE30-NF, PZS30-NF, PZE50-NF, PZS50-NF, PZE60-NF, PZS60-NF, PZE125-NF	◉	○ ⑥	—	—	—	○ ⑨
	ZS50-SF, ZS100-SM, ZS125-SF	◉	○ ⑥	—	—	—	○ ⑨
	ZE250-SF, ZS250-SF/SM	◉	○ ⑥	—	○	—	—
	ZE400-NF	◉	○	△	○	—	—
	ZS100-GF, ZS125-GF	◉	○ ⑥	△	○	—	—
	ZS225-GF, ZS250-GF, ZS400-NF/GF	◉	○ ⑥	△	○	—	—
	PZE50-NFN, PZE125-NFN	◉	○ ⑥	—	—	—	—
	ZNS125-SF	◉	○ ⑥	—	—	—	—
	ZNE250-SF, ZNS250-SF	◉	○ ⑥	—	—	—	—
	ZNE400-NF, ZNS400-NF	◉	○	—	—	—	—
	ZS630-CF/NF	—	◉	△	—	○	—
	ZS800-CF/NF	—	◉	—	—	○	—
Remarks		• Connect compression terminals or flat bars directly to breaker terminals.	• Extension bars are attached to breaker terminals. Connect compression terminals or flat bars to the extension bars.	• Cable clamps are attached to breaker terminals. Connect wires directly to cable clamps.	• Flat bar studs will be factory installed in the horizontal position unless otherwise specified. • Flat bar studs in the vertical position are available on request. Please select a position code from those shown in the table below:		

Position code	Position of flat bar studs	
	Line side	Load side
RC-A	Vertical	Horizontal
RC-B	Horizontal	Vertical
RC-C	Vertical	Vertical
RC-D	Horizontal	Horizontal

∗ See pages 5-14 to 5-17 for dimensions and tightening torques of terminal screws.

Notes: ① Except 4-pole breakers.
② Please refer to Chapter 10 for details.
③ Please order the DIN rail adapter separately.
④ 2-pole products are not available.
⑤ 4-pole products are not available.
⑥ For the extension bars, please place the order separately in parts.
⑦ Only vertical position.
⑨ Horizontal position is standard. Vertical position is a special specification.
⑫ PH630-CE is not available.
PH630-CF is only available for 500A.

	Plug-in (PM)			Flush-mounted (FP)	Draw-out type (DR)	*TemPlug* (PG) ②	DIN rail mount
	For switchboards		For distribution boards ①	Flat bar studs			
	PMB (High-performance)	PMC (Standard)	PMD				
	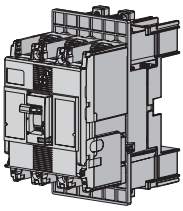	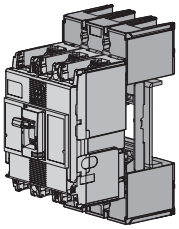	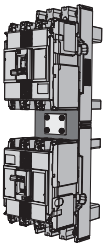	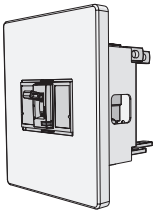	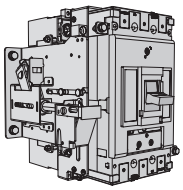	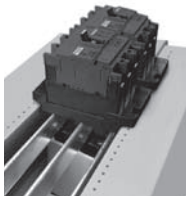	
	—	○ ④	○	○ ⑨	—	—	○ ③④
	—	○ ④⑤	○ ⑤	○ ⑨	—	○ ⑤	○ ③④
	○ ④⑩	○ ⑤	○ ④⑤	○	—	○ ⑤	○ ③④
	○ ⑪	○ ④⑤	○ ④⑤	○	—	○ ⑤	○ ③④
	○ ⑪	○ ⑤	—	○	—	▲ ⑤	—
	—	—	—	○	—	—	—
	○ ⑪	○ ⑤	—	○	—	—	—
	—	○ ⑤	—	○	—	○ ⑤	—
	○ ⑩	○ ⑤	—	○	▲	○ ⑤	—
	—	—	—	○	—	○ ⑤	—
	—	—	—	○	—	○	—
	○ ⑩	○ ⑤	—	○	▲	○ ⑤	—
	○ ⑩	○ ⑤	—	○	▲	▲ ⑤	—
	○ ⑪	○ ⑤	—	○	—	—	—
	○ ⑩	○ ⑤	—	○	▲	○ ⑤⑬	—
	○ ⑪	○ ⑤	—	○	▲	○ ⑤	—
	○ ⑩	○ ⑤	—	○	▲	▲ ⑤⑫	—
	○ ⑪	○ ⑤	—	○	▲	—	—
	○ ⑪	○ ⑤	—	○	—	—	—
	—	—	—	○ ⑦	—	—	—
	—	—	—	○ ⑨	—	—	—
	—	—	—	○ ⑨	—	○	○ ③
	—	—	—	○	—	○ ⑤	○ ③
	—	—	—	○	—	○	—
	—	—	—	○	—	○ ⑤	—
	—	—	—	○	—	○ ⑤	—
	—	—	—	○	—	○	—
	—	—	—	○	—	—	—
	—	—	—	—	—	—	○ ③
	—	—	—	—	—	—	○ ③
	—	—	—	—	—	—	—
	—	—	—	—	—	—	—
	—		—	○ ⑨	—	—	○ ③
	—	—	—	○ ⑨	—	○	○ ③
	—	—	—	○	—	○	—
	—	—	—	○	—	○	—
	—	—	—	○	—	○ ⑤	○ ③
	—	—	—	○	—	○ ⑤	—
	—	—	—	—	—	—	○ ③
	—	—	—	—	—	—	○ ③
	—	—	—	—	—	—	—
	—	—	—	—	—	—	—
	—	—	—	○	—	○	—
	—	—	—	○	—	—	—
	⑩If you try to remove the circuit breaker while it is ON, it will automatically TRIP. ⑪High-performance models have a safety mechanism that prevents them from being mounted or removed as long as they are in the ON state. ・Models meeting protection grade IP20 are available as options. IEC 60529 specifies that IP20-compliant devices be designed and constructed so that live parts of the devices cannot be touched by hand. When ordering the products, please specify as "IP20 applied products".		・Plug-in type with front connection suitable for the small depth.	・Fix the circuit breaker to the panel using the attached mounting frame. ・Use the flat bar studs in the same manner as for rear-connected breakers. ・The plate is painted in Munsell 5Y 7/1.	・To make connection, push the breaker into the draw-out cradle already wired to the main and control circuits. The draw-out cradle has two positions "Connected" and "Isolated". ・The breakers have a safety mechanism that prevents them from being mounted or removed as long as they are in the ON state. ・Models meeting protection grade IP20 are available as options. IEC 60529 specifies that IP20-compliant devices be designed and constructed so that live parts of the devices cannot be touched by hand. When ordering the products, please specify as "IP20 applied products".	・Simply plugging *TemPlug* onto the main busbars in a switchboard completes the connection of the breaker to a power distribution line. Use plug-in base mounting screws to secure the breaker. Direct coupling of the plug-in base to the main busbars reduces the lead time involved in completing a power distribution system. ・If the frame size or rated current of the breakers is changed, all you have to do is to replace the *TemPlug*.	・Can be mounted on an IEC 35mm rail.

⑬ PS630-NE/GE are not available. PS630-CF/NF/GF/NN are only available for 500A.

◉ : Standard. This configuration used unless otherwise specified.
○ : Optional standard. Specify when ordering.
▲ : Semi-standard.

△ : Custom-built product. Please contact us for details.
— : "no" or "not available".

1 Type of connections and mountings

List of Connecting Types

Connecting types (Abbreviation)		Front-connected (FC)		Rear-connected (RC)		
				Flat bar studs	Bolt studs	
		For compression terminals/flat bars	With extension bars	Fixed ①		
Outer view / Breaker						
MCCB	E30-NM, S30-NM, E50-NM, S50-NM, E100-NM	◉	○ ⑦	○ ⑥	—	
MCCB	TL-1000NE, TL-1200NE	—	◉	○ ②	—	
MCCB	S1250-NE, S1250-GE, S1250-NN	—	◉	○ ②	—	
MCCB	S1600-NE, S1600-NN	—	○	◉ ③	—	
MCCB	XS2000NE, XS2000NN	—	○	◉ ③	—	
MCCB	XS2500NE, XS2500NN, XS3200NE, XS3200NN	—	—	◉ ③	—	
ELCB	ZE30-NM, ZS30-NM, ZE50-NM, ZS50-CM, ZE100-NM	◉	○ ⑦	○ ⑥	—	
Remarks		・Connect compression terminals directly to breaker terminals.	・Extension bars are attached to breaker terminals. Connect compression terminals or flat bars to the extension bars.			

＊See pages 5-14 to 5-17 for dimensions and tightening torques of terminal screws.

Notes: ① Breakers are mounted on angles.
② Flat bar studs will be factory installed in the horizontal position unless otherwise specified. If vertical installation is required, please state when ordering.

Position code	Position of flat bar studs	
	Line side	Load side
RC-A	Vertical	Horizontal
RC-B	Horizontal	Vertical
RC-C	Vertical	Vertical
RC-D	Horizontal	Horizontal

③ Vertical installation only.
④ The breakers can be installed on the panel door using mounting frame supplied as standard.
⑤ The breakers can be installed on the mounting angle as well as Rear-connected breakers.
⑥ Flat bar studs will be factory installed in the horizontal position unless otherwise specified. Flat bar studs in the vertical position are available on request.
⑦ For the extension bars, please place the order separately in parts.

	Plug-in (PM) For switchboards	Draw-out type (DR)		Flush-mounted (FP)	DIN rail mount
	PMC (Standard)	Two-position type	Three-position type	Flat bar studs	
				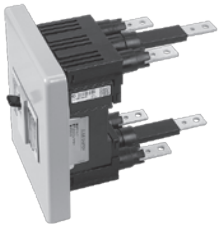	
	—	—	—	○ ⑥	◉
	○	▲	—	○ ②④	—
	○	▲	—	○ ②④	—
	—	—	○	○ ③④	—
	—	—	○	○ ③⑤	—
	—	—	—	○ ③⑤	—
	—	—	—	○ ⑥	◉
	• To make connection, push the breaker into the plug-in base already wired to the main and control circuits. Use breaker mounting screws to secure the breaker. • Models meeting protection grade IP20 are available as options. IP20 refers to the protection grade specified under IEC 60529 that states that IP20-compliant devices be designed and constructed so that live parts of the devices cannot be touched by hand.	• To make connection, push the breaker into the draw-out cradle already wired to the main and control circuits. The draw-out cradle has two positions “Connected” and “Isolated”. • The breakers are fitted with a safety trip. If an attempt is made to remove the breakers while ON position it will automatically trip. • Models meeting protection grade IP20 are available as options. IP20 refers to the protection grade specified under IEC 60529 that states that IP20-compliant devices be designed and constructed so that live parts of the devices cannot be touched by hand. • The auxiliary circuit is connected or isolated automatically through the auxiliary circuit terminals of a plug-in breaker. (When the motor operator is mounted, the auxilary circuit is connected or isolated manually.)	• To make connection, push the breaker into the draw-out cradle already wired to the main and control circuits. The draw-out cradle has three positions “Connected”, “Test” and “Isolated”. • The breakers are fitted with a safety trip. If an attempt is made to remove the breakers while ON position it will automatically trip. • Safety shutters are available as option which automatically cover the live parts on the cradle side in the isolated position. • The auxiliary circuit is connected or isolated automatically. Connected on “CONN” and “TEST” position. Isolated on “ISOLATED” position. • We can also manufacture a design with a manual connector upon request.	• The plate is painted in Munsell 5Y 7/1.	

◉ : Standard. This configuration used unless otherwise specified.
○ : Optional standard. Specify when ordering.
▲ : Semi-standard.
△ : Custom-built product. Please contact us for details.
— : “no” or “not available”.

Connecting parts

There are the following connecting/mounting hardware available as options:

1. Extension bars for front conection

Type	Number of poles	Shape	Applicable breakers		Min order qty ①	Constituent parts		
			Moulded Case Circuit Breakers	Earth Leakage Circuit Breakers		Extension bar	Screw B	Screw C
T2FB053B	3	Straight extension bars	E30-NM, S30-NM, E50-NM, S50-NM,	ZE30-NM, ZS30-NM, ZE50-NM, ZS50-CM	1	6	—	—
T2FB063B	3	Straight extension bars	E100-NM	ZE100-NM	1	6	—	—
T2FB12L2SB	2	Straight extension bars	PE30-NF/NN, PS30-NF, PE50-NF/NN, PS50-NF, PE60-NF, PS60-NF, PE125-NF/NN	———	1	4	4	4
T2FB12L3SB	3		PE30-NF/NN, PS30-NF, PE50-NF/NN/NFZ/NFN, PS50-NF/NFZ, PE60-NF, PS60-NF, PE125-NF/NN/NFZ/NFN	PZE30-NF, PZS30-NF, PZE50-NF/NFN, PZS50-NF, PZE60-NF, PZS60-NF, PZE125-NF/NFN		6	6	6
T2FB12L2SB	2	Straight extension bars	S50-SF, S125-SF	———	1	4	4	4
T2FB12L3SB	3		S50-SF, S125-SF, S125-SN, ZAS125-SF, NS125-SF	ZS50-SF, ZS125-SF, ZS100-SM, ZNS125-SF		6	6	6
T2FB12L4SB	4		S50-SF, S125-SF, S125-SN	———		8	8	8
TPFB162SB	2	Straight extension bars	PS50-PF, PS125-NF/PF	———	1	4	4	4
TPFB163SB	3		PS50-PF, PS125-NF/PF/NN, PS125-NE/PE	———		6	6	6
TPFB164SB	4		PS50-PF, PS125-NF/PF/NN, PS125-NE/PE	———		8	8	8
T2FB122B	2	Straight extension bars	S100-GF, S125-GF	———	1	4	4	4
T2FB123B	3		S100-GF, S125-GF, ZAS50-GF, ZAS100-GF, ZAS125-GF	ZS100-GF, ZS125-GF		6	6	6
T2FB124B	4		S100-GF, S125-GF, ZAS50-GF, ZAS100-GF, ZAS125-GF			8	8	8
T2FB25L3WB	3	Spread extension bars	E250-SF, S250-SF, S250-SM, S250-SN, ZAE250-SF, ZAS250-SF, NE250-SF, NS250-SF	ZE250-SF, ZS250-SF, ZS250-SM, ZNE250-SF, ZNS250-SF	1	6	6	6
T2FB25L4WB	4		S250-SF, S250-SN	———		8	8	8
T2FB25L2SB	2	Straight extension bars	E250-SF, S250-SF	———	1	4	4	4
T2FB25L3SB	3		E250-SF, S250-SF, S250-SM, S250-SN, ZAE250-SF, ZAS250-SF, NE250-SF, NS250-SF	ZE250-SF, ZS250-SF, ZS250-SM, ZNE250-SF, ZNS250-SF		6	6	6
T2FB25L4SB	4		S250-SF, S250-SN	———		8	8	8
T2FB25L3WB	3	Spread extension bars	PS250-PF/NN, PS250-NE/PE	———	1	6	6	6
T2FB25L4WB	4		PS250-PF/NN, PS250-NE/PE	———		8	8	8
T2FB25L3SB	3	Straight extension bars	PS250-PF/NN, PS250-NE/PE	———	1	6	6	6
T2FB25L4SB	4		PS250-PF/NN, PS250-NE/PE	———		8	8	8
T2FB253B	3	Spread extension bars	H100-NF, H125-NF, H225-NF, H225-NE, H250-NF, L100-NF, L125-NF, L225-NF, L250-NF, ZAS225-GF, ZAS250-GF	ZS225-GF, ZS250-GF	1	6	6	6
T2FB254B	4	Straight extension bars	H100-NF, H125-NF, H225-NF, H225-NE, H250-NF, L100-NF, L125-NF, L225-NF, L250-NF, ZAS225-GF, ZAS250-GF			8	8	8
T2FB403B	3	Spread extension bars	PS400-CF/NF/GF/NN, PS400-NE/GE, PH400-CF, PH400-CE	———	1	6	6	6
T2FB404B	4		PS400-CF/NF/GF/NN, PS400-NE/GE, PH400-CF, PH400-CE	———		8	8	8
T2FB403B	3	Spread extension bars	H400-NE, L400-NE, ZAE400-NF, ZAS400-NF/GF, NE400-NF, NS400-NF, E400-NF	ZE400-NF, ZS400-NF/GF, ZNE400-NF, ZNS400-NF	1	6	6	6
T2FB404B	4		H400-NE, L400-NE, ZAS400-NF/GF	ZS400-NF/GF		8	8	8

●See page 5-16 for screws B and C.

Note: ① The min order qty is one unit on the line side and one on the load side. Please specify it separately if you need 1/2 of either the line side or the load side.

2. Flat bar stud for rear connection

Type	Number of poles	Connection ①	Applicable breakers		Min order qty	Constituent parts				
			Moulded Case Circuit Breakers	Earth Leakage Circuit Breakers		Stud unit	Unit mounting screw	Stud bar	Screw D	Screw E
T2RP053A	3	Vertical – Horizontal	E30-NM, S30-NM, E50-NM, S50-NM	ZE30-NM, ZS30-NM, ZE50-NM, ZS50-CM	1	2	4	②	6	6
T2RP053C		Vertical – Vertical								
T2RP053D		Horizontal – Horizontal								
T2RP063A	3	Vertical – Horizontal	E100-NM	ZE100-NM	1	2	4	②	6	6
T2RP063C		Vertical – Vertical								
T2RP063D		Horizontal – Horizontal								
TPRP052KB	2	Horizontal – Horizontal	PE30-NF/NN, PS30-NF, PE50-NF/NN, PS50-NF	———	1	—	—	4	4	4
TPRP053KB	3	Horizontal – Horizontal	PE30-NF/NN, PS30-NF, PE50-NF/NN/NFZ, PS50-NF/NFZ	PZE30-NF, PZS30-NF, PZE50-NF, PZS50-NF				6	6	6
TPRP122KB	2	Horizontal – Horizontal	PE60-NF, PS60-NF, PE125-NF/NN	———	1	—	—	4	4	4
TPRP123KB	3	Horizontal – Horizontal	PE60-NF, PS60-NF, PE125-NF/NN/NFZ	PZE60-NF, PZS60-NF, PZE125-NF				6	6	6
T2RP05L2S	2	Horizontal – Horizontal	S50-SF, S125-SF (15-50A)	———	1	—	—	4	4	4
T2RP05L3S	3	Horizontal – Horizontal						6	6	6
T2RP05L4S	4	Horizontal – Horizontal						8	8	8
T2RP12L2S	2	Horizontal – Horizontal	S125-SF (60-125A)	———	1	—	—	4	4	4
T2RP12L3S	3	Horizontal – Horizontal	S125-SF (60-125A), S125-SN					6	6	6
T2RP12L4S	4	Horizontal – Horizontal						8	8	8
T2RP05L3Z	3	Horizontal – Horizontal	ZAS125-SF (15-50A)	ZS50-SF, ZS125-SF (15-50A), ZS100-SM (16-45A)	1	—	—	6	6	6
T2RP12L3Z	3	Horizontal – Horizontal	ZAS125-SF (60-125A)	ZS125-SF (60-125A), ZS100-SM (60-100A)	1	—	—	6	6	6
TPRP162SB	2	*	PS50-PF, PS125-NF/PF	———	1	—	—	4	4	4
TPRP163SB	3		PS50-PF, PS125-NF/PF/NN, PS125-NE/PE					6	6	6
TPRP164SB	4		PS50-PF, PS125-NF/PF/NN, PS125-NE/PE					8	8	8
T2RP122S	2	*	S100-GF, S125-GF	———	1	—	—	4	4	4
T2RP123S	3		S100-GF, S125-GF, ZAS50-GF, ZAS100-GF, ZAS125-GF	ZS100-GF, ZS125-GF				6	6	6
T2RP124S	4							8	8	8
T2RP253S	3	*	E250-SF, S250-SF, S250-SM, S250-SN, ZAE250-SF, ZAS250-SF	ZE250-SF, ZS250-SF, ZS250-SM	1	—	—	6	6	6
T2RP254S	4		S250-SF, S250-SN	———				8	8	8
T2RP253S	3	*	ZAS225-GF, ZAS250-GF	ZS225-GF, ZS250-GF	1	—	—	6	6	6
T2RP254S	4							8	8	8
T2RP253S	3	*	PS250-PF/NN, PS250-NE/PE	———	1	—	—	6	6	6
T2RP254S	4							8	8	8
T2RP253L	3	*	H100-NF, H125-NF, H225-NF, H225-NE, H250-NF, L100-NF, L125-NF, L225-NF, L250-NF	———	1	—	—	6	6	6
T2RP254L	4							8	8	8
T2RP403S	3	*	PS400-CF/NF/GF/NN, PS400-NE/GE, PH400-CF, PH400-CE	———	1	—	—	6	6	6
T2RP404S	4		PS400-CF/NF/GF/NN, PS400-NE/GE, PH400-CF, PH400-CE					8	8	8
T2RP403S	3	*	E400-NF, ZAE400-NF, ZAS400-NF/GF	ZE400-NF, ZS400-NF/GF	1	—	—	6	6	6
T2RP404S	4		ZAS400-NF/GF	ZS400-NF/GF				8	8	8
T2RP463S	3	*	PS630-CF/NF/GF/NN, PS630-NE/GE, PH630-CF, PH630-CE	———	1	—	—	6	6	6
T2RP464S	4		PS630-CF/NF/GF/NN, PS630-NE/GE, PH630-CF, PH630-CE					8	8	8
T2RP403L	3	*	H400-NE, L400-NE	———	1	—	—	6	6	6
T2RP404L	4							8	8	8

● See page 5-17 for screws D and E.

Note:

① In the case of "vertical-horizontal," "vertical-vertical," or "horizontal-horizontal," the orientation cannot be changed. In the case of "*", the studs can be rotated to four angular positions: 0 (horizontal), 45, 90 (vertical) and 135 degrees.

② The stud bar is integrated with the stud unit.

3. Plug-in base

PMB Plug-in base for switchboards (High-performance)

Type	Number of poles	IP20	Applicable breakers: Moulded Case Circuit Breakers	Min order qty	Constituent parts: Plug-in base	Constituent parts: Nut J
TPPM12B3	3	Non	PS50-PF, PS125-NF/PF/NN, PS125-NE/PE	1	1	6
TPPM12B4	4				1	8
T2PM12B2	2		S100-GF, S125-GF	1	1	4
T2PM12B3	3				1	6
T2PM12B4	4				1	8
T2PM25B3	3		PS250-PF/NN, PS250-NE/PE	1	1	6
T2PM25B4	4				1	8
T2PM25B3	3		H100-NF, H125-NF, H225-NF, L100-NF, L125-NF, L225-NF	1	1	6
T2PM25B4	4				1	8
TPPM63B3	3		PS400-CF/NF/GF/NN, PS400-NE/GE, PH400-CF, PH400-CE	1	1	6
TPPM63B4	4		PS400-CF/NF/GF/NN, PS400-NE/GE, PH400-CF, PH400-CE		1	8
T2PM40B3	3		H400-NE, L400-NE	1	1	6
T2PM40B4	4				1	8
TPPM63B3	3		PS630-CF/NF/GF/NN, PH630-CF	1	1	6
TPPM63B4	4		PS630-CF/NF/GF/NN, PH630-CF		1	8
T2PM80B3	3		S630-CF/NF/NE/GN, S800-CF/NF/RF/PF/NE/RE/PE/NN, H630-NE, L630-NE, H800-NE, L800-NE	1	1	6
T2PM80B4	4				1	8
TPPM12P3	3	Compliant	PS50-PF, PS125-NF/PF/NN, PS125-NE/PE	1	1	6
TPPM12P4	4				1	8
T2PM12P2	2		S100-GF, S125-GF	1	1	4
T2PM12P3	3				1	6
T2PM12P4	4				1	8
T2PM25P3	3		PS250-PF/NN, PS250-NE/PE	1	1	6
T2PM25P4	4				1	8
T2PM25P3	3		H100-NF, H125-NF, H225-NF, L100-NF, L125-NF, L225-NF	1	1	6
T2PM25P4	4				1	8
TPPM63P3	3		PS400-CF/NF/GF/NN, PS400-NE/GE, PH400-CF, PH400-CE	1	1	6
TPPM63P4	4		PS400-CF/NF/GF/NN, PS400-NE/GE, PH400-CF, PH400-CE		1	8
T2PM40P3	3		H400-NE, L400-NE	1	1	6
T2PM40P4	4				1	8
TPPM63P3	3		PS630-CF/NF/GF/NN, PH630-CF	1	1	6
TPPM63P4	4		PS630-CF/NF/GF/NN, PH630-CF		1	8
T2PM80P3	3		S630-CF/NF/NE/GN, S800-CF/NF/RF/PF/NE/RE/PE/NN, H630-NE, L630-NE, H800-NE, L800-NE	1	1	6
T2PM80P4	4				1	8

PMC Plug-in base for switchboards (Standard)

Type	Number of poles	IP20	Applicable breakers: Moulded Case Circuit Breakers	Min order qty	Constituent parts: Plug-in base	Constituent parts: Nut J
T2PM12LT3	3	Non	PE30-NF/NN, PS30-NF, PE50-NF/NN, PS50-NF, PE60-NF, PS60-NF, PE125-NF/NN	1	1	6
TPPM12E2	2		PS50-PF, PS125-NF/PF	1	1	4
TPPM12E3	3		PS50-PF, PS125-NF/PF/NN, PS125-NE/PE	1	1	6
T2PM12E3	3		S100-GF, S125-GF	1	1	6
T2PM12LT3	3		S50-SF, S125-SF/SN	1	1	6
T2PM25LE3	3		E250-SF, S250-SF, S250-SN	1	1	6
T2PM25LE4	4		S250-SF, S250-SN	1	1	8
T2PM25LE3	3		PS250-PF/NN, PS250-NE/PE	1	1	6
T2PM25E3	3		H100-NF, H125-NF, H225-NF, L100-NF, L125-NF, L225-NF	1	1	6
T2PM40E3	3		PS400-CF/NF/GF/NN, PS400-NE/GE, PH400-CF, PH400-CE	1	1	6
T2PM40E3	3		H400-NE, L400-NE	1	1	6
T2PM40E3	3		PS630-CF/NF/GF/NN, PH630-CF	1	1	6
T2PM80E3	3		S630-CF/NF/NE/GN, S800-CF/NF/RF/PF/NE/RE/PE/NN	1	1	6
T2PM80M3	3		H630-NE, L630-NE, H800-NE, L800-NE	1	1	6
T2PMX3E3	3		S1250-NE/GE/NN	1	1	6
XDM8	3		TL-1000NE, TL-1200NE	1	1	6
T2PM12LC3	3	Compliant ②	PE30-NF/NN, PS30-NF, PE50-NF/NN, PS50-NF, PE60-NF, PS60-NF, PE125-NF/NN	1	1	6
TPPM12C2	2		PS50-PF, PS125-NF/PF	1	1	4
TPPM12C3	3		PS50-PF, PS125-NF/PF/NN, PS125-NE/PE	1	1	6
T2PM12C3	3		S100-GF, S125-GF	1	1	6
T2PM12LC3	3		S50-SF, S125-SF/SN	1	1	6
T2PM25LC3	3		E250-SF, S250-SF, S250-SN	1	1	6
T2PM25LC4	4		S250-SF, S250-SN	1	1	8
T2PM25LC3	3		PS250-PF/NN, PS250-NE/PE	1	1	6
T2PM25C3	3		H100-NF, H125-NF, H225-NF, L100-NF, L125-NF, L225-NF	1	1	6
T2PM40C3	3		PS400-CF/NF/GF/NN, PS400-NE/GE, PH400-CF, PH400-CE	1	1	6
T2PM40C3	3		H400-NE, L400-NE	1	1	6
T2PM40C3	3		PS630-CF/NF/GF/NN, PH630-CF	1	1	6
T2PM80C3	3		S630-CF/NF/NE/GN, S800-CF/NF/RF/PF/NE/RE/PE/NN ①	1	1	6
T2PM80N3	3		H630-NE, L630-NE, H800-NE, L800-NE ①	1	1	6
T2PMX3C3	3		S1250-NE/GE/NN	1	1	6

● See page 5-17 for nut J. Nut J is common to PMB and PMC.

Remarks: Normally the plug-in base should be ordered at the same time as the breaker body. However, please order it if you will connect the plug-in base in advance.

Note: ① An IP20 applied plug-in base requires a dedicated IP20 circuit breaker body. When ordering the circuit breaker body, please specify "IP20 applied product".

② If internal accessories are fitted in the circuit breaker, auxiliary circuit terminals for IP20 are required. Please specify "IP20 applied product" when ordering the circuit breaker body.

4. Flush-mounted (with flat bar studs)

Type	Number of poles	Connection ①	Applicable breakers		Min order qty	Constituent parts							
			Moulded Case Circuit Breakers	Earth Leakage Circuit Breakers		Flush plate ②	Flush-mounting frame	Stud unit	Frame mounting screw	Panel mounting screw	Bush	Screw F	Screw G
T2FP05A3B	3	Vertical – Horizontal	E30-NM, S30-NM, E50-NM, S50-NM	ZE30-NM, ZS30-NM, ZE50-NM, ZS50-CM	1	1	1	2 ④	4	—	4	6	6
T2FP05C3B		Vertical – Vertical											
T2FP05D3B		Horizontal – Horizontal											
T2FP06A3B	3	Vertical – Horizontal	E100-NM	ZE100-NM	1	1	1	2 ④	4	—	4	6	6
T2FP06C3B		Vertical – Vertical											
T2FP06D3B		Horizontal – Horizontal											
T2FP12LS2	2	Horizontal – Horizontal	PE30-NF/NN, PS30-NF, PE50-NF/NN, PS50-NF	———	1	1	1	— ⑤	4	4	—	—	—
T2FP12LS3	3	Horizontal – Horizontal	PE30-NF/NN, PS30-NF, PE50-NF/NN/NFZ, PS50-NF/NFZ	PZE30-NF, PZS30-NF, PZE50-NF, PZS50-NF							—	—	—
T2FP12LS2	2	Horizontal – Horizontal	PE60-NF, PS60-NF, PE125-NF/NN	———	1	1	1	— ⑤	4	4	—	—	—
T2FP12LS3	3	Horizontal – Horizontal	PE60-NF, PS60-NF, PE125-NF/NN/NFZ	PZE60-NF, PZS60-NF, PZE125-NF							—	—	—
T2FP12LS2	2	Horizontal – Horizontal	S50-SF, S125-SF	———	1	1	1	— ⑤	4	4	—	—	—
T2FP12LS3	3	Horizontal – Horizontal	S50-SF, S125-SF, ZAS125-SF, S125-SN	ZS50-SF, ZS125-SF, ZS100-SM							—	—	—
TPFP12S2	2	*	PS50-PF, PS125-NF/PF	———	1	1	1	— ⑤	2	4	—	—	—
TPFP12S3	3		PS50-PF, PS125-NF/PF/NN, PS125-NE/PE	———					4		—	—	—
TPFP12S4	4		PS50-PF, PS125-NF/PF/NN, PS125-NE/PE								—	—	—
T2FP12S2	2	*	S100-GF, S125-GF	———	1	1	1	— ⑤	2	4	—	—	—
T2FP12S3	3		S100-GF, S125-GF, ZAS50-GF, ZAS100-GF, ZAS125-GF	ZS100-GF, ZS125-GF					4		—	—	—
T2FP12S4	4										—	—	—
T2FP25S3	3	*	E250-SF, S250-SF, S250-SM, S250-SN, ZAE250-SF, ZAS250-SF	ZE250-SF, ZS250-SF, ZS250-SM	1	1	1	— ⑤	4	4	—	—	—
T2FP25S4	4		S250-SF, S250-SN	———							—	—	—
T2FP25S3	3	*	ZAS225-GF, ZAS250-GF	ZS225-GF, ZS250-GF	1	1	1	— ⑤	4	4	—	—	—
T2FP25S4	4										—	—	—
T2FP25S3	3	*	PS250-PF/NN, PS250-NE/PE	———	1	1	1	— ⑤	4	4	—	—	—
T2FP25S4	4										—	—	—
T2FP25L3	3	*	H100-NF, H125-NF, H225-NF, H225-NE, H250-NF, L100-NF, L125-NF, L225-NF, L250-NF	———	1	1	1	— ⑤	4	4	—	—	—
T2FP25L4	4										—	—	—
TPFP40S3	3	*	PS400-CF/NF/GF/NN, PS400-NE/GE, PH400-CF, PH400-CE	———	1	1	1	— ⑤	4	4	—	—	—
TPFP40S4	4		PS400-CF/NF/GF/NN, PS400-NE/GE, PH400-CF, PH400-CE								—	—	—
TPFP40S3	3	*	E400-NF, ZAE400-NF, ZAS400-NF/GF	ZE400-NF, ZS400-NF/GF	1	1	1	— ⑤	— ③	4	—	—	—
TPFP40S4	4		ZAS400-NF/GF	ZS400-NF/GF							—	—	—
TPFP40S3	3	*	PS630-CF/NF/GF/NN, PS630-NE/GE, PH630-CF, PH630-CE	———	1	1	1	— ⑤	4	4	—	—	—
TPFP40S4	4		PS630-CF/NF/GF/NN, PS630-NE/GE, PH630-CF, PH630-CE								—	—	—
TPFP40L3	3	*	H400-NE, L400-NE	———	1	1	1	— ⑤	— ③	4	—	—	—
TPFP40L4	4										—	—	—

● See page 5-17 for screws F and G.

Note:

① In the case of "vertical-horizontal," "vertical-vertical," or "horizontal-horizontal," the orientation cannot be changed. In the case of "*", the studs can be rotated to four angular positions: 0 (horizontal), 45, 90 (vertical) and 135 degrees.

② The flash plate is painted in Munsell 5Y 7/1.

③ Use the breaker mounting screws (supplied with the breaker) to secure the breaker in the flush-mounting frame.

④ The stud bar is integrated with the stud unit.

⑤ The stud bar is not provided as standard. Please order the flat bar stud for rear connection in page 5-7 separately.

Plug-in for switchboards (PM)

1. Plug-in base for switchboards

Standard (PMC)

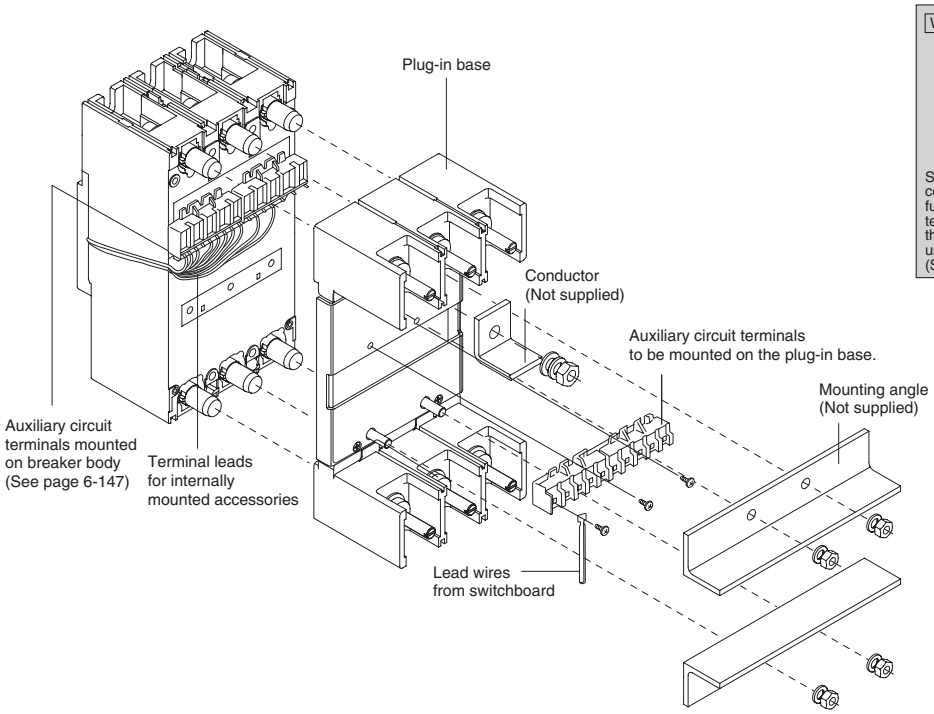

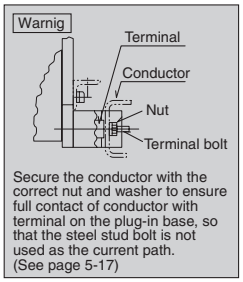

High-performance (PMB)

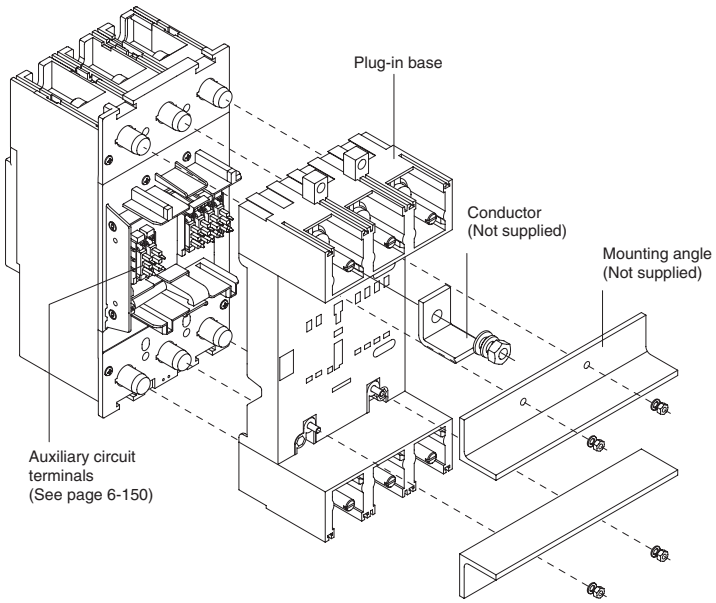

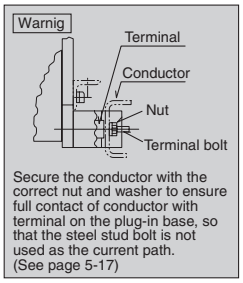

2. High-performance plug-in base connection method

Three types of mounting method are possible with the high-performance plug-in base PMB type.

Rear-connected

Mount to an angle or panel and connect with the main busbar at the rear.
The main busbar can be connected either externally or internally.

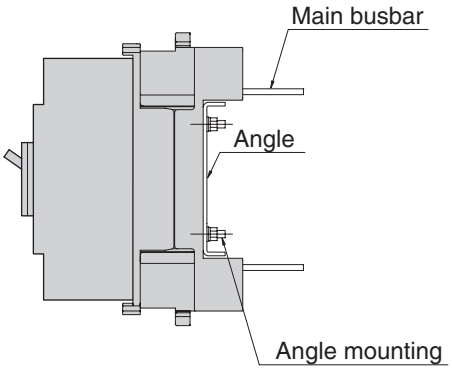

Angle mounting

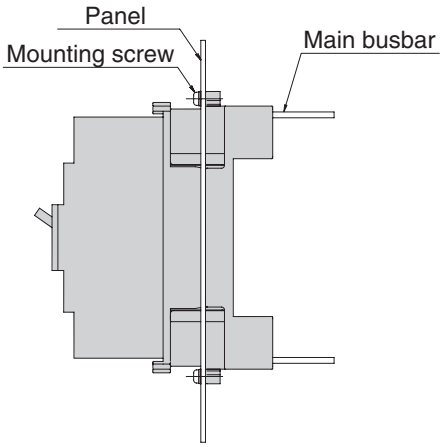

Front panel mounting

Front-connected

Attach to a panel and connect the main busbar to the extension bars from the front.
A plug-in base with extension bars is available as an option.

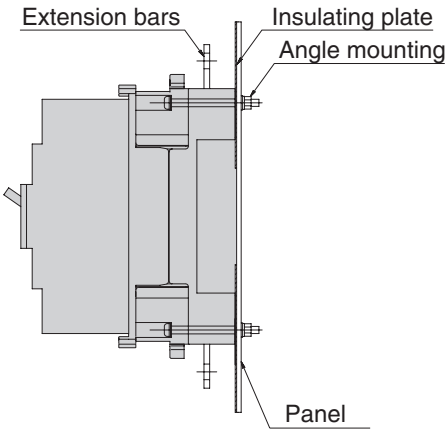

Rear panel mounting

3. High-performance plug-in base safety mechanism

The high-performance plug-in base PMB type is supplied with the following safety mechanism as standard.

Safety trip

If you try to remove the circuit breaker while it is ON, it will automatically TRIP.
See Chapter 2 for applicable models.

Safety lock

Since the breakers have a safety mechanism as standard that prevents them from being mounted or removed as long as they are in the ON state, they can be safely mounted or removed in non-energized state any time.
See Chapter 2 for applicable models.

Front connected type (without extension bar)

Frame size (A)	MCCB	ELCB	Rated current	Nominal wire size (mm²)									
				2	5.5	8	14	22	38	60	80	100	150
30, 50	E30-NM, S30-NM, PE30-NF/NN, PS30-NF	ZE30-NM, ZS30-NM, PZE30-NF, PZS30-NF		R2-5	R5.5-5	R8-5	R14-5	NTM CB22-5S AMP 33114					
	TB-5S, TB-5P, TB-5D (Load side)			R2-5	R5.5-5	R8-5	R14-5	NTM CB22-5S					
	TB-51C, TB-52C	TZ-51C, TZ-52C		R2-5	R5.5-5	JST8-5SC-9 AMP8-5A NTM8-5S							
		TZ30EC		R2-5	R5.5-5	R8-5	R14-5						
	E50-NM, S50-NM, PE50-NF/NN/NFZ/NFN, PS50-NF/NFZ	ZE50-NM, ZS50-CM, PZE50-NF/NFN, PZS50-NF		R2-5	R5.5-5	R8-5	R14-5	NTM CB22-5S AMP 33114					
	S50-SF	ZS50-SF		R2-5 (R2-6)	R5.5-5 (R5.5-6)	R8-5 (R8-6)	R14-5	NTM CB22-5S AMP 33114					
		TZ50EE		R2-5	R5.5-5	R8-5	R14-5						
	ZAS50-GF			R2-8	R5.5-8	R8-8	R14-8	R22-8	AMP 322870 JST 38-S8 NTK R38-8S NTM R38-8S	60-S8 Note ③ CB60-8			
60	PE60-NF, PS60-NF	PZE60-NF, PZS60-NF		R2-8	R5.5-8	R8-8	R14-8	R22-8					
100, 125		TZ100EC				R8-8	R14-8	R22-8	NTM R38-8S	NTM CB60-8			
	E100-NM	ZE100-NM	(60-125A)	R2-8	R5.5-8	R8-8	R14-8	JST 22-S8	JST 38-S8 NTM R38-8S	60-S8 Note ③			
	S125-SF, ZAS125-SF, NS125-SF	ZS125-SF, ZS100-SM, ZNS125-SF	(15-50A)	R2-5 (R2-6)	R5.5-5 (R5.5-6)	R8-5 (R8-6)	R14-5	NTM CB22-5S AMP 33114					
	S125-SF, S125-SN, ZAS125-SF, NS125-SF, PE125-NF/NN/NFZ/NFN	PZE125-NF/NFN	(60-125A)			R8-8	R14-8	R22-8	AMP 322870 JST38-S8 NTM R38-8S	NTM CB60-8 60-S8 Note ③			
	H100-NF, H125-NF, L100-NF, L125-NF, PS125-NF/NE/PF/PE/NN, ZAS100-GF, ZAS125-GF	ZS100-GF, ZS125-GF		R2-8	R5.5-8	R8-8	R14-8	R22-8	AMP 322870 JST 38-S8 NTK R38-8S NTM R38-8S	60-S8 Note ③ CB60-8			
225, 250	E250-SF, S250-SF, S250-SM/SN, H225-NF/NE, H250-NF, L225-NF, L250-NF, ZAE250-SF, ZAS225-GF, ZAS250-GF/SF, NE250-SF, NS250-SF, PS250-NE/PF/PE/NN	ZE250-SF, ZS225-GF, ZS250-GF/SF/SM, ZNE250-SF, ZNS250-SF							R38-8	R60-8	80-3BA Note ③ CB80-8	100-3BA Note ③ CB100-8	CB150-8
400	H400-NE, L400-NE, ZAE400-NF, ZAS400-NF/GF, NE400-NF, NS400-NF, E400-NF, PS400-CF/NF/NE/GF/GE/NN, PH400-CF/CE	ZE400-NF, ZS400-NF/GF, ZNE400-NF, ZNS400-NF							R38-10 Note ②	R60-10 Note ②	80-4B Note ②③ CB80-10 Note ②	100-4B Note ②③ CB100-10 Note ②	150-4B Note ②③ CB150-10 Note ②

Front connected type (with extension bar)

Frame size (A)	MCCB	ELCB	Nominal wire size (mm²)						
			38	60	80	100	150	200	325
225, 250	E250-SF, S250-SF, S250-SM/SN, H225-NF/NE, H250-NF, L225-NF, L250-NF, ZAE250-SF, ZAS225-GF, ZAS250-GF/SF, NE250-SF, NS250-SF, PS250-NE/PF/PE/NN	ZE250-SF, ZS225-GF, ZS250-GF/SF/SM, ZNE250-SF, ZNS250-SF	R38-10	R60-10	R80-10	R100-10	R150-10 Note ⑤ CB150-10 Note ⑥		
400	H400-NE, L400-NE, ZAE400-NF, ZAS400-NF/GF, NE400-NF, NS400-NF, E400-NF, PS400-CF/NF/NE/GF/GE/NN, PH400-CF/CE	ZE400-NF, ZS400-NF/GF, ZNE400-NF, ZNS400-NF	R38-12	R60-12	R80-12	R100-12	R150-12	R200-12	JST325-12
630	S630-CF/NF/NE/GN, PS630-CF/NF/NE/GF/GE/NN, PH630-CF/CE, H630-NE, L630-NE, ZAS630-CF/NF, NS630-NF	ZS630-CF/NF		R60-12 RD60-12	R80-12 RD80-12	R100-12 RD100-12	R150-12 RD150-12	R200-12 RD200-12	JST325-12 RD325-12
800	S800-CF/NF/NE/RF/RE/PF/PE/NN, H800-NE, L800-NE, ZAS800-CF/NF, NS800-NF	ZS800-CF/NF		R60-12 RD60-12	R80-12 RD80-12	R100-12 RD100-12	R150-12 RD150-12	R200-12 RD200-12	JST325-12 RD325-12
1000	S1000-CE/NN, TL-1000NE				R80-12 RD80-12	R100-12 RD100-12	R150-12 RD150-12	R200-12 RD200-12	JST325-12 RD325-12
1200, 1250	S1250-NE/GE/NN, TL-1200NE				R80-12 RD80-12	R100-12 RD100-12	R150-12 RD150-12	R200-12 RD200-12	JST325-12 RD325-12

Note:

①: Commercially made compression terminals can be used (refer to ▭ boxes)
- R/RD ····· JIS-compliant
- CB ····· JEM 1399-compliant
- AMP ····· Made by Tyco Electronics Japan G.K.
- JST ····· Made by Japan Solderless Terminal Manufacturing Co., Ltd.
- NTK ····· Made by Nippon Tanshi Co., Ltd.
- NTM ····· Made by Nichifu Terminal Industries Co., Ltd.

②: Only a single terminal can be connected. If it is necessary to connect two terminals, use a circuit breaker with extension bars.

③: Compression terminals in ▭ box cells are made by us at Terasaki. They are available from us or our authorized agents.

④: Compression terminals enclosed in parentheses are to be used as the lower terminal when two terminals are connected.

⑤: For spread extension bars.

⑥: For straight extension bars.

Connection (two terminals)

If a shortage of insulating occurs between the mounting plate and a terminal, use a recommended taping or insulator.

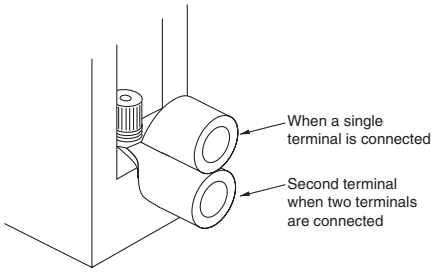

Terasaki made compression terminals are used (refer to box)

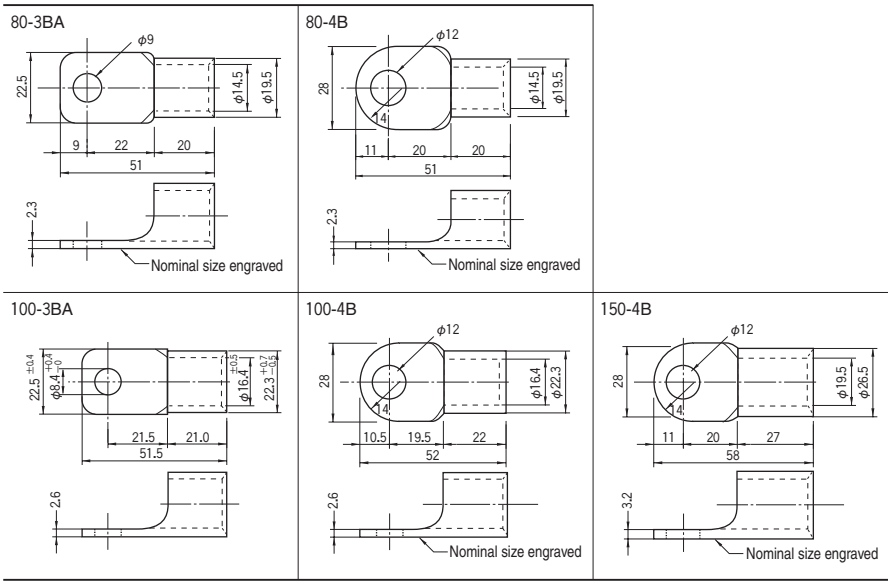

Connection (one electric cable)

If a shortage of insulating occurs, use a recommended taping or insulator.

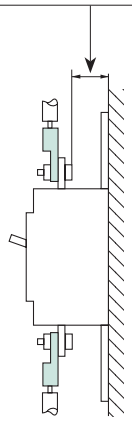

Make connection so that the screw heads face toward the mounting surface.

Connection (two electric cables)

If a shortage of insulating occurs, use a recommended taping or insulator.

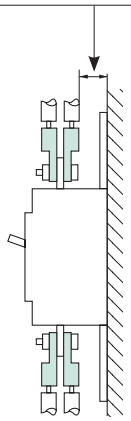

Make connection so that the screw heads face toward the mounting surface.

3 Terminal screw sizes and standard torques

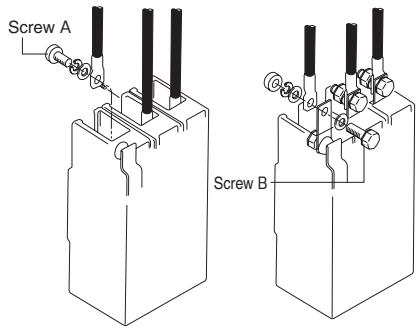

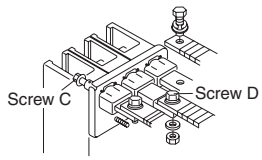

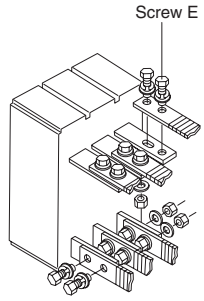

Connecting types / Type			Front connection (FC)				Rear connection (RC) (Flat bar stud)					
Frame size (A)	MCCB	ELCB	Compression terminal Screw size (A)	Compression terminal Torque (N·m)	Extension bar Screw size (B)	Extension bar Torque (N·m)	Screw size (C)	Torque (N·m)	Screw size (D)	Torque (N·m)	Screw size (E)	Torque (N·m)
30		**TZ30EC**	Pan head M5×15 Wire clamping screw	2.3 – 3.5	—	—	—	—	—	—	—	—
50		**TZ50EE**	Pan head M5×15 Wire clamping screw	2.5 – 3.5	—	—	—	—	—	—	—	—
100		**TZ100EC**	Pan head M8×15	5.0 – 7.0	—	—	—	—	—	—	—	—
1000	**TL-1000NE**		—	—	Hex head M12×55	40.2 – 65.7	—	—	—	—	Hex head M12×47	40.2 – 65.7
1200, 1250	**S1250-NE S1250-GE S1250-NN TL-1200NE**		—	—	Hex head M12×55	40.2 – 65.7	—	—	—	—	Hex head M12×47	40.2 – 65.7
1600 ②	**S1600-NE S1600-NN**		—	—	Hex head M12×60	40.2 – 65.7	—	—	—	—	Hex head M10×45	22.5 – 37.2
2000 ②	**XS2000NE XS2000NN**		—	—	Hex head M10×60	22.5 – 37.2	—	—	—	—	Hex head M10×60	22.5 – 37.2
2500 ②	**XS2500NE XS2500NN**		—	—	—	—	—	—	—	—	Hex head M10×60	22.5 – 37.2
3200 ②	**XS3200NE XS3200NN**		—	—	—	—	—	—	—	—	Hex head M10×70	22.5 – 37.2

Note ①: The connector appearance, screw dimensions, and tightening torque are the same as the plug-in (PM).
Note ②: Terminal screws for 1600AF and over are not provided as standard.

	Rear connection (RC) (Bolt stud)				Plug-in (PM)		Draw-out (DR)	
	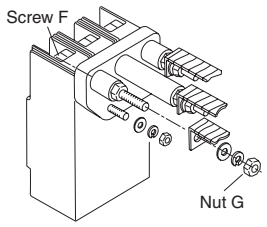						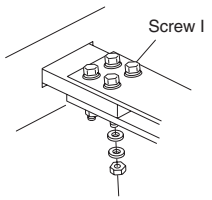	
	Screw size (F)	Torque (N·m)	Nut size (G)	Torque (N·m)	Nut size (J)	Torque (N·m)	Screw size (I)	Torque (N·m)
	—	—	—	—	—	—	—	—
	—	—	—	—	—	—	—	—
	—	—	—	—	—	—	—	—
	—	—	—	—	Hex head M12×47 (screw)	40.2 – 65.7	①	
	—	—	—	—	Hex head M12×47 (screw)	40.2 – 65.7	①	
	—	—	—	—	—	—	Hex head M10×45	22.5 – 37.2
	—	—	—	—	—	—	Hex head M10×60	22.5 – 37.2
	—	—	—	—	—	—	—	—
	—	—	—	—	—	—	—	—

3 Terminal screw sizes and standard torques

Front connection (FC)

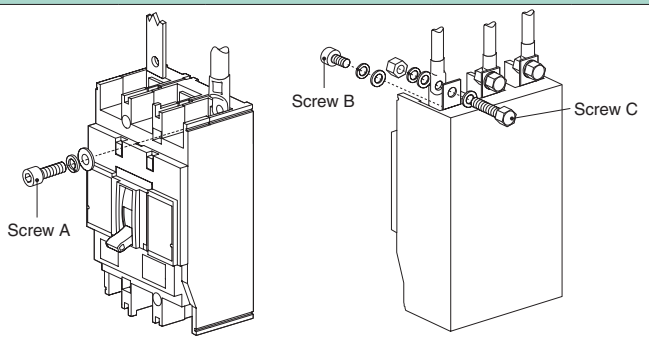

Frame size (A)	MCCB	ELCB	Compression terminal Screw size (A)	Compression terminal Torque (N·m)	Extension bar Screw size (B)	Extension bar Torque (N·m)	Extension bar Screw size (C)	Extension bar Torque (N·m)
30, 50	E30-NM, S30-NM, E50-NM, S50-NM	ZE30-NM, ZS30-NM, ZE50-NM, ZS50-CM	Wire clamping M5×14	2.3 – 2.8	Wire clamping M5×14	2.5 – 3.5	Hex head M5×16	3.5 – 4.5
	PE30-NF/NN, PS30-NF, PE50-NF/NN, PS50-NF		Wire clamping M5×14	2.3 – 3.4	Wire clamping M5×14	2.3 – 3.4	Hex head M8×30	11.8 – 18.6
	PE50-NFZ, PS50-NFZ	PZE30-NF, PZS30-NF, PZE50-NF, PZS50-NF	Wire clamping M5×14	2.3 – 3.4	Wire clamping M5×14	2.3 – 3.4	Hex head M8×30	11.8 – 18.6
	PE50-NFN	PZE50-NFN	Wire clamping M5×14	2.3 – 3.4	Wire clamping M5×14	2.3 – 3.4	Hex head M8×30	11.8 – 18.6
	S50-SF		Wire clamping M5×14	2.3 – 3.4	Wire clamping M5×14	2.3 – 3.4	Hex head M8×30	11.8 – 18.6
		ZS50-SF	Wire clamping M5×14	2.3 – 3.4	Wire clamping M5×14	2.3 – 3.4	Hex head M8×30	11.8 – 18.6
	ZAS50-GF		Pan head M8×16	4.9 – 6.9	Pan head M8×16	4.9 – 6.9	Hex head M8×25	11.8 – 18.6
	PS50-PF		Pan head M8×16	4.9 – 6.9	Pan head M8×16	4.9 – 6.9	Hex head M8×25	11.8 – 18.6
60	PE60-NF, PS60-NF		Pan head M8×14	4.9 – 6.9	Pan head M8×14	4.9 – 6.9	Hex head M8×30	11.8 – 18.6
		PZE60-NF, PZS60-NF	Pan head M8×14	4.9 – 6.9	Pan head M8×14	4.9 – 6.9	Hex head M8×30	11.8 – 18.6
100, 125	E100-NM	ZE100-NM	Pan head M8×15	5.5 – 7.5	Pan head M8×14	5.5 – 7.5	Hex head M8×22	8 – 10
	PE125-NF/NN		Pan head M8×14	4.9 – 6.9	Pan head M8×14	4.9 – 6.9	Hex head M8×30	11.8 – 18.6
	PE125-NFZ	PZE125-NF	Pan head M8×14	4.9 – 6.9	Pan head M8×14	4.9 – 6.9	Hex head M8×30	11.8 – 18.6
	PE125-NFN	PZE125-NFN	Pan head M8×14	4.9 – 6.9	Pan head M8×14	4.9 – 6.9	Hex head M8×30	11.8 – 18.6
	S125-SF(15 – 50A)		Wire clamping M5×14	2.3 – 3.4	Wire clamping M5×14	2.3 – 3.4	Hex head M8×30	11.8 – 18.6
	ZAS125-SF(15 – 50A)	ZS125-SF(15 – 50A), ZS100-SM(16 – 45A)	Wire clamping M5×14	2.3 – 3.4	Wire clamping M5×14	2.3 – 3.4	Hex head M8×30	11.8 – 18.6
	S125-SF(60 – 125A), S125-SN		Pan head M8×14	4.9 – 6.9	Pan head M8×14	4.9 – 6.9	Hex head M8×30	11.8 – 18.6
	ZAS125-SF(60 – 125A)	ZS125-SF(60 – 125A), ZS100-SM(60 – 100A)	Pan head M8×14	4.9 – 6.9	Pan head M8×14	4.9 – 6.9	Hex head M8×30	11.8 – 18.6
	NS125-SF, NAE125-SF, NAS125-SF(15 – 50A)	ZNS125-SF(15 – 50A)	Wire clamping M5×14	2.3 – 3.4	Wire clamping M5×14	2.3 – 3.4	Hex head M8×30	11.8 – 18.6
	NS125-SF, NAE125-SF, NAS125-SF(60 – 125A)	ZNS125-SF(60 – 125A)	Pan head M8×14	4.9 – 6.9	Pan head M8×14	4.9 – 6.9	Hex head M8×30	11.8 – 18.6
	PS125-NF/NE/PF/PE/NM/NN		Pan head M8×16	4.9 – 6.9	Pan head M8×16	4.9 – 6.9	Hex head M8×25	11.8 – 18.6
	S100-GF, S125-GF		Pan head M8×16	4.9 – 6.9	Pan head M8×16	4.9 – 6.9	Hex head M8×25	11.8 – 18.6
	ZAS100-GF, ZAS125-GF	ZS100-GF, ZS125-GF	Pan head M8×16	4.9 – 6.9	Pan head M8×16	4.9 – 6.9	Hex head M8×25	11.8 – 18.6
	H100-NF, H125-NF, L100-NF, L125-NF		Hex socket head M8×20	7.8 – 12.7	Hex socket head M8×20	7.8 – 12.7	Hex head M10×25	22.5 – 37.2
225, 250	E250-SF, S250-SF, S250-SN		Hex socket head M8×20	7.8 – 12.7	Hex socket head M8×20	7.8 – 12.7	Hex head M10×25	22.5 – 37.2
	S250-SM, ZAE250-SF, ZAS250-SF	ZE250-SF, ZS250-SF/SM	Hex socket head M8×20	7.8 – 12.7	Hex socket head M8×20	7.8 – 12.7	Hex head M10×25	22.5 – 37.2
	NE250-SF, NS250-SF	ZNE250-SF, ZNS250-SF	Hex socket head M8×20	7.8 – 12.7	Hex socket head M8×20	7.8 – 12.7	Hex head M10×25	22.5 – 37.2
	PS250-NE/PF/PE/NN		Hex socket head M8×20	7.8 – 12.7	Hex socket head M8×20	7.8 – 12.7	Hex head M10×25	22.5 – 37.2
	H225-NF, L225-NF		Hex socket head M8×20	7.8 – 12.7	Hex socket head M8×20	7.8 – 12.7	Hex head M10×25	22.5 – 37.2
	H225-NE, H250-NF, L250-NF, ZAS225-GF, ZAS250-GF	ZS225-GF, ZS250-GF	Hex socket head M8×20	7.8 – 12.7	Hex socket head M8×20	7.8 – 12.7	Hex head M10×25	22.5 – 37.2
400	E400-NF, ZAE400-NF, ZAS400-NF/GF	ZE400-NF, ZS400-NF/GF	Hex socket head M10×25	13.7 – 22.5	Hex socket head M10×25	13.7 – 22.5	Hex head M12×35	40.2 – 65.7
	PS400-CF/NF/NE/GF/GE/NN, PH400-CF/CE		Hex socket head M10×30	13.7 – 22.5	Hex socket head M10×30	13.7 – 22.5	Hex head M12×35	40.2 – 65.7
	H400-NE, L400-NE		Hex socket head M10×30	13.7 – 22.5	Hex socket head M10×30	13.7 – 22.5	Hex head M12×35	40.2 – 65.7
	NE400-NF, NS400-NF	ZNE400-NF, ZNS400-NF	Hex socket head M10×25	13.7 – 22.5	Hex socket head M10×25	13.7 – 22.5	Hex head M12×35	40.2 – 65.7
600, 630, 800	S630-CF/NF/NE/GN, S800-CF/NF/NE/RF/RE/PF/PE/NN, H630-NE, L630-NE, H800-NE, L800-NE		—	—	Hex socket head M8×25×2	Standard mounting	Hex head M12×40	40.2 – 65.7
	PS630-CF/NF/NE/GF/GE/NN, PH630-CF/CE		—	—	Hex socket head M10×30	13.7 – 22.5	Hex head M12×40	40.2 – 65.7
	ZAS630-CF/NF, ZAS800-CF/NF	ZS630-CF/NF, ZS800-CF/NF	—	—	Hex socket head M8×25×2	Standard mounting	Hex head M12×40	40.2 – 65.7
	NS630-NF, NS800-NF		—	—	Hex socket head M8×25×2	Standard mounting	Hex head M12×40	40.2 – 65.7
1000	S1000-CE/NN		—	—	Hex socket head M8×30×2	Standard mounting	Hex head M12×55	40.2 – 65.7

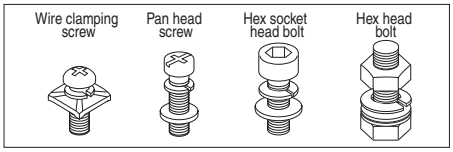

	Rear connection (RC) (Flat bar stud)				Flush-mounted (FP)				Plug-in (PM)		Draw-out (DR)	
	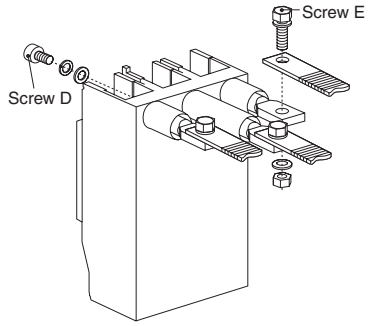				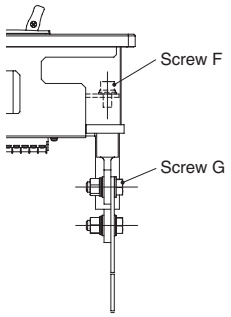				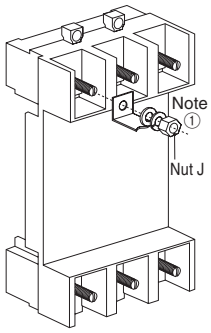		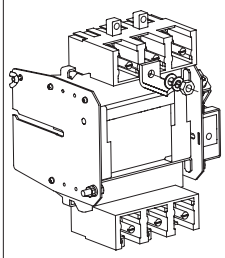	
					With flat bar stud							
	Screw size (D)	Torque (N·m)	Screw size (E)	Torque (N·m)	Screw size (F)	Torque (N·m)	Screw size (G)	Torque (N·m)	Nut size (J)	Torque (N·m)	Nut size (K)	Torque (N·m)
	Wire clamping M5×14	2.3 – 2.8	Hex head M6×18	4 – 5	Wire clamping M5×14	2.3 – 2.8	Hex head M6×18	4 – 5	—	—	—	—
	Pan head M5×14	2.3 – 2.8	Hex head M6×22	4.7 – 7.4	Pan head M5×14	2.3 – 2.8	Hex head M6×22	4.7 – 7.4	Hex. nut M6	3.6 – 6.0	—	—
	Pan head M5×14	2.3 – 2.8	Hex head M6×22	4.7 – 7.4	Pan head M5×14	2.3 – 2.8	Hex head M6×22	4.7 – 7.4	—	—	—	—
	—	—	—	—	—	—	—	—	—	—	—	—
	Special Pan head M5×14	2.3 – 2.8	Hex head M6×22	4.7 – 7.4	Special Pan head M5×14	2.3 – 2.8	Hex head M6×22	4.7 – 7.4	Hex. nut M6	3.6 – 6.0	—	—
	Special Pan head M5×14	2.3 – 2.8	Hex head M6×22	4.7 – 7.4	Special Pan head M5×14	2.3 – 2.8	Hex head M6×22	4.7 – 7.4	—	—	—	—
	Hex socket head M6×20	7.8 – 11.8	Hex head M8×25	11.8 – 18.6	Hex socket head M6×20	7.8 – 11.8	Hex head M8×25	11.8 – 18.6	—	—	—	—
	Hex socket head M6×16	7.8 – 11.8	Hex head M8×23	11.8 – 18.6	Hex socket head M6×16	7.8 – 11.8	Hex head M8×23	11.8 – 18.6	Hex. nut M6	3.6 – 6.0	—	—
	Pan head M6×16	3.2 – 4.8	Hex head M8×23	11.8 – 18.6	Pan head M6×16	3.2 – 4.8	Hex head M8×23	11.8 – 18.6	Hex. nut M6	3.6 – 6.0	—	—
	Pan head M6×16	3.2 – 4.8	Hex head M8×23	11.8 – 18.6	Pan head M6×16	3.2 – 4.8	Hex head M8×23	11.8 – 18.6	—	—	—	—
	Pan head M8×15	5.5 – 7.5	Hex head M6×18	4 – 5	Pan head M8×15	5.5 – 7.5	Hex head M6×18	4 – 5	—	—	—	—
	Pan head M6×16	3.2 – 4.8	Hex head M8×23	11.8 – 18.6	Pan head M6×16	3.2 – 4.8	Hex head M8×23	11.8 – 18.6	Hex. nut M6	3.6 – 6.0	—	—
	Pan head M6×16	3.2 – 4.8	Hex head M8×23	11.8 – 18.6	Pan head M6×16	3.2 – 4.8	Hex head M8×23	11.8 – 18.6	—	—	—	—
	—	—	—	—	—	—	—	—	—	—	—	—
	Special Pan head M5×14	2.3 – 2.8	Hex head M6×22	4.7 – 7.4	Special Pan head M5×14	2.3 – 2.8	Hex head M6×22	4.7 – 7.4	Hex. nut M6	3.6 – 6.0	—	—
	(ON) Special Pan head M5×14 (OFF) Special Pan head M5×24	2.3 – 2.8 2.3 – 2.8	Hex head M6×22	4.7 – 7.4	(ON) Special Pan head M5×14 (OFF) Special Pan head M5×24	2.3 – 2.8 2.3 – 2.8	Hex head M6×22	4.7 – 7.4	—	—	—	—
	Hex socket head M6×16	7.8 – 11.8	Hex head M8×23	11.8 – 18.6	Hex socket head M6×16	7.8 – 11.8	Hex head M8×23	11.8 – 18.6	Hex. nut M6	3.6 – 6.0	—	—
	Hex socket head M6×16	7.8 – 11.8	Hex head M8×23	11.8 – 18.6	Hex socket head M6×16	7.8 – 11.8	Hex head M8×23	11.8 – 18.6	—	—	—	—
	—	—	—	—	—	—	—	—	—	—	—	—
	—	—	—	—	—	—	—	—	—	—	—	—
	Hex socket head M6×16	7.8 – 11.8	Hex head M8×23	11.8 – 18.6	Hex socket head M6×16	7.8 – 11.8	Hex head M8×23	11.8 – 18.6	Hex. nut M6	3.6 – 6.0	—	—
	Hex socket head M6×20	7.8 – 11.8	Hex head M8×25	11.8 – 18.6	Hex socket head M6×20	7.8 – 11.8	Hex head M8×25	11.8 – 18.6	Hex. nut M6	3.6 – 6.0	—	—
	Hex socket head M6×20	7.8 – 11.8	Hex head M8×25	11.8 – 18.6	Hex socket head M6×20	7.8 – 11.8	Hex head M8×25	11.8 – 18.6	—	—	—	—
	Hex socket head M6×20	7.8 – 11.8	Hex head M8×25	11.8 – 18.6	Hex socket head M6×20	7.8 – 11.8	Hex head M8×25	11.8 – 18.6	Hex. nut M8	8.8 – 14.7	—	—
	Hex socket head M6×20	7.8 – 11.8	Hex head M8×25	11.8 – 18.6	Hex socket head M6×20	7.8 – 11.8	Hex head M8×25	11.8 – 18.6	Hex. nut M8	8.8 – 14.7	—	—
	Hex socket head M6×20	7.8 – 11.8	Hex head M8×25	11.8 – 18.6	Hex socket head M6×20	7.8 – 11.8	Hex head M8×25	11.8 – 18.6	—	—	—	—
	—	—	—	—	—	—	—	—	—	—	—	—
	Hex socket head M6×20	7.8 – 11.8	Hex head M8×25	11.8 – 18.6	Hex socket head M6×20	7.8 – 11.8	Hex head M8×25	11.8 – 18.6	Hex. nut M8	8.8 – 14.7	Hex. nut M8	8.8 – 14.7
	Hex socket head M6×20	7.8 – 11.8	Hex head M8×25	11.8 – 18.6	Hex socket head M6×20	7.8 – 11.8	Hex head M8×25	11.8 – 18.6	Hex. nut M8	8.8 – 14.7	—	—
	Hex socket head M6×20	7.8 – 11.8	Hex head M8×25	11.8 – 18.6	Hex socket head M6×20	7.8 – 11.8	Hex head M8×25	11.8 – 18.6	—	—	—	—
	Hex socket head M10×20	18.6 – 29.4	Hex head M12×35	40.2 – 65.7	Hex socket head M10×20	18.6 – 29.4	Hex head M12×35	40.2 – 65.7	—	—	—	—
	Hex socket head M10×20	18.6 – 29.4	Hex head M12×35	40.2 – 65.7	Hex socket head M10×20	18.6 – 29.4	Hex head M12×35	40.2 – 65.7	Hex. nut M10	18.6 – 29.4	Hex. nut M10	18.6 – 29.4
	Hex socket head M10×20	18.6 – 29.4	Hex head M12×35	40.2 – 65.7	Hex socket head M10×20	18.6 – 29.4	Hex head M12×35	40.2 – 65.7	Hex. nut M10	18.6 – 29.4	Hex. nut M10	18.6 – 29.4
	—	—	—	—	—	—	—	—	—	—	—	—
	Hex socket head M10×25	18.6 – 29.4	Hex head M12×40	40.2 – 65.7	Special hex socket head M10×27	18.6 – 29.4	Hex head M12×40	40.2 – 65.7	Standard (PMC): Hex. nut M16 High-performance (PMB): Hex. nut M12	 51.5 – 84.3 32.3 – 51.9	Hex. nut M12 ②	32.3 – 51.9
	Hex socket head M8×25	8.8 – 14.7	Hex head M12×30	40.2 – 65.7	Hex socket head M8×25	8.8 – 14.7	Hex head M12×30	40.2 – 65.7	Hex. nut M10	18.6 – 29.4	Hex. nut M10	18.6 – 29.4
	Hex socket head M10×25	18.6 – 29.4	Hex head M12×40	40.2 – 65.7	Special hex socket head M10×27	18.6 – 29.4	Hex head M12×40	40.2 – 65.7	—	—	—	—
	—	—	—	—	—	—	—	—	—	—	—	—
	Special hex socket head M10×30	18.6 – 29.4	Hex head M12×47	40.2 – 65.7	Special hex socket head M10×30	18.6 – 29.4	Hex head M12×47	40.2 – 65.7	—	—	—	—

Note ①: Secure the conductor with the correct nut and washer to ensure full contact of conductor with terminal on the plug-in base, so that the steel terminal bolt is not used as the current path.

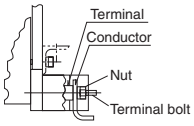

Note ②: Applies only to S630 and S800.

4 Insulation distance from the line side

The insulation distance between the breaker and earthed metal parts and insulators shown in the table on the next page must be maintained to prevent arcing faults occurring due to conductive ionised gas. In addition, completely cover exposed conductors, to their roots at the breaker or to below the height protected by interpole barriers, on the line side of the breaker using insulation tube or tape, in order to provide positive protection against short circuit or ground fault due to metal chipping, surge voltage, dust particles or salt. Be sure to install the interpole barriers supplied with the breaker.

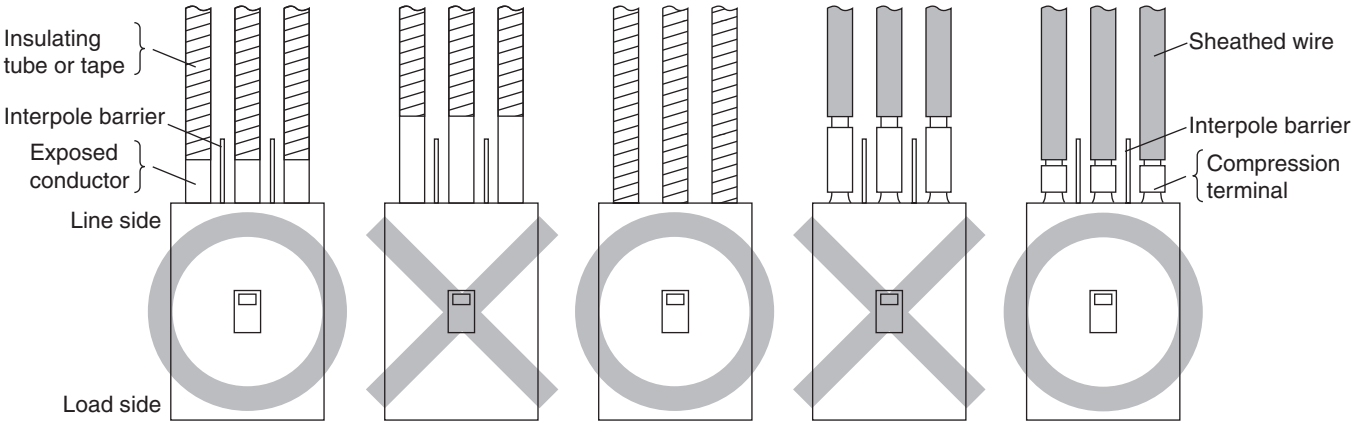

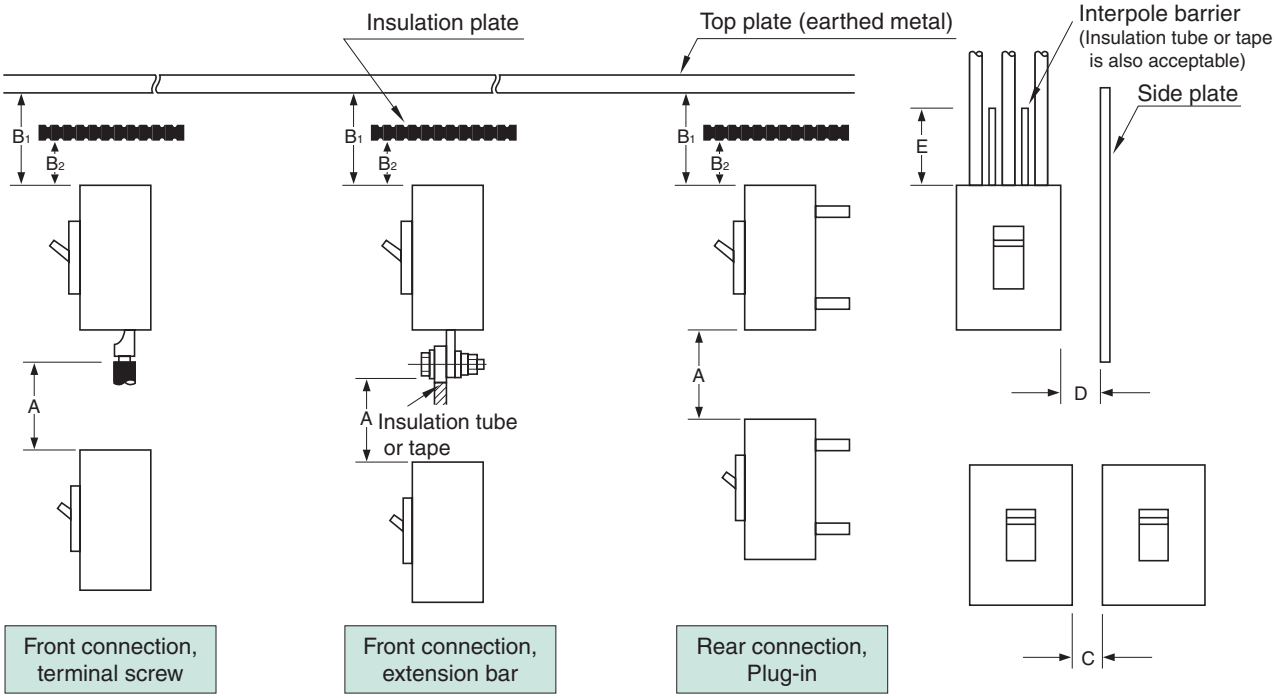

A : Distance from lower breaker to exposed live part of upper breaker terminal (front connection) or distance from lower breaker to end face of upper breaker (rear connection, plug-in).
B_1 : Distance from end face of breaker to top plate.
B_2 : Distance from end face of breaker to insulation plate.
C : Gap between breakers.
D : Distance from side of breaker to side plate (earthed metal).
E : Dimension of insulation over exposed conductors.

Insulation distance, mm (415V AC or less) Note ①

Series	Moulded Case Circuit Breakers	Earth Leakage Circuit Breakers	A Breaker upper and lower gap Note ②	B1 Bare grounded metal plate	B2 Insulating plate, coated plate		C	D	E
E: Economical	PE30-NF, PE50-NF, PE60-NF	PZE30-NF, PZE50-NF, PZE60-NF	30	30	10	∗	Possible to set close Note ③	25	Not less than the length of the bare live part Note ④
	PE125-NF	PZE125-NF	30	30	10	∗	Possible to set close Note ③	25	Not less than the length of the bare live part Note ④
	E250-SF	ZE250-SF	50	40	40	∗	Possible to set close Note ③	50	Not less than the length of the bare live part Note ④
	E400-NF	ZE400-NF	100	80	60	∗	Possible to set close Note ③	80	Not less than the length of the bare live part Note ④
Standard N: Standard	PS30-NF	PZS30-NF	30	30	10	∗	Possible to set close Note ③	25	Not less than the length of the bare live part Note ④
	PS50-NF	PZS50-NF	30	30	10	∗	Possible to set close Note ③	25	Not less than the length of the bare live part Note ④
	PS60-NF	PZS60-NF	30	30	10	∗	Possible to set close Note ③	25	Not less than the length of the bare live part Note ④
	S50-SF, S125-SF	ZS50-SF, ZS125-SF	30	30	10	∗	Possible to set close Note ③	25	Not less than the length of the bare live part Note ④
	PS125-NF, PS125-NE		50	10	10	∗	Possible to set close Note ③	25	Not less than the length of the bare live part Note ④
	PS250-NE		50	40	30	∗	Possible to set close Note ③	25	Not less than the length of the bare live part Note ④
	S250-SF	ZS250-SF	50	50	40	∗	Possible to set close Note ③	50	Not less than the length of the bare live part Note ④
	PS400-CF, PS400-NF, PS400-NE		80 Note ⑤	80	60	∗	Possible to set close Note ③	80	Not less than the length of the bare live part Note ④
		ZS400-NF	100	80	60	∗	Possible to set close Note ③	80	Not less than the length of the bare live part Note ④
	PS630-CF, PS630-NF, PS630-NE		80 Note ⑤	80	60	∗	Possible to set close Note ③	80	Not less than the length of the bare live part Note ④
	S630-CF, S630-NF, S630-NE, S800-CF, S800-NF, S800-NE	ZS630-CF, ZS630-NF, ZS800-CF, ZS800-NF	120	100	80		Possible to set close Note ③	80	Not less than the length of the bare live part Note ④
	S1000-CE, S1250-NE		150	120	80		Possible to set close Note ③	80	Not less than the length of the bare live part Note ④
	S1600-NE, XS2000NE, XS2500NE, XS3200NE		150	150	100		Possible to set close Note ③	100	Not less than the length of the bare live part Note ④
Standard G: High-fault Level	S100-GF, S125-GF	ZS100-GF, ZS125-GF	75	60	25	∗	Possible to set close Note ③	25	Not less than the length of the bare live part Note ④
	PS50-PF, PS125-PF, PS125-PE		75	45	25	∗	Possible to set close Note ③	25	Not less than the length of the bare live part Note ④
		ZS225-GF, ZS250-GF	100	80	60	∗	Possible to set close Note ③	50	Not less than the length of the bare live part Note ④
	PS250-PF, PS250-PE		80	80	30	∗	Possible to set close Note ③	25	Not less than the length of the bare live part Note ④
	PS400-GF, PS400-GE		80 Note ⑤	80	60	∗	Possible to set close Note ③	80	Not less than the length of the bare live part Note ④
		ZS400-GF	100	80	60	∗	Possible to set close Note ③	80	Not less than the length of the bare live part Note ④
	PS630-GF, PS630-GE		80 Note ⑤	80	60	∗	Possible to set close Note ③	80	Not less than the length of the bare live part Note ④
	S800-RF, S800-PF, S800-RE, S800-PE		150	120	80		Possible to set close Note ③	80	Not less than the length of the bare live part Note ④
	S1250-GE		150	150	100		Possible to set close Note ③	100	Not less than the length of the bare live part Note ④
Current-limiting H: Standard	H100-NF, H125-NF, H225-NF, H225-NE, H250-NF		100	80	60	∗	Possible to set close Note ③	50	Not less than the length of the bare live part Note ④
	PH400-CF, PH400-CE, PH630-CF, PH630-CE		80 Note ⑤	120	80	∗	Possible to set close Note ③	80	Not less than the length of the bare live part Note ④
	H400-NE		120	120	80	∗	Possible to set close Note ③	80	Not less than the length of the bare live part Note ④
	H630-NE, H800-NE		120 Note ⑤	120	80		Possible to set close Note ③	80	Not less than the length of the bare live part Note ④
	TL-1000NE, TL-1200NE		150	150	100		Possible to set close Note ③	100	Not less than the length of the bare live part Note ④
Current-limiting L: High-fault Level	L100-NF, L225-NF, L125-NF, L250-NF		100	80	60	∗	Possible to set close Note ③	50	Not less than the length of the bare live part Note ④
	L400-NE		120	120	80	∗	Possible to set close Note ③	80	Not less than the length of the bare live part Note ④
	L630-NE, L800-NE		120 Note ⑤	120	80		Possible to set close Note ③	80	Not less than the length of the bare live part Note ④
Motor protection	E30-NM, S30-NM, E50-NM	ZE30-NM, ZS30-NM, ZE50-NM	30	10	10	∗	Possible to set close Note ③	25	Not less than the length of the bare live part Note ④
		ZS50-CM	40	30	30	∗	Possible to set close Note ③	25	Not less than the length of the bare live part Note ④
	S50-NM, E100-NM	ZE100-NM	50	50	50	∗	Possible to set close Note ③	25	Not less than the length of the bare live part Note ④
		ZS100-SM	30	30	10	∗	Possible to set close Note ③	25	Not less than the length of the bare live part Note ④
	S250-SM	ZS250-SM	50	50	40	∗	Possible to set close Note ③	50	Not less than the length of the bare live part Note ④
Circuit Breaker with Earth Leakage Alarm	PE50-NFZ		30	30	10	∗	Possible to set close Note ③	25	Not less than the length of the bare live part Note ④
	PE125-NFZ, PS50-NFZ		30	30	10	∗	Possible to set close Note ③	25	Not less than the length of the bare live part Note ④
	ZAS125-SF		30	30	10	∗	Possible to set close Note ③	25	Not less than the length of the bare live part Note ④
	ZAS50-GF, ZAS100-GF, ZAS125-GF		75	60	25	∗	Possible to set close Note ③	25	Not less than the length of the bare live part Note ④
	ZAS225-GF, ZAS250-GF		100	80	60	∗	Possible to set close Note ③	50	Not less than the length of the bare live part Note ④
	ZAE250-SF		50	40	40	∗	Possible to set close Note ③	50	Not less than the length of the bare live part Note ④
	ZAS250-SF		50	50	40	∗	Possible to set close Note ③	50	Not less than the length of the bare live part Note ④
	ZAE400-NF, ZAS400-NF, ZAS400-GF		100	80	60	∗	Possible to set close Note ③	80	Not less than the length of the bare live part Note ④
	ZAS630-CF, ZAS630-NF, ZAS800-CF, ZAS800-NF		120	100	80		Possible to set close Note ③	80	Not less than the length of the bare live part Note ④

Insulation distance, mm (690V AC) Note ①

Series	Moulded Case Circuit Breakers	A Breaker upper and lower gap Note ②	B1 Bare grounded metal plate	B2 Insulating plate, coated plate		C	D	E
690V AC Circuit Breaker	L125-PF	120	120	80	∗	Possible to set close Note ③	50	Not less than the length of the bare live part Note ④
	L400-PE	120	120	80		Possible to set close Note ③	80	—
	L800-PE	200	200	160		Possible to set close Note ③	100	—

Notes:

①: Required to allow free and uninterrupted flow of arc gases. Ensure additional clearance or insulation distance if required to perform wiring, barrier installation or electrical work or to meet the need for more insulation distance between bare live parts and grounded metal members in a switchboard or the like.

②: The figures are for lower breakers.

③: It may not be possible to set close in case of breakers fitted with accessories. For details see page 5-22 "7 Close fitting mounting".

④: For front connection breakers, insulate all exposed conductors of the line side until the breaker end. If interpole barriers are packed, be sure to use the barriers; more over, insulate all exposed conductors by insulating tape or the like so that the tape overlaps with the barriers.

⑤: Arc gas is discharged to the line side and load side. Please be careful when arranging within the board.

∗. If using extension bars (optional), ensure the insulation distance specified for the application.

5 Lists of breaker mounting screws

Series	Moulded Case Circuit Breakers	Earth Leakage Circuit Breakers	Number of poles	Front-connected (FC)		Rear-connected (RC)		Plug-in (PM) for switchboards			
								PMB High-performance		PMC Standard	
				Screw size	Qty	Screw size	Qty	Screw size	Qty	Screw size	Qty
E, PE, ZAE, ZE, PZE	E30-NM, E50-NM, E100-NM	ZE30-NM, ZE50-NM, ZE100-NM	3	Pan head M4×55	2	Pan head M4×65	2	—	—	—	—
	E250-SF		3	Pan head M4×55	2	Pan head M4×55	2	—	—	Pan head M4×65	2
			4	Pan head M4×55	4	Pan head M4×55	4			Pan head M4×65	4
	PE30-NF/NN, PE50-NF/NN, PE60-NF, PE125-NF/NN	PZE30-NF, PZE50-NF, PZE60-NF, PZE125-NF	2	Pan head M4×60	2	Pan head M4×60	2	—	—	—	—
			3							Pan head M4×75	2
	PE50-NFZ, PE125-NFZ		3	Pan head M4×60	2	Pan head M4×60	2	—	—	—	—
	PE50-NFN, PE125-NFN	PZE50-NFN, PZE125-NFN	3	Pan head M4×60	2	—	—	—	—	—	—
	E400-NF		3	Pan head M6×100	4	Pan head M6×100	4	—	—	—	—
	ZAE250-SF	ZE250-SF	3	Pan head M4×55	2	Pan head M4×55	2	—	—	—	—
	ZAE400-NF	ZE400-NF	3	Pan head M6×100	4	Pan head M6×100	4	—	—	—	—
S, PS, ZAS, ZS, PZS	S30-NM, S50-NM	ZS30-NM, ZS50-CM	3	Pan head M4×55	2	Pan head M4×65	2	—	—	—	—
	S50-SF, S125-SF		2	Pan head M4×61	2	Pan head M4×61	2	—	—	—	—
			3							Pan head M4×75	2
			4							—	—
	S125-SN		3	Pan head M4×61	2	Pan head M4×61	2	—	—	Pan head M4×75	2
			4							—	—
	S100-GF, S125-GF		2	Pan head M4×55	2	Pan head M4×55	2	Pan head M4×80	2	—	—
			3					Pan head M4×80	2	Pan head M4×58	2
			4	Pan head M4×55	4	Pan head M4×55	4	Pan head M4×80	4	—	—
	S250-SF		2	Pan head M4×55	2	Pan head M4×55	2	—	—	Pan head M4×65	2
			3	Pan head M4×55	2	Pan head M4×55	2	—	—	Pan head M4×65	2
			4	Pan head M4×55	4	Pan head M4×55	4	—	—	Pan head M4×65	4
	S250-SM	ZS250-SM	3	Pan head M4×55	2	Pan head M4×55	2	—	—	—	—
	S250-SN		3	Pan head M4×55	2	Pan head M4×55	2	—	—	Pan head M4×65	2
			4	Pan head M4×55	4	Pan head M4×55	4	—	—	—	—
	S630-CF/NF/NE/GN, S800-CF/NF/NE/RF/RE/PF/PE/NN		3	Pan head M8×45	4	Pan head M8×45	4	Pan head M8×45	4	Cap nut *	4
			4							—	—
	S1000-CE/NN		3,4	Pan head M8×45	4	Pan head M8×45	4	—	—	—	—
	S1250-NE/GE/NN		3,4	Pan head M8×50	4	Pan head M8×50	4	—	—	Cap nut *	4
	S1600-NE/NN		3,4	Pan head M8×50	4	Pan head M8×50	4	—	—	—	—
	PS30-NF, PS50-NF, PS60-NF	PZS30-NF, PZS50-NF, PZS60-NF	2	Pan head M4×60	2	Pan head M4×60	2	—	—	—	—
			3							Pan head M4×75	2
	PS50-NFZ		3	Pan head M4×60	2	Pan head M4×60	2	—	—	—	—
	PS50-PF, PS125-NF/NE/PF/PE		2	Pan head M4×62	2	Pan head M4×62	2	—	—	Pan head M4×75	2
			3					Pan head M4×90	2		
			4					Pan head M4×90	4	—	—
	PS125-NM		3	Pan head M4×62	2	Pan head M4×62	2	—	—	—	—
	PS125-NN		3	Pan head M4×62	2	Pan head M4×62	2	Pan head M4×90	2	Pan head M4×75	2
			4					Pan head M4×90	4	—	—
	PS250-NE/PF/PE/NN		3	Pan head M4×55	2	Pan head M4×55	2	Pan head M4×80	2	Pan head M4×65	2
			4	Pan head M4×55	4	Pan head M4×55	4	Pan head M4×80	4	—	—
	PS400-CF/NF/NE/GF/GE/NN		3	Pan head M6×100	4	Pan head M6×100	4	Pan head M6×120	4	Pan head M6×100	4
			4							—	—
	PS630-CF/NF/NE/GF/GE/NN		3	Pan head M6×100	4	Pan head M6×100	4	Pan head M6×120	4	Pan head M6×100	4
			4							—	—
	ZAS125-SF	ZS50-SF, ZS125-SF, ZS100-SM	3	Pan head M4×61	2	Pan head M4×61	2	—	—	—	—
	ZAS50-GF, ZAS100-GF, ZAS125-GF	ZS100-GF, ZS125-GF	3	Pan head M4×55	2	Pan head M4×55	2	—	—	—	—
			4	Pan head M4×55	4	Pan head M4×55	4	—	—	—	—
	ZAS250-SF	ZS250-SF	3	Pan head M4×55	2	Pan head M4×55	2	—	—	—	—
	ZAS225-GF, ZAS250-GF	ZS225-GF, ZS250-GF	3	Pan head M4×55	2	Pan head M4×55	2	—	—	—	—
			4	Pan head M4×55	4	Pan head M4×55	4	—	—	—	—
	ZAS400-NF/GF	ZS400-NF/GF	3,4	Pan head M6×100	4	Pan head M6×100	4	—	—	—	—
	ZAS630-CF/NF, ZAS800-CF/NF	ZS630-CF/NF, ZS800-CF/NF	3,4	Pan head M8×45	4	Pan head M8×45	4	—	—	—	—
PH, H, L	H225-NE, H250-NF, L250-NF		3	Pan head M4×90	2	Pan head M4×90	2	—	—	—	—
			4	Pan head M4×90	4	Pan head M4×90	4	—	—	—	—
	H100-NF, H125-NF, H225-NF, L100-NF, L125-NF, L225-NF		3	Pan head M4×90	2	Pan head M4×90	2	Pan head M4×115	4	Pan head M4×100	4
			4	Pan head M4×90	4	Pan head M4×90	4	Pan head M4×115	4	Pan head M4×100	4
	PH400-CF/CE		3	Pan head M6×100	4	Pan head M6×100	4	Pan head M6×120	4	Pan head M6×100	4
			4							—	—
	H400-NE, L400-NE		3	Pan head M6×140	4	Pan head M6×140	4	Pan head M6×160	4	Pan head M6×140	4
			4							—	—
	PH630-CF/CE		3	Pan head M6×100	4	Pan head M6×100	4	Pan head M6×120	4	Pan head M6×100	4
			4							—	—
	H630-NE, L630-NE, H800-NE, L800-NE		3	Pan head M8×85	4	Pan head M8×85	4	Pan head M8×85	4	Cap nut *	4
			4							—	—
NE, ZNE, NS, ZNS	NS125-SF	ZNS125-SF	3	Pan head M4×61	2	—	—	—	—	—	—
	NE250-SF, NS250-SF	ZNE250-SF, ZNS250-SF	3	Pan head M4×55	2	—	—	—	—	—	—
	NE400-NF, NS400-NF	ZNE400-NF, ZNS400-NF	3	Pan head M6×100	4	—	—	—	—	—	—
	NS630-NF, NS800-NF		3	Pan head M8×45	4	—	—	—	—	—	—
XS	XS2000NE/NN		3,4	Hex socket head M10×160	4	Hex socket head M10×120	4	—	—	—	—
	XS2500NE/NN, XS3200NE/NN		3,4	—	—	Hex socket head M10×120	4	—	—	—	—
TL	TL-1000NE, TL-1200NE		3,4	Pan head M8×50	4	Pan head M8×50	4	—	—	Cap nut *	4
TZ		TZ30EC, TZ50EE	2,3	Pan head M4×35	2	—	—	—	—	—	—
		TZ100EC	3	Pan head M4×58	2	—	—	—	—	—	—

* Width across flats of hex socket: 8mm (M10), thread size: M8

6 Effect of mounting angle

The overcurrent tripping characteristics of electronic and thermal-magnetic moulded case circuit breakers are not affected by mounting angle. However, please note that the overcurrent tripping characteristics of hydraulic-magnetic type moulded case circuit breakers will change depending on the mounting angle due to the effect of gravity on the iron core inside the oil dashpot.
Generally, it is recommended to use hydraulic-magnetic type moulded case circuit breakers in a vertical orientation.

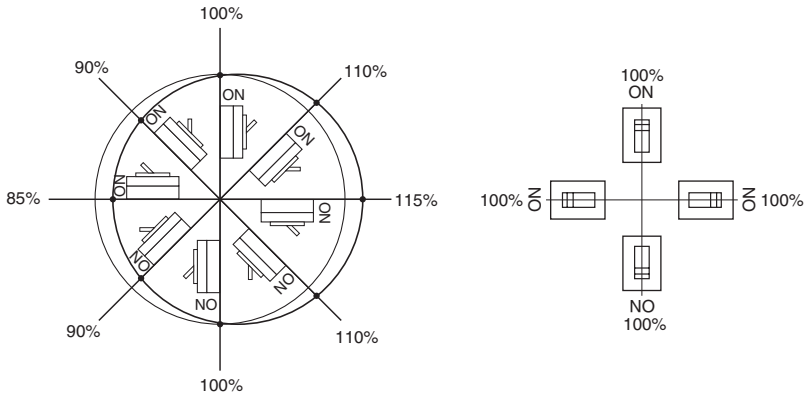

Fig. 1. Rate of change of rated current value depending on mounting angle (example)

● Hydraulic-magnetic type

Frame size (A)	Moulded Case Circuit Breakers	Earth Leakage Circuit Breakers	Fig
30	**E30-NM, S30-NM**	**ZE30-NM, ZS30-NM**	1
	PE30-NF (3 – 10A), PS30-NF (3 – 10A)	**PZE30-NF (5 – 10A), PZS30-NF (5 – 10A)**	3
50	**E50-NM, S50-NM**	**ZE50-NM, ZS50-CM**	1
100	**E100-NM**	**ZE100-NM**	1

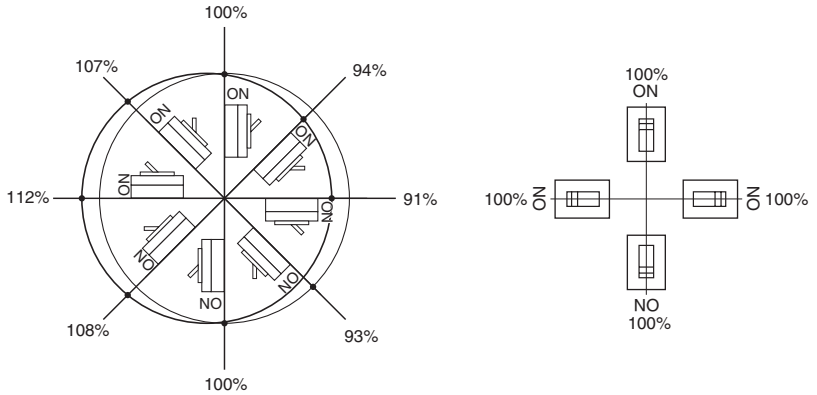

Fig. 3. Rate of change of rated current value depending on mounting angle (example)

7 Close fitting mounting

1. The following models can be closely fitted even when internal accessories are mounted. (Except when auxiliary circuit terminals are used with the plug-in.)

Moulded Case Circuit Breakers	Earth Leakage Circuit Breakers
E30-NM, S30-NM, E50-NM, PE30-NF/NN, PS30-NF, PE50-NF/NN, PS50-NF, PE60-NF, PS60-NF, PE125-NF/NN, S50-SF, S125-SF/SN, NS125-SF, S100-GF, S125-GF, PS50-PF, PS125-NF/NE/PF/PE/NN, PS250-NE/PF/PE/NN, H100-NF, H125-NF, H225-NF, H225-NE, H250-NF, L100-NF, L125-NF, L225-NF, L250-NF, E250-SF, S250-SF, S250-SM/SN, NE250-SF, NS250-SF, ZAE250-SF, ZAS250-SF, E400-NF, PS400-CF/NF/NE/GF/GE/NN, PH400-CF/CE, H400-NE, L400-NE, NE400-NF, NS400-NF, ZAE400-NF, ZAS400-NF/GF, TB-5S/5P/5D/51C/52C, TB50KSL, TB50KSZ, TB100KSZ	ZE30-NM, ZS30-NM, ZE50-NM, TZ30EC, TZ50EE, TZ100EC, PZE30-NF, PZS30-NF, PZE50-NF, PZS50-NF, PZE60-NF, PZS60-NF, PZE125-NF, ZS50-SF, ZS100-SM, ZS125-SF, ZNS125-SF, ZS100-GF, ZS125-GF, ZS225-GF, ZS250-GF, ZE250-SF, ZS250-SF/SM, ZNE250-SF, ZNS250-SF, ZE400-NF, ZS400-NF/GF, ZNE400-NF, ZNS400-NF, TZ-51C, TZ-52C

2. When internal accessories are mounted to the following models, those cannot be closely fitted because the lead wires can not be pulled out to the load side.

Moulded Case Circuit Breakers	Earth Leakage Circuit Breakers
S50-NM, E100-NM, PE50-NFZ, PS50-NFZ, PE125-NFZ, PE50-NFN, PE125-NFN, ZAS50-GF, ZAS100-GF, ZAS125-GF, ZAS125-SF, ZAS225-GF, ZAS250-GF, S630-CF/NF/NE/GN, NS630-NF, NS800-NF, ZAS630-CF/NF, ZAS800-CF/NF, H630-NE, L630-NE, H800-NE, L800-NE, S800-CF/NF/NE/RF/RE/PF/PE/NN, S1000-CE/NN	ZS50-CM, ZE100-NM, PZE50-NFN, PZE125-NFN, ZS630-CF/NF, ZS800-CF/NF

3. When closely fitting the following models, please use them at 80% or less of the rated current capacity.

Moulded Case Circuit Breakers	Earth Leakage Circuit Breakers
E30-NM, S30-NM, E50-NM, S50-NM, E100-NM	ZE30-NM, ZS30-NM, ZE50-NM, ZS50-CM, ZE100-NM

Note ①: In the case of front-connected configuration, please also mount an interpole barrier between the breakers.
Note ②: In the case of rear-connected configuration, if the short studs are located next to each other, the insulation distance will be insufficient, so use taping or similar after connection.

8 Reverse connection

1. The breakers are available for normal connection by default. Reverse connection is optionally allowed. See the tables below.

Series	Breaker	240V AC	415V AC	440V AC	500V AC	690V AC
Motor protection series	**E30-NM**	○ (2.5kA/2kA)①	×	×	×	×
	S50-NM, E100-NM	○ (5kA/5kA)①	○ (2.5kA/2.5kA)	○ (2.5kA/2.5kA)	×	×
	S30-NM, E50-NM, S250-SM	◎	◎	◎	×	×
Moulded Case Circuit Breakers	**E250-SF**	◎	◎	◎	◎	×
	H100-NF, H125-NF, H225-NF, H225-NE, H250-NF, L100-NF, L125-NF, L225-NF, L250-NF	◎	◎	◎	◎	×
	PE30-NF	◎ ②	◎ ②	◎ ②	×	×
	PS30-NF	◎ ②	◎ ②	◎ ②	◎ ②	×
	PE50-NF, PE60-NF, PE125-NF, PS50-NF, PS60-NF, E400-NF	◎	◎	◎	◎	×
	PS50-PF, PS125-NF/NE/PF/PE	◎	◎	◎	◎	◎
	PS250-NE/PF/PE	◎	◎	◎	◎	◎
	S50-SF, S125-SF, S100-GF, S125-GF, S250-SF, S630-CF/NF/NE, S800-CF/NF/NE/RF/RE/PF/PE, S1000-CE, S1250-NE/GE, S1600-NE, H400-NE, L400-NE, H630-NE, L630-NE, H800-NE, L800-NE, TL-1000NE, TL-1200NE, XS2000NE, XS2500NE, XS3200NE	◎	◎	◎	◎	◎
	PS400-CF/NF/NE/GF/GE, PS630-CF/NF/NE/GF/GE ④	◎	◎	◎	◎	◎
	PH400-CF/CE, PH630-CF/CE ④	◎	◎	◎	◎	◎
	L125-PF, L400-PE, L800-PE	×	×	×	×	×
Switch-disconnectors / Non-automatic trip breakers	**PE30-NN**	◎	◎	×	×	×
	PE50-NN, PE125-NN	◎	◎	◎	◎	×
	S125-SN, PS125-NN, S250-SN, PS250-NN, PS400-NN, PS630-NN, S630-GN, S800-NN, S1000-NN, S1250-NN, S1600-NN, XS2000NN, XS2500NN, XS3200NN	◎	◎	◎	◎	◎
Circuit Breakers with Earth Leakage Alarm	**ZAS125-SF**	◎	×	×	×	×
	PE50-NFZ, PS50-NFZ, PE125-NFZ	×	×	×	×	×
	ZAS50-GF, ZAS100-GF, ZAS125-GF, ZAE250-SF, ZAS250-SF, ZAS225-GF, ZAS250-GF, ZAE400-NF, ZAS400-NF/GF, ZAS630-CF/NF, ZAS800-CF/NF	◎	◎	◎	×	×
Circuit Breakers with Earth Leakage Alarm for Distribution Boards and Control Boards	**TB50KSL, TB50KSZ, TB100KSZ**	×	×	×	×	×
Earth Leakage Circuit Breakers	**ZE250-SF, ZS250-SF**	◎	◎	◎	×	×
	PZE30-NF, PZE50-NF, PZE60-NF, PZE125-NF, PZS30-NF, PZS50-NF, PZS60-NF	×	×	×	×	×
	ZS50-SF, ZS125-SF	◎	◎ ②	◎ ②	×	×
	ZS100-GF, ZS125-GF, ZS225-GF, ZS250-GF	◎	×	×	×	×
	ZE400-NF, ZS400-NF, ZS400-GF ZS630-CF/NF, ZS800-CF/NF	◎	△	△	×	×
Earth Leakage Circuit Breakers for Motor Protection	**ZE30-NM, ZS30-NM, ZE50-NM, ZS50-CM, ZE100-NM**	×	×	×	×	×
	ZS100-SM	◎	◎ ②	◎ ②	×	×
	ZS250-SM	◎	◎	◎	×	×
Earth Leakage Circuit Breakers for Distribution Boards and Control Boards	**TZ30EC, TZ50EE, TZ100EC**	◎	×	×	×	×
TB for Distribution Boards and Control Boards	**TB-5S/5P/5D**	◎	◎	×	×	×

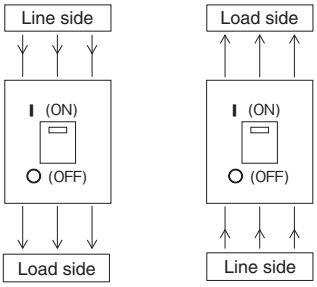

Normal connection　　Reverse connection

Note ③ : Please mount an interpole barrier on the I (ON) side whether the connection is normal connection or reverse connection.
(Except the model with Note ④)

◎ : Standard.
○ : A standard product can be applied, but the breaking capacity will be lower (I_{CU}/I_{CS})
△ : Custom-built product. The rated operational voltage is 415V AC to 440V AC common.
× : Not available.

Note ① : This is the value for 230V AC.
Note ② : The applicable specifications are as follows.
- **PE30-NF** 2P 3P 15A, 20A, 30A
- **PS30-NF** 2P 3P 15A, 20A, 30A
- **ZS50-SF** 3P 40A, 50A
- **ZS125-SF** 3P 40A, 50A, 60A, 75A, 100A, 125A
- **ZS100-SM** 3P 40A, 45A, 60A, 75A, 90A, 100A

Note ④ : In case of normal connection, please mount an interpole barrier on I (ON) side.
In case of reverse connection, please mount an interpole barrier on O (OFF) side.

8 Reverse connection

2. The table below shows the applicability of single phase 3-wire circuit breakers with neutral phase open protection to "system interconnection with reverse power flow".

Series	Breaker	100/200V AC
Single phase 3-wire circuit breakers with neutral phase open protection and earth leakage alarm	NAE125-SF, NAS125-SF, NAE250-SF, NAS250-SF, NAE400-NF, NAS400-NF	◎
Single phase 3-wire circuit breakers with neutral phase open protection	PE50-NFN, PE125-NFN	×
	NS125-SF, NE250-SF, NS250-SF, NE400-NF, NS400-NF, NS630-NF, NS800-NF	◎
Single phase 3-wire earth leakage circuit breakers with neutral phase open protection	PZE50-NFN, PZE125-NFN	×
	ZNS125-SF, ZNE250-SF, ZNS250-SF ③	◎
	ZNE400-NF, ZNS400-NF	◎

◎: Standard.
×: Not available.
Note ③: Can also be applied to circuits where overcurrent flows to the neutral wire. Can be used as a main circuit breaker for photovoltaic power generation systems.
For details see page 3-32.

6 Accessories

1 OCR for electronic breakers ····· 6-2
1 . TPOT type, TPOP type electronic OCR ····· 6-2
2 . XOU type electronic OCR ····· 6-6
3 . XOS type electronic OCR ····· 6-10
2 Internally mounted accessories ····· 6-14
1 . Overview ····· 6-14
2 . Connection diagrams and terminal numbers ····· 6-15
3 . Possible combinations ····· 6-16
4 . Ratings and operation data of auxiliary and alarm switches ··· 6-22
5 . Shunt trip device (SH) ····· 6-23
6 . Undervoltage trip device (UV) ····· 6-24
7 . Shunt Trip for Circuit Breaker with Earth Leakage Alarm (SH) ····· 6-27
8 . Circuit Breaker with Earth Leakage Alarm Option ····· 6-27
9 . Remote reset voltage at both ends and current at closed path ··· 6-28
10. Test lead voltage at both ends and current at closed path ··· 6-28
3 Externally mounted accessories ····· 6-29
1 . Overview ····· 6-29
2 . Toggle extension (HA) ····· 6-30
3 . Motor operators (MC) ····· 6-31
4 . External operating handles ····· 6-36
• Breaker-mounted (HB) ····· 6-36
• Door-mounted (HP) ····· 6-51
5 . Mechanical interlock ····· 6-63
• Slide interlock (MS) ····· 6-63
• Rear-connected interlock (MB) ····· 6-90
• Link interlock (ML) ····· 6-91
• Wire interlock (MW) ····· 6-102
6 . Toggle holder (HH) and toggle lock (HL) ····· 6-117
7 . Terminal covers CF/CR/CS ····· 6-119
8 . Interpole barriers (BA) ····· 6-124
9 . Terminal blocks (TF) ····· 6-125
10. Flush-mounted (flush plate) auxiliary circuit terminal block (TB) ··· 6-137
11. Plug-in auxiliary circuit terminal block ····· 6-147
12. DIN rail adapter ····· 6-152
13. Door Flange (DF) ····· 6-153

1. TPOT type, TPOP type electronic OCR

(1) Overcurrent trip characteristics

■ TPOT type, TPOP type OCR applicable model

Type of breaker	Rated Current (I_n) (A)
PS125-NE, PS125-PE	100, 125
PS250-NE, PS250-PE	250
PS400-NE, PS400-GE, PH400-CE	250, 400
PS630-NE, PS630-GE, PH630-CE	630

The TPOT electronic OCR is an overcurrent trip device with three elements: long time-delay trip, short time-delay trip, and instantaneous trip. It also has a preferential trip alarm function.
There are six dials to set the long time-delay trip time, short time-delay current, short time-delay time and instantaneous trip current. Two dials are assigned to allow the long time-delay trip current to be finely tuned. (125 A has one dial.)

The TPOP electronic OCR is an OCR with long time-delay trip, short time-delay trip, instantaneous trip, ground fault trip, and a preferential trip alarm function. And in the case of 4-pole products, N-phase protection feature is also provided.
It is set with seven dials, with one additional dial for ground fault trip ON/OFF. (125 A has six dials.) In the case of 4-pole products, the same dial is used for neutral protection pick-up current selection and ground fault trip ON/OFF.

In addition, since TPOT type electronic OCRs and TPOP type electronic OCRs use an r.m.s. value control method, the effects of harmonics do not cause any malfunction.

■ TPOP type electronic OCR for PS400-NE 3P

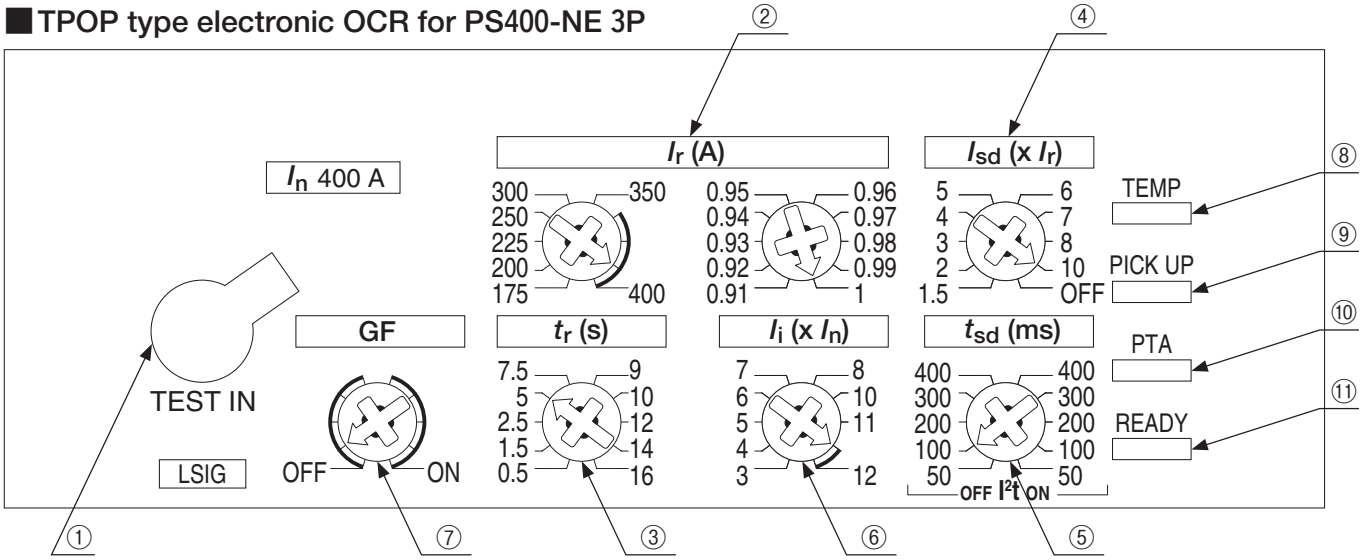

① A terminal for connecting the OCR checker.
② The rated current settigs is set with two dials: current value and magnification.
③ This is the long time-delay time settings dial.
④ This is the short time-delay pickup current dial.
⑤ This is the short time-delay time settings dial.
⑥ This is the instantaneous trip pick-up current dial.
⑦ This is the ground fault trip function ON/OFF dial.
⑧ Temperature LED
Lights red when the OCR ambient temperature reaches a high temperature of 105°C or higher.
⑨ Alarm LED
Lights red during long time-delay pickup.
During energisation at 105% × I_r to 112.5% × I_r: Flashing
During energisation at 112.5% × I_r or more: Lights
⑩ PTA LED
The preferential trip alarm flashes orange during pickup and lights when it is output.
⑪ Status LED
Lights green when the OCR is operating normally. Flashes orange if there is an error.

■Types of TPOT and TPOP types overcurrent trip devices (OCR)

Rated Current I_n (A)	Number of poles	OCR type	Protection code	Setting method	Protective functions			Alarm function
					Long time, Short time, Instantaneous	Ground fault	Neutral protection	Preferential trip alarm
					L, S, I	GF	NP	PTA ②
100 125	3 ①	TPOT	LSI	Six dial type ③	●	—	—	●
		TPOP	LSIG	Seven dial type ③	●	●	—	●
	4	TPOT	LSI	Six dial type ③	●	—	—	●
250 400 630	3 ①	TPOT	LSI	Six dial type	●	—	—	●
		TPOP	LSIG	Seven dial type	●	●	—	●
	4	TPOT	LSI	Six dial type	●	—	—	●
		TPOP	LSIG	Seven dial type	●	●	●	●

● : Supplied as standard — : "no" or "not available".

Note ①: 3-phase 4-wire systems cannot be used.

Note ②: Output contact is possible by connecting an optional cable (order type TPPHQTT130H).

Note ③: For 125A, there is no dial for I_r1, so the number of dials is reduced by one.

■OCR characteristics for PS400-NE

TPOP type OCR (LSIG) (I_n)=250A, 400A

Rated current settings (A) (I_r) = (I_r1)×(I_r2) ③	When (I_n)=250 A (I_r1) (A)=125, 150, 175, 200, 225, 250 adjustable When (I_n)=400A (I_r1) (A)=175, 200, 225, 250, 300, 350, 400 adjustable
	(I_r2)=0.91, 0.92, 0.93, 0.94, 0.95, 0.96, 0.97, 0.98, 0.99, 1.00
Long time-delay time settings (s) : (t_r)	0.5, 1.5, 2.5, 5, 7.5, 9, 10, 12, 14, 16 adjustable at (I_r)×600% Time-delay setting tolerance –20% –20ms or more +0% +30ms or less
Short time-delay pick-up current (A) : (I_{sd})	(I_r)×1.5, 2, 3, 4, 5, 6, 7, 8, 10 or OFF
	Current setting tolerance within ±10%
Short time-delay time settings (ms) : (t_{sd})	50, 100, 200, 300, 400 adjustable
	Ramp characteristics I^2t: ON or OFF However, definite time-delay characteristics with (I_r)×10 or more
	When (t_{sd}) = 50ms Time-delay setting tolerance –30 ms or more +30 ms or less When (t_{sd}) = 100 ms to 400ms Time-delay setting tolerance –20ms or more +50ms or less
Instantaneous trip pick-up current (A) : (I_i)	(I_n)×3, 4, 5, 6, 7, 8, 10, 11, 12 adjustable
	Current setting tolerance within ±15%
Neutral protection pick-up current (A) : (I_N)	For 3P OFF fixed ④
	For 4P (I_r)×50%, 100% or OFF ⑤
Neutral protection time settings (s) : (t_N)	Operates with long time-delay time setting (t_r) and short time-delay time setting (t_{sd}) and also operates with instantaneous trip ⑥
Ground fault trip pick-up current (A) : (I_g)	Settings for 3P 3ø3W and 4P 3ø4W (3P 3ø4W not supported) or OFF ⑦ (I_n)×20% Current setting tolerance within ±10%
Ground fault trip time settings (ms) : (t_g)	200 Time-delay setting tolerance –20ms or more +50ms or less ⑧
Preferential trip alarm pick-up current (A) : (I_p)	(I_r)×80% Current setting tolerance within ±10%
Preferential trip alarm time settings (s) : (t_p)	(t_r)×50% at (I_P)×600% Time-delay setting tolerance –20% –20ms or more +0% +30 ms or less

Notes:

③: The rated current settings (I_r) can be set by two dials, the current value (I_r1) and the magnification (I_r2). Trip operation is performed with a pick-up current value exceeding (I_r) × 1.05 and 1.2 or less.

④: There is no N-phase protection function for 3P.

⑤: N-phase protection is adjustable to 50% or 100% of the rated current setting (I_r). It is also possible to turn off the protection function. The N-phase protection setting dial also serves as the ON/OFF switch for ground fault trip. Trip operation is performed with a pick-up current value exceeding (I_N) × 1.05 and 1.2 or less.

⑥: There is no N-phase time setting dial. The ON/OFF of the ramp characteristics conforms to the short time-delay trip settings.

⑦: In the case of 4P, the ON/OFF switch for ground fault trip is shared with the dial for N-phase protection pick-up current.

⑧: The ON/OFF of the ground fault trip ramp characteristics conforms to the short time-delay trip settings. However, (I_n) × 1 or more with definite time-delay characteristics.

Remarks 1:
If not otherwise specified, the product will be delivered with the underlined standard setting values.

Remarks 2:
The TPOT type OCR (LSI) only has long time-delay trip, short time-delay trip, instantaneous trip, and preferential trip alarm.

■TPOT type, TPOP type OCR operation characteristic curves

Long time-delay trip, short time-delay trip characteristics

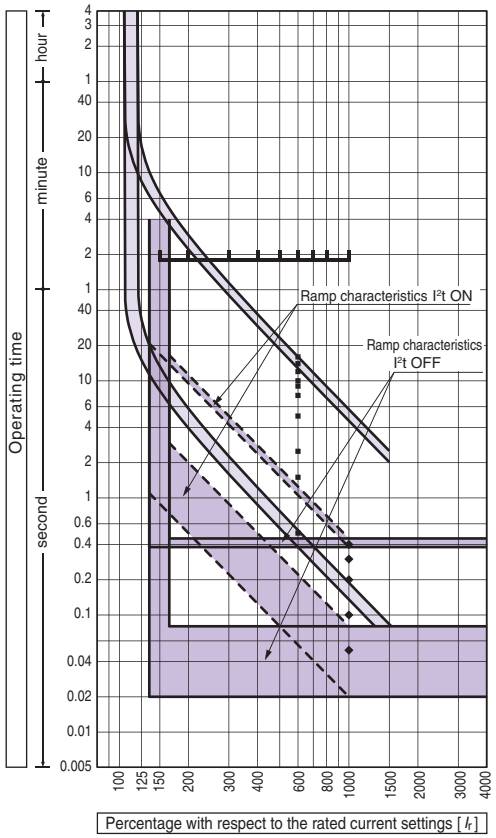

Instantaneous trip characteristics

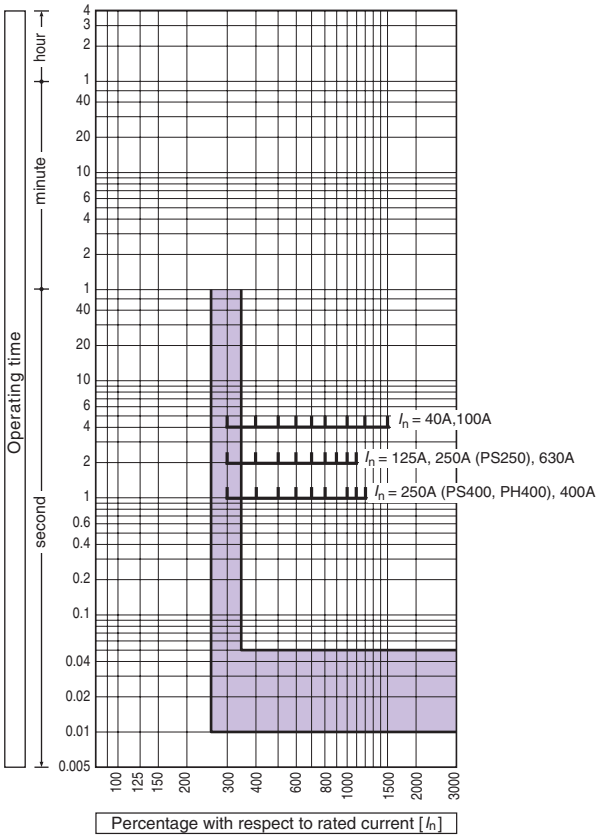

N-phase protection, preferential trip alarm characteristics

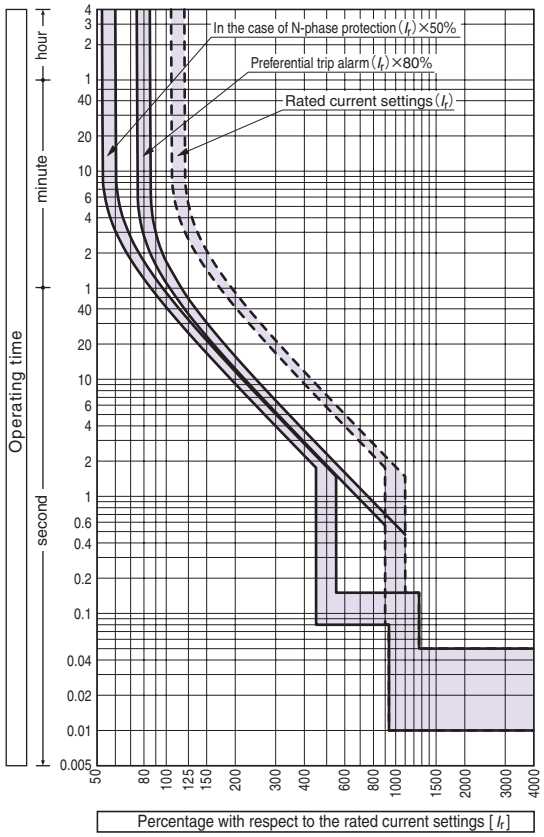

Ground fault trip characteristics

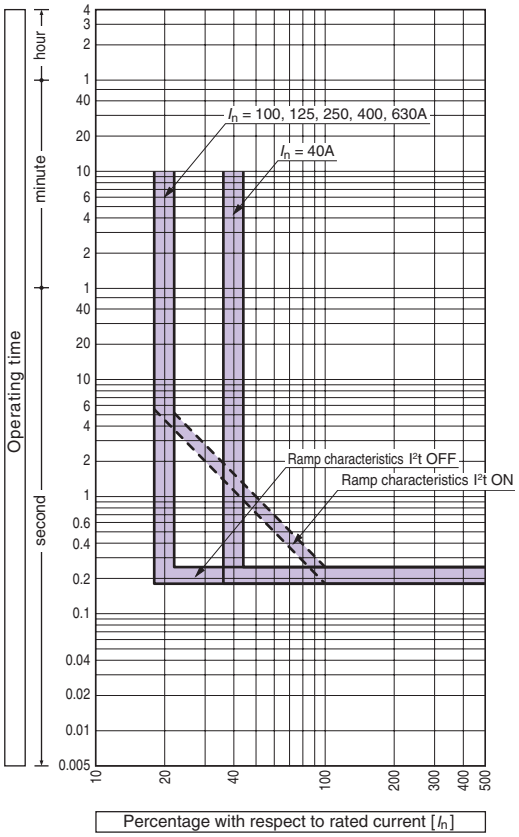

(2) Alarm function/protective function

■ Preferential trip alarm (PTA)

The load current is constantly monitored and if it exceeds the preferential trip alarm pick-up current I_p (= rated current setting (I_r) × 80%), the LED flashes and then the LED lights up and the contacts close at the operating times shown in the table below. If the load current becomes equal to or less than I_p, the LED turns off and the contacts open. Control power supply to the PTA is not required.

Long time-delay time setting t_r (s)		0.5	1.5	2.5	5.0	7.5	9.0	10	12	14	16
Estimated PTA operating time t_p (s)	For I_p × 200%	2.6	7.7	13	26	38	46	51	61	71	82
	For I_p × 600%	0.3	0.8	1.3	2.5	3.8	4.5	5.0	6.0	7.0	8.0
	For I_p × 720%	0.2	0.5	0.9	1.7	2.6	3.1	3.5	4.2	4.8	5.5

Contact rating

Output contact	Non-contact output 1a
	Contact capacity 24V AC/DC 100mA

By connecting the optional cable (order type TPPHQTT130H) to the PTA port, an alarm can be output using contact output (1a).

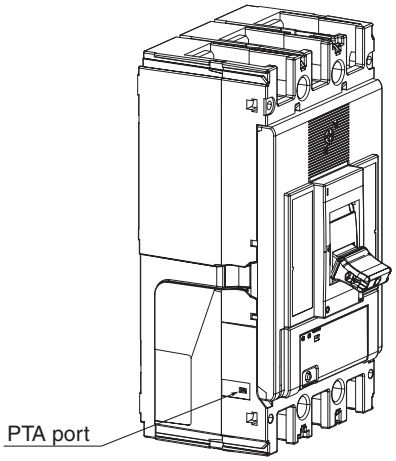

■ Ground fault trip (GF)

Protects equipment against fires caused by arc-ground fault currents. The ground fault trip current is set to 20% for rated current (I_n) of 100, 125, 250, 400 and 630 A and 40% for rated current (I_n) of 40 A.
Note: A 3-pole circuit breaker cannot be used with a 3-phase 4-wire system.

■ N-phase protection (NP)

A 4-pole circuit breaker can be used. This function protects against neutral wire overcurrent in a 3-phase 4-wire circuit. The N-phase protection pick-up current (I_N) can be switched to 100% or 50% of the rated current setting (I_r). It is also possible to turn off the N-phase protection function.

■ TTP00 type OCR checker

You can use the OCR checker to easily check the long time-delay, short time-delay, instantaneous trip, ground fault trip, and preferential trip alarm functions in the field. For details, see page 9-6.

2. XOU type electronic OCR

(1) Overcurrent trip characteristics

■ XOU type electronic OCR for H400-NE

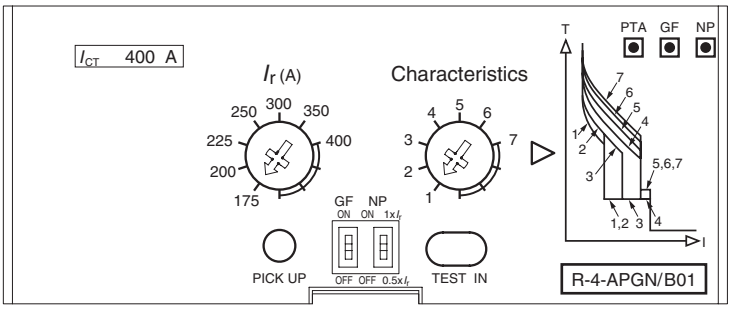

■ XOU type OCR Specifications

CT rated current (I_{CT})	poles	Protection code	Long time-delay, Short time-delay, Instantaneous	Preferential trip alarm (PTA)	Ground fault trip (GF)	Neutral protection (NP)
			A	P	G	N
250	3	A	●	—	—	—
	3	AP	●	●	—	—
	4	A	●	—	—	—
	4	AP	●	●	—	—
	4	AN	●	—	—	●
	4	APN	●	●	—	●
400 630 800 1000 1250 1600	3	A	●	—	—	—
	3	AP	●	●	—	—
	3	AG	●	—	●	—
	3	APG	●	●	●	—
	4	A	●	—	—	—
	4	AP	●	●	—	—
	4	AN	●	—	—	●
	4	APN	●	●	—	●
	4	AGN	●	—	●	●
	4	APGN	●	●	●	●

■ OCR characteristics for H400-NE

Characteristics No.		1	2	3	4	5	6	7
Rated current settings (A) : (I_r)		CT rated current : (I_{CT}) = 250A 125, 150, 175, 200, 225						
		CT rated current : (I_{CT}) = 400A 175, 200, 225, 250, 300, 350, 400						
Long time-delay time settings (s) : (t_r)		11	21	21	5	10	19	29
		at (I_r)×200%			at (I_r)×600%			
		Setting tolerance ±20%						
Short time-delay pick-up current (A) : (I_{sd})		2.5	2.5	5	10	10	10	10
		(I_r)× Setting tolerance ±15%						
Short time-delay time settings (s) : (t_{sd})		0.1	0.1	0.1	0.1	0.2	0.2	0.2
		Total clearing time +50ms, resettable time –20ms						
Instantaneous trip pick-up current (A) : (I_i)		(I_r)×1400% Max. (I_{CT}) × 1300% Setting tolerance ±20%						
Option	Preferential trip alarm							
	Pick-up current (A) : (I_p)	(I_r)×80% Setting tolerance±10%						
	Time-settings (s) : (t_p)	Definite time-delay characteristic, 40sec. Setting tolerance±10%						
	Ground falut trip							
	Pick-up current (A) : (I_g)	(I_{CT})×20% Setting tolerance±15% ①						
	Time-settings (s) : (t_g)	Difinite time-delay characteristic, 0.2sec. Total tripping time +50ms, resettable time –20ms.						
	Neutral protection							
	Pick-up current (A) : (I_N)	(I_r)×100% or 50% selectable ②						
	Time-settings (s) : (t_N)	(t_N)=(t_r) Same as Long time-delay time settings						

Notes:
①: Ground fault trip is not available when (I_{CT}) is 250A.
②: In case of (I_R)<(I_{CT}), the setting tolerance becomes big when (I_N) is set at (I_R)×50%.
Remarks: Characteristic No.4 will be applied as standard setting unless otherwise specified.

■ XOU type OCR Applicable breakers

Frame size (A)	Type of breaker
225	H225-NE
400	H400-NE, L400-NE
630	S630-NE, H630-NE, L630-NE
800	S800-NE, S800-RE, S800-PE, H800-NE, L800-NE
1000	S1000-CE
1250	S1250-NE, S1250-GE
1600	S1600-NE

XOU type electronic OCRs allow you to select a wide range of protection characteristics simply by setting two dials located on the front of the breakers; one for selecting the rated current and the other for selecting a protection characteristic. They are equipped with five to seven protection characteristics as standard, providing optimum protective coordination between upstream circuit breakers and downstream circuit breakers and/or loads.

Characteristic 1: For generator protection

Characteristics 2, 3 and 4: For general feeder protection.

The possibility of selecting one from three options makes it easy to achieve selective coordination with upstream or downstream breakers.

Characteristics 5, 6 and 7: For motor protection.

The selection of the option best suited to motor startup characteristics provides an optimum protection solution to motors.

If you require a characteristic which is not available as a preset on our standard electronic protection unit, send us the details and we will program a customized characteristic to your specification.

Note: Characteristic is programmable within certain limits. Contact us for details.

■ XOU type OCR Time/Current characteristic curves

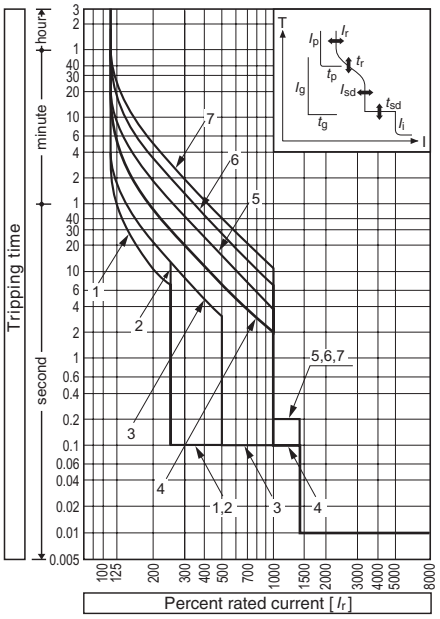

(2) Optional OCR functions

■ Preferential trip alarm (PTA)

The preferential trip alarm function causes the alarm LED to flash when the load current exceeds 80% of the rated current (IR) and, after 40 seconds, provides a contact output (1a). The contact output can be used to provide an alarm. The PTA function uses RMS sensing and hence does not suffer a malfunction due to harmonics. Control power and the OCR controller (supplied by Terasaki) are required to use this function.

Note ① : When the OCR controller is installed on the breaker, the breaker cannot be equipped with a terminal block for connection to the shunt trip device and undervoltage trip device.

● Specifications of OCR controller

Control voltage ② (Rated voltage)	100 – 120V AC or 200 – 240V AC
Power consumption, VA	2VA

Note ② : The control voltage must be 85 to 110% of the rated voltage. Please state the rated voltage when ordering.

Contact rating

Operating time (s) (t_p)	40 secs (fixed definite time-delay) setting tolerance is ±10%.			
Output contact	Contact output, (1a) lead wire standard. length (450mm)			
			Resistive load	Inductive load
	Rating of contact	250V AC	125VA (2A max)	20VA (2A max)
		220V DC	60W (2A max)	10W (2A max)
Tripped indication ①	Pick-up LED flickers			

Note ①: The pick-up LED flickers at a higher current than [I_P]. When higher current flows continuously for 40 secs, the contact (1a) is output. PTA is automatically reset at a lower current than [I_P].

● OCR controller connection diagram

Applicable breakers: H225

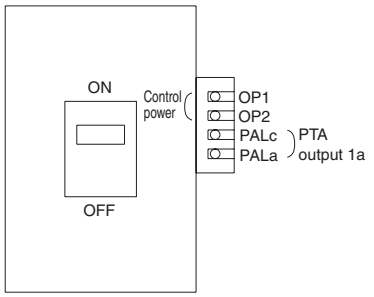

Note ③ : Separate installation of the OCR controller is not available. Flush-mounted type (FP) cannot be used.

Applicable breakers: H400, L400, S630, H630, L630, S800, H800, L800, S1000, S1250, S1600

OCR controller installed on the breaker

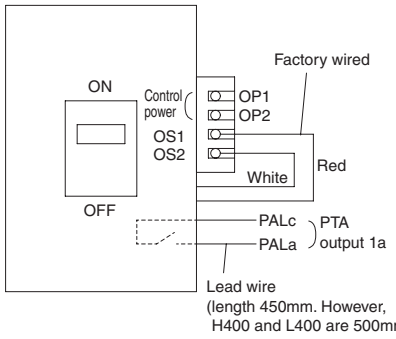

OCR controller installed external to the breaker

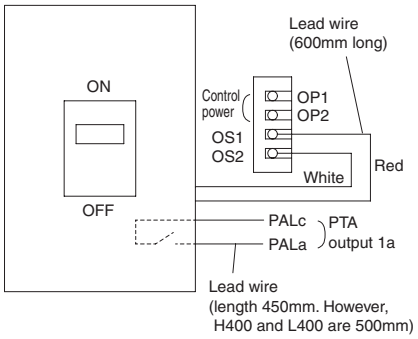

Note 4 : Standard installation of the OCR controller is on the right side of the breaker.
Separate installation is standard for the flush-mounted breakers.

(2) Optional OCR functions

- Mounting dimensions and terminal arrangement of the OCR controller installed on the breaker

Applicable breakers: H225

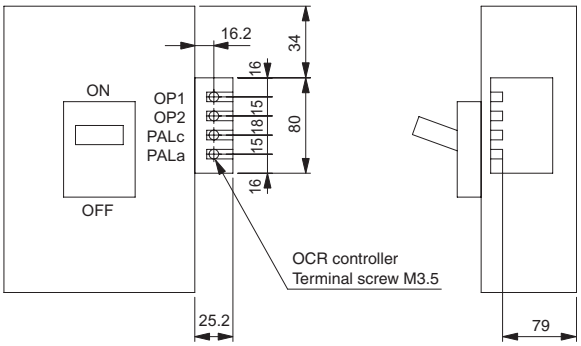

Notes: 1. Tightening torque of terminal screws M3.5: 0.9 – 1.2 Nm
2. Applicable wire size: 2.0 mm² max

Applicable breakers		A(mm)	B(mm)	C(mm)	D(mm)
H400, L400	3P、4P	71	111	25.2	16.2
S630, S800, S1000	3P、4P	62.5	74	25.2	16.2
H630, L630, H800, L800	3P、4P	62.5	111	25.2	16.2
S1250	3P	33	72	21	12
	4P	43	72	21	12
S1600	3P	33	92	21	12
	4P	43	92	21	12

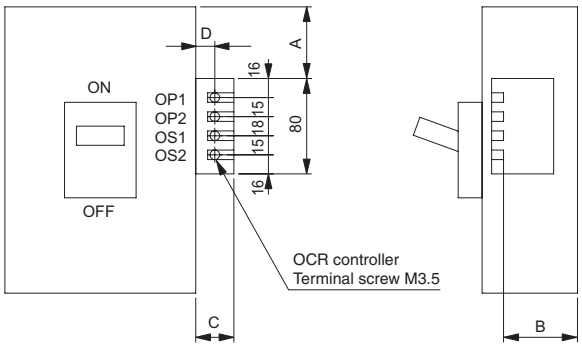

Notes: 1. Tightening torque of terminal screws M3.5: 0.9 – 1.2 Nm
2. Applicable wire size: 2.0 mm² max

- Outline of the OCR controller installed external to the breaker

Applicable breakers: H400, L400, S630, H630, L630, S800, H800, L800, S1000, S1250, S1600

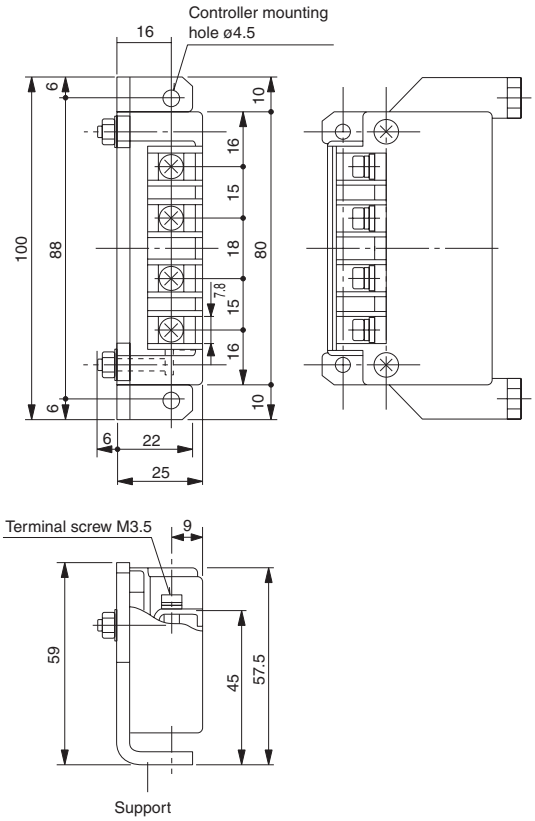

■ Ground fault trip (GF)

The ground fault trip pickup current is 20% of the CT rated current (I_{CT}). The GF function provides protection against fire that may be caused by arcing ground fault current. The GF function is not available when I_{CT} is 250A.

Note: Separate type neutral CT is required when the GF function is added to a 3-pole breaker used in a 3-phase, 4-wire system. Contact us for details.

■ N-phase protection (NP)

The NP function is available on 4-pole breakers and provides protection to the neural conductor in a 3-phase, 4-wire system against overcurrent The NP pick-up current (I_N) can be switched to 100% or 50% of the rated current setting (I_r). The NP protection function can also be turned off. However, in the case of H225, NP protection becomes (I_r) × 100% interlocking, and the protection function cannnot be turned off.

When (I_r) < (I_{CT}) , (I_N) = (I_r) × 50% setting will result in a large setting current error.

■ TNS-3 type OCR checker

You can use the OCR checker to easily check the OCR's long time-delay, short time-delay, instantaneous trip, ground fault trip and preferential trip alarm functions in the field. For details, see page 9-6.

(3) How to change the tripping characteristics

The electronic breakers are designed so that their protective functions, i.e., long time delay trip, short time delay trip, instantaneous trip, ground fault trip and preferential trip alarm functions, can be adjusted depending on a change in load or layout of power distribution lines.

Outer view

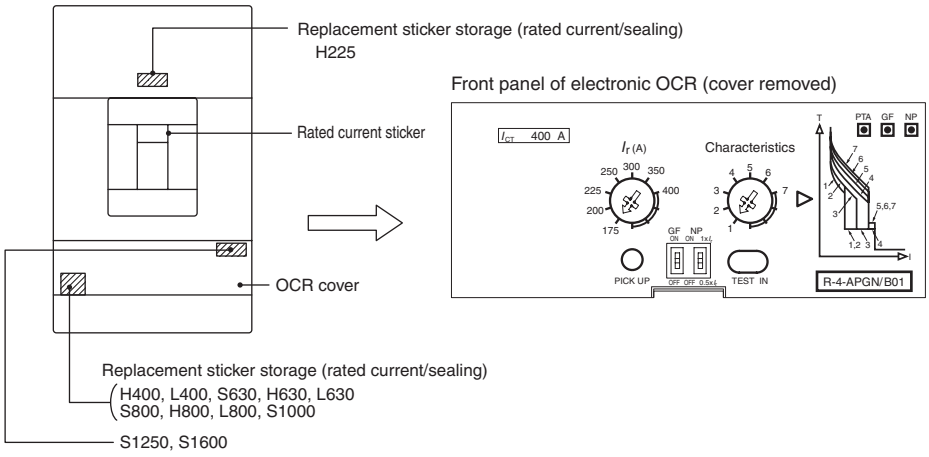

Item	Rated current	Long time delay trip, short time delay trip, instantaneous trip, ground fault trip, preferential trip alarm
Adjusting procedure	● **Turn the breaker to OFF position before changing the settings** 1. Peel the sealing sticker off and remove the cover. 2. Rotate the "I_r(A)" dial to the desired position using a flatblade screwdriver. 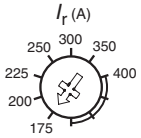 3. Take an appropriate rated current sticker and a sealing sticker from the replacement sticker storage. 4. Peel the existing rated current sticker off and affix the replacement rated current sticker. 5. Reinstall the cover and affix the replacement sealing sticker.	● **Turn the breaker to OFF position before changing the settings.** 1. Peel the sealing sticker off and remove the cover. 2. Rotate the "Characteristics" dial to the desired position using a flatblade screwdriver. 3. Take a sealing sticker from the replacement sticker storage. 4. Reinstall the cover and affix the replacement sealing sticker.

3. XOS type electronic OCR

(1) Overcurrent trip characteristics

■ XOS type electronic OCR for XS2500NE

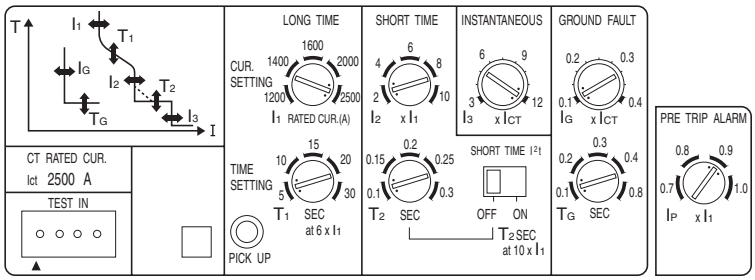

■ XOS type OCR Applicable breakers

Frame size (A)	Type of breaker
1000	**TL-1000NE**
1200	**TL-1200NE**
2000	**XS2000NE**
2500	**XS2500NE**
3200	**XS3200NE**

With XOS type electronic OCRs, the long time-delay trip, short time-delay trip, instantaneous trip, ground fault trip setting values can be independently changed.
You can set the ramp characteristics for short time-delay to facilitate selective coordination with downstream circuit breakers and fuses.
The ramp characteristics and the definite time-delay characteristics can be switched with the SHORT TIME I^2t switch in the OCR unit.

■ OCR characteristics for XS2500NE

CT rated current (A) : (I_{CT})	2500
Rated current settings (A) : (I_1)	1200, 1400, 1600, 2000, 2500
Long time-delay time settings (S) : (T_1)	(5–10–15–20–<u>30</u>) at (I_1) × 600% current Setting tolerance ±20%
Short time-delay pick-up current (A) : (I_2)	(I_1)×200、400、600、<u>800</u>、1000% adjustable Setting tolerance ±15%
Short time-delay time settings (S) : (T_2)	Opening time (0.1, 0.15, <u>0.2</u>, 0.25, 0.3) in the definite time-delay. Total clearing time is +50ms and resettable time –20ms for the time-delay settings
Instantaneous trip pick-up current (A) : (I_3)	Continuously adjustable from (I_{CT}) × 300 to <u>1200%</u>. Setting tolerance ±20%
Pre-trip alarm pick-up current (A) : (I_P) (optional)	(I_1)×70、80、<u>90</u>、100% adjustable Setting tolerance ±10%
Pre-trip alarm time setting (S) : (T_P) (optional)	40 fixed definite time-delay. Setting tolerance ±10%
Ground fault trip pick-up current (A) : (I_G) (optional) ⑥③	Continuously adjustable from (I_{CT}) ×10 to 40% Setting tolerance ±15%
Ground fault trip-time setting (S) : (T_G) (optional) ⑥③	Opening time (0.1, 0.2, 0.3, 0.4, <u>0.8</u>) in the definite time- delay. Total clearing time is +50ms and resettable time –20ms for the time-delay settings

Remarks: The underlined values will be applied as standard ratings unless otherwise specified when ordering.
Note ⑥③: Cannot be used with the preferential trip alarm.

■ XOS type OCR Time/Current characteristic curves

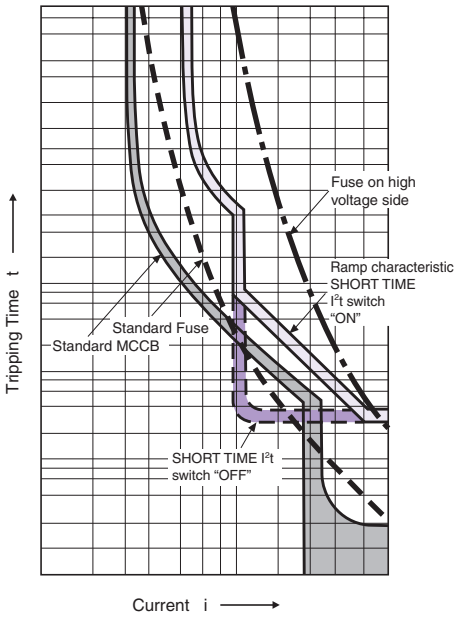

(2) Optional OCR functions

■ Preferential trip alarm (PTA)

The preferential trip alarm function causes the alarm LED to flash when the load current exceeds the pre-set current value and, after 40 seconds, provides a contact output (1a). The contact output can be used to provide an alarm. The PTA function uses RMS sensing and hence does not suffer a malfunction due to harmonics. Control power and the OCR controller (supplied by Terasaki) are required to use this function.

● PTA specifications

PTA pick-up current (I_P) 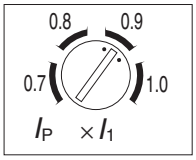	Adjustable steps of 70, 80, 90, 100% of the selected rated current [I_1]. Setting tolerance ±10% Note: The long time-delay trip does not operate 'first' when the pick-up current is adjusted to 100% of the rated current [I_1].			
Operating time (S)(T_P)	40 secs (fixed definite time-delay) setting tolerance is ±10%.			
Output contact	Contact output, (1a) lead wire standard length (450mm)			
			Resistive load	Inductive load
	Rating of contact	250V AC	125VA (2A max)	20VA (2A max)
		220V DC	60W (2A max)	10W (2A max)
Tripped indication ①	Pick-up LED flickers			

Note ①: The pick-up LED flickers at a higher current than [I_P]. When higher current flows continuously for 40 secs, the contact (1a) is output. PTA is automatically reset at a lower current than [I_P].

● PTA Characteristics

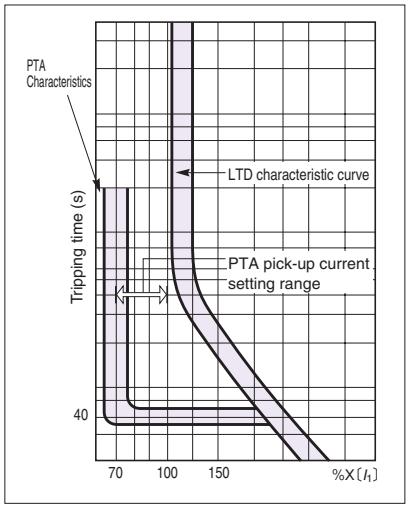

● OCR controller (PTA and trip indication)

The OCR controller is installed in the left hand of the breaker (standard). This can also be installed externally to the breaker (please specify when ordering).

● Specifications of OCR controller

Power voltage ② (Rated voltage)	100 – 120V AC or 200 – 240V AC
Power consumption, VA	2VA

Note ② : The control voltage must be 80 to 110% of the rated voltage. Please state the rated voltage when ordering.

● Outline of the OCR controller installed external to the breaker

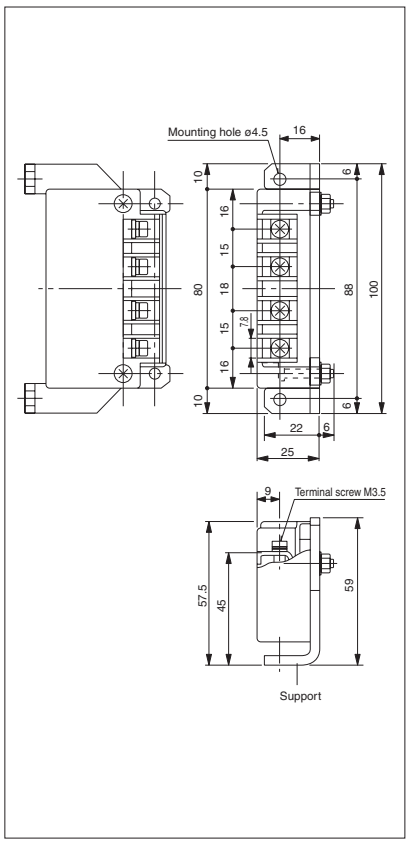

● OCR controller connection diagram

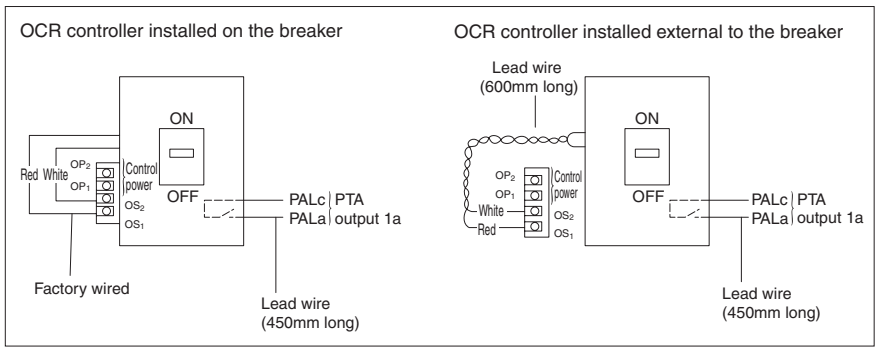

● Mounting dimensions and terminal arrangement of the OCR controller installed on the breaker

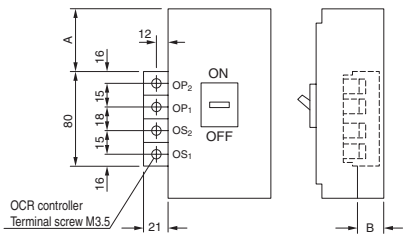

Dimension table (mm)

Type of MCCB	A		B
	With UVT contoroller	Without UVT contoroller	
TL-1000NE TL-1200NE	51	114	92
XS2000NE XS2500NE XS3200NE	54	180	115

Remarks 1): Standard torque for the terminal screws M3.5 ····· 0.9 – 1.2Nm
2): Applicable cable size ····· Max. 2.0mm²

(2) Optional OCR functions

■ Ground fault trip (GF)

The ground fault trip pickup current is 10 to 40% of the CT rated current (I_{CT}).
The GF function provides protection against fire that may be caused by arcing ground fault current.
Note that a separate type neutral CT is required when the GF function is added to a 3-pole breaker used in a 3-phase, 4-wire system. Contact us for details.

● GF Specifications

GF Pick-up current (A) (I_G) 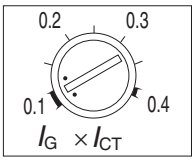	Continuously adjustable from 10 to 40% of the rated CT current [I_{CT}]. Setting tolerance ±15%
GF Time-delay (S) (T_G) 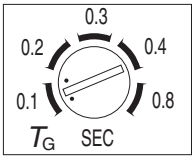	The GFT has a definite time-delay characteristic and is adjustable in steps of 0.1, 0.2, 0.3, 0.4 and 0.8s. Total clearing time is +50ms and resettable time is –20ms for the pre-set timedelay.

Note: See Chapter 7, "Characteristics and Outline Dimensions" for CT rated currents (I_{CT}).

● GF characteristics

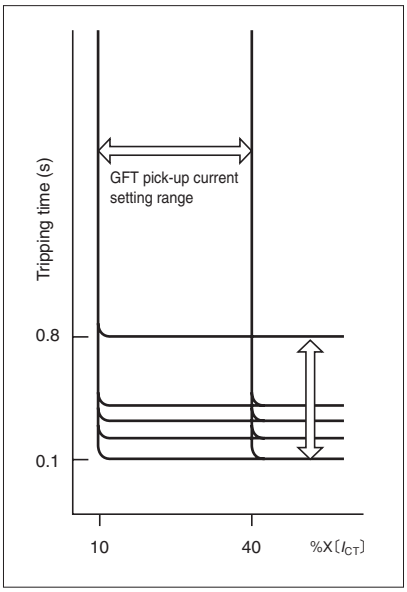

■ Trip indicators

The LEDS, when lit, indicate which trip function tripped the breaker; Long time-delay (LTD), short time-delay/instantaneous (ST/INST) or ground fault (GF). (control power required)
If a pre-trip alarm (PTA) is fitted, the LED control power can be used (common). See page 6-11 for PTA.
This is not applicable to high instantaneous trip breakers (See page 4-4).

Trip indicator display

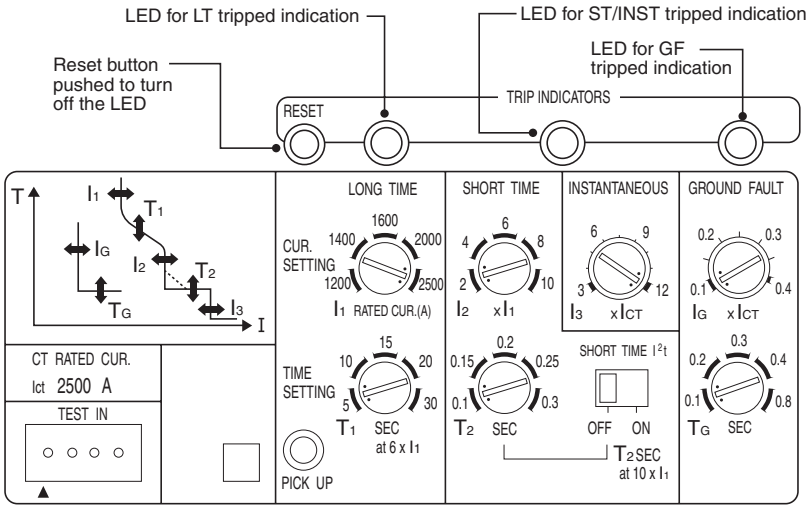

Example XS2500NE

■TNS-3 type OCR checker

You can use the OCR checker to easily check the OCR's long time-delay, short time-delay, instantaneous trip, ground fault trip, and preferential trip alarm functions in the field. For details, see page 9-6.

(3) How to change the tripping characteristics

The electronic breakers are designed so that their protective functions, i.e., long time delay trip, short time delay trip, instantaneous trip, ground fault trip and preferential trip alarm functions, can be adjusted depending on a change in load or layout of power distribution lines.

Outer view

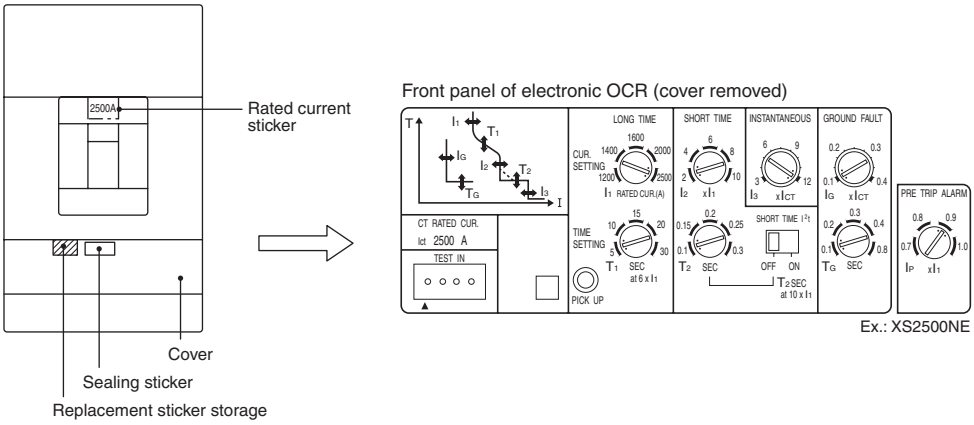

Item	Rated current	Long time delay trip, short time delay trip, instantaneous trip, ground fault trip, preferential trip alarm
Adjusting procedure	● **Turn OFF the breaker before changing the settings.** 1. Peel the sealing sticker off, loosen the cover mounting screws and remove the cover. 2. Rotate the "RATED CUR. (A)" dial using a flatblade screwdriver so that the black dots to be aligned to the desired position. 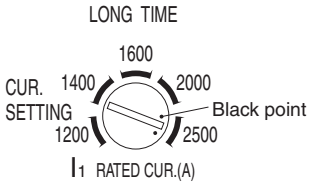 (Ex.: XS2500NE) 3. Take an appropriate rated current sticker and a sealing sticker from the replacement sticker storage. 4. Peel the existing rated current sticker off and affix the replacement rated current sticker. 5. Reinstall the cover and affix the replacement sealing sticker.	● **Turn OFF the breaker before changing the settings.** 1. Peel the sealing sticker off, loosen the cover mounting screws and remove the cover. 2. Rotate the each dial using a flatblade screwdriver so that the black dots to be aligned to the desired position. The instantaneous trip and ground fault trip pickup current can be continuously adjusted. 3. Take a sealing sticker from the replacement sticker storage. 4. Reinstall the cover and affix the replacement sealing sticker.

1. Overview

The following internally mounted accessories are available. See the tables of possible combinations of internally mounted accessories on pages 6-16 for the number of accessories that can be installed per breaker and their locations.

AL	Alarm switch
Provides an electrical indication that the breaker is in a tripped state.	

AX	Auxiliary switch
Provides an electrical indication that the breaker is in a ON or OFF state.	

SH	Shunt trip device
Electrically trips the breaker open from a remote location.	

UV	Undervoltage trip device
Trips the breaker open when the circuit voltage lowers. This device can also be used to trip the breaker open from a remote location.	

Caution: Combined use of SH and UV is not available.

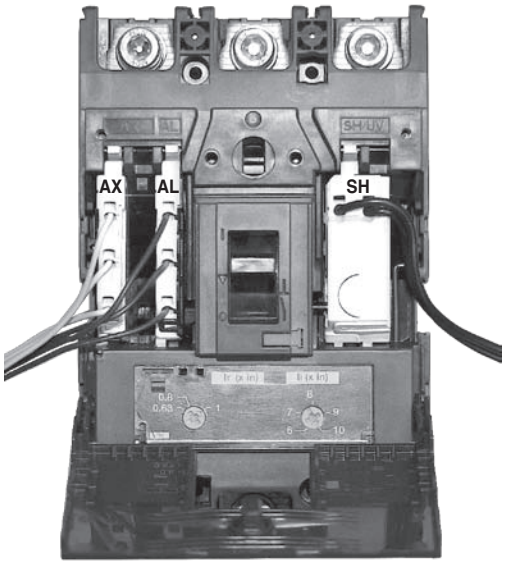

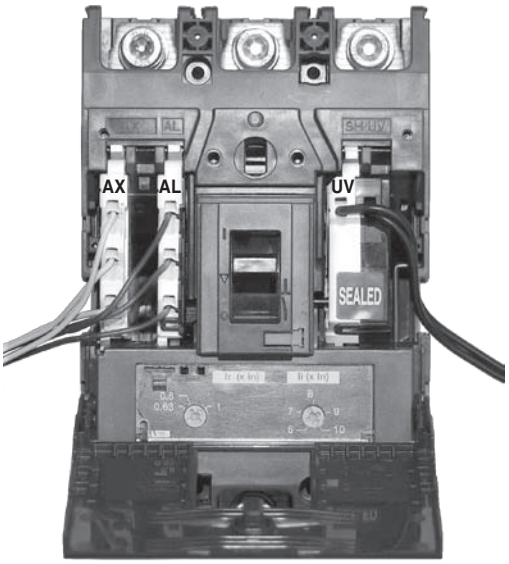

Termination or ending of lead wires from accessories

There are three manners in which lead wires from accessories are ended or terminated, as shown below:

Lead wires are open

- Standard lead wire ending manner for front-connected, rear-connected and flush-mounted breakers. Lead wires from accessories are derived vertically, thereby enabling close fitting mounting. Excludes some models. For details, see 5-22.
- **Lead wire specifications**

TemBreak PRO Series for 100A to 1600A frames

Accessory	Grade	Size	Finished OD	Length	Colour
SH	Heat resistant	0.5 mm²	3 mm ø	500 mm	Black
UV			3 mm ø	500 mm	Black
AX			1.8 mm ø	700 mm	Grey
AL			1.8 mm ø	700 mm	Black

Motor breakers for 30 A to 100 A frames, earth leakage circuit breakers for motor protection
(E30-NM, S30-NM, E50-NM, S50-NM, E100-NM, ZE30-NM, ZS30-NM, ZE50-NM, ZS50-CM, ZE100-NM)

Accessory	Grade	Size	Finished OD	Length	Colour
SH	Heat resistant	0.34 mm²	1.58 mm ø	500 mm	Black
AX			1.58 mm ø	500 mm	Grey
AL			1.58 mm ø	500 mm	Black

Note: UV undervoltage trip is only for the terminal block.

X, TL series
(XS2000NE/NN, XS2500NE/NN, XS3200NE/NN, TL-1000NE, TL-1200NE)

Accessory	Grade	Size	Finished OD	Length	Colour
SH	Heat resistant	0.5 mm²	3 mm ø	450 mm	Black
UV			3 mm ø	450 mm	Black
AX			1.8 mm ø	450 mm	Grey
AL			1.8 mm ø	450 mm	Black

Lead wires are terminated in a terminal block (TF)

- Optional lead wire termination manner for front-connected and rear-connected breakers.
- See page 6-125 to 6-136 for details on the lead wire terminal block.

With flush-mounted auxiliary circuit terminal block (TB)

- Optional lead wire termination manner for flush-mounted breakers.
- See page 6-137 to 6-146 for the standard.

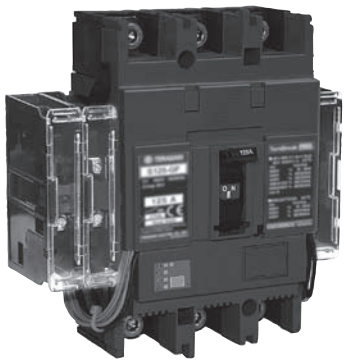

Lead wires are ended at auxiliary circuit (self-engaging) terminals

- Standard lead wire ending manner for plug-in breakers.
- See page 6-147 to 6-151 for the standard arrangement of auxiliary circuit terminals.

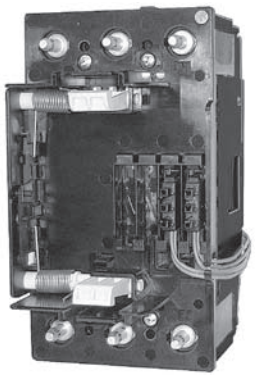

2. Connection diagrams and terminal numbers

Accessory	Combination symbol	Connection diagrams and terminal numbers	Remarks
Shunt trip device (SH)		• With anti-burn switch C2 C1 C2/S2 C1/S1	See page 6-23 for applicable models.
		• With anti-burn switch S2 (–) S1 (+)	See page 6-23 for applicable models.
	Mounted on the side of the circuit breaker	• Without anti-burn switch C2 C1 C2/S2 C1/S1	See page 6-23 for applicable models. Shunt trips are continuous rating without anti-burn switches.
Undervoltage trip devic (UV)	Mounted on the side of the circuit breaker	D1 D2	Undervoltage trip for the model other than below.
		For AC With UVT controller UC1 UC2 Controller P1 P2 Without UVT controller U1 U2 For DC U1 U2	For X, TL type undervoltage trip. For AC UVT, a separate UVT controller is required for some models. See page 6-25.
Auxiliary switch (AX)		12/AXb1 14/AXa1 11/AXc1	1pc Aux. SW installed.
		12/AXb1 14/AXa1 11/AXc1 22/AXb2 24/AXa2 21/AXc2	2pcs Aux. SW installed.
		12/AXbL 14/AXaL 11/AXcL 22/AXbR 24/AXaR 21/AXcR	2pcs Aux. SW installed. The auxiliary switches are mounted on the left and right sides, so the lead wires pulled out from the left and right-hand sides.
		12/AXb1 14/AXa1 11/AXc1 22/AXb2 24/AXa2 21/AXc2 32/AXb3 34/AXa3 31/AXc3 42/AXb4 44/AXa4 41/AXc4	4pcs Aux. SW installed.
		AXb1 AXa1 AXc1 AXb2 AXa2 AXc2 AXb3 AXa3 AXc3 AXb4 AXa4 AXc4 AXb5 AXa5 AXc5 AXb6 AXa6 AXc6	6pcs Aux. SW installed. For X, TL type auxiliary switches.
Alarm switch (AL)		92/ALb1 94/ALa1 TRIP 91/ALc1	1pc Alarm. SW installed.
		92/ALbL 94/ALaL TRIP 91/ALcL 02/ALbR 04/ALaR TRIP 01/ALcR	2pcs Alarm. SW installed. For motor circuit breakers except for S250-SM and earth leakage circuit breakers for motor protection except for ZS100-SM and ZS250-SM.
		92/ALb1 94/ALa1 TRIP 91/ALc1 02/ALb2 04/ALa2 TRIP 01/ALc2	2pcs Alarm. SW installed. Compatible with the model other than the above.
		ALb1 ALa1 TRIP ALc1	For X and TL series. Alarm SW for X and TL series.
Test lead (TL)		TL Test button TL	Remotely electrically trip an earth leakage circuit breaker or a circuit breaker with single 3-phase neutral wire open phase protection. Do not apply an external voltage to the test lead wires because voltage is applied to them. Connect a switch that can switch the voltage and current listed on page 6-28 without any difficulty. Also, do not share the switch with other earth leakage circuit breaker test lead wires.
Megger test switch (MG)		Line side Megger test switch	It is linked to the main contact of the earth leakage circuit breaker and when the handle is turned OFF or tripped, the control circuit is automatically de-energized to allow for load-side interphase Megger measurement.

3. Possible combinations

Moulded Case Circuit Breakers

Economical series
Standard series
Current limiting series
Motor protection series
Switch disconnectors

	TemBreak 2	TemBreak PRO					
Type: E	E30-NM, E50-NM, E100-NM	PE30-NF/NN, PE50-NF/NN, PE60-NF, PE125-NF/NN	PE30-NF/NN, PE50-NF/NN, PE60-NF, PE125-NF/NN				
Type: S	S30-NM, S50-NM	PS30-NF, PS50-NF, PS60-NF, S50-SF, S125-SF	PS30-NF, PS50-NF, PS60-NF, S50-SF, S125-SF/SN	PS50-PF, PS125-NF/PF	PS50-PF, PS125-NF/PF, PS125-NE/PE, PS125-NN	S100-GF, S125-GF	S100-GF, S125-GF
Type: H							H100-NF, H125-NF, H225-NF/NE, H250-NF
Type: L							L100-NF, L125-NF, L225-NF, L250-NF
Number of poles ①	3 ②④	2	3 ②	2	3 ②	2	3
Combinations of accessories: AX							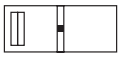
AL							
SH	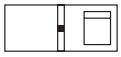		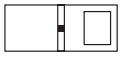		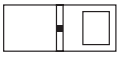		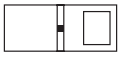
UV	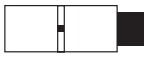						
AX–AL							
AX–SH	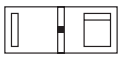		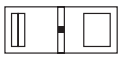		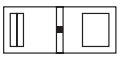		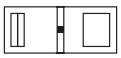
AX–UV	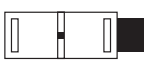						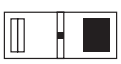
AL–SH							
AL–UV							
AX–AL–SH							
AX–AL–UV							

Notes:
①: For the four-pole type, see the column for the three-pole type.
②: For auxiliary switches or alarm switches, left-hand mounting has priority.
④: Undervoltage trip UVTs are mounted on the side of the circuit breaker. See page 6-24 for the outline dimensions.

Moulded Case Circuit Breakers

Economical series
Standard series
Current limiting series
Motor protection series
Switch disconnectors

		TemBreak PRO					
Type	E		E250-SF	E400-NF			
	S	PS250-PF/NN, PS250-NE/PE	S250-SF, S250-SM, S250-SN		PS400-CF/NF/NE, PS400-GF/GE, PS400-NN, PS630-CF/NF/NE, PS630-GF/GE, PS630-NN	S630-CF/NF/NE, S630-GN, S800-CF/NF/NE, S800-RF/RE/PF/PE, S800-NN, S1000-CE/NN	S1250-NE/GE/NN, S1600-NE/NN
	H			H400-NE	PH400-CF/CE PH630-CF/CE	H630-NE, H800-NE	
	L			L400-NE		L630-NE, L800-NE	
Number of poles ①		3 ②	3 ②	3	3 ②	3 ②	3
Combinations of accessories	AX	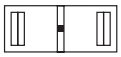	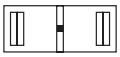	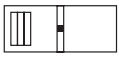	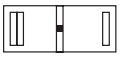	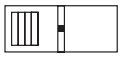	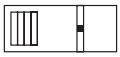
	AL						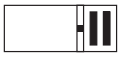
	SH	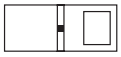	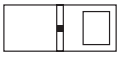	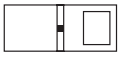	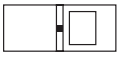	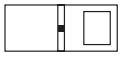	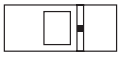
	UV						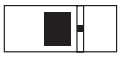
	AX–AL						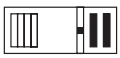
	AX–SH	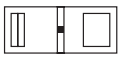	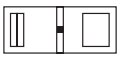	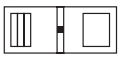	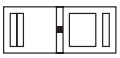	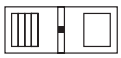	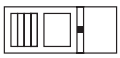
	AX–UV						
	AL–SH	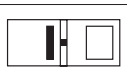	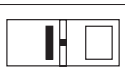	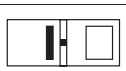	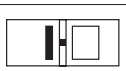		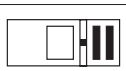
	AL–UV						
	AX–AL–SH						
	AX–AL–UV						

Notes:
①: For the four-pole type, see the column for the three-pole type.
②: For auxiliary switches or alarm switches, left-hand mounting has priority.

3. Possible combinations

Moulded Case Circuit Breakers

Standard series
Current limiting series
Motor protection series

		X, TL series	
Type	XS		XS2000NE/NN, XS2500NE/NN, XS3200NE/NN
	TL	TL-1000NE, TL-1200NE	
	XM		
Number of poles ①		3 ③	3 ③
Combinations of accessories	AX		
	AL		
	SH		
	UV		
	AX–AL		
	AX–SH		
	AX–UV		
	AL–SH		
	AL–UV		
	AX–AL–SH		
	AX–AL–UV		

Notes:
①: For the four-pole type, see the column for the three-pole type.
③: A breaker with AC UVT is provided with an external UVT controller. See page 6-25.
⑥: Simultaneous mounting of AL–SH is possible as an option.

Moulded Case Circuit Breakers

Circuit Breaker with earth leakage alarm
for distribution boards and control boards

		TB series	
Type		TB50KSL	TB50KSZ, TB100KSZ ⑥
Number of poles ①		2	3
Combinations of accessories	AX		
	AL		
	SH		
	MG		
	AX–AL		
	MG–AL		

Moulded Case Circuit Breakers

Circuit Breaker with earth leakage alarm

	TemBreak PRO					
Type E	PE50-NFZ, PE125-NFZ			ZAE250-SF	ZAE400-NF	
Type S	PS50-NFZ	ZAS125-SF	ZAS50-GF, ZAS100-GF, ZAS125-GF, ZAS225-GF, ZAS250-GF	ZAS250-SF	ZAS400-NF/GF	ZAS630-CF/NF, ZAS800-CF/NF
Number of poles ④	3	3	3	3	3	3
Combinations of accessories: AX						
AL						
SH		⑤	⑤	⑤		
AX – AL						
AX – SH		⑤	⑤	⑤		
AL – SH		⑤	⑤	⑤		
AX – AL – SH		⑤	⑤	⑤		
MG						
MG – AX						
MG – AL						
MG – AX – AL						
MG – AX – AL – SH						
TL						

Notes:

②: For auxiliary switches or alarm switches, left-hand mounting has priority.

④: For the four-pole type, see the column for the three-pole type.

⑤: Custom-built product. See page 6-27 for details.

*: SHT for **ZAE400, ZAS400, ZAS630** and **ZAS800** are factory installed.

3. Possible combinations

Moulded Case Circuit Breakers

Single phase 3-wire circuit breaker with neutral phase open protection

Earth Leakage Circuit Breakers

Economical series
Standard series
Earth Leakage Circuit Breakers for motor protection
Single phase 3-wire earth leakage circuit breaker with neutral phase open protection
Earth Leakage Circuit Breakers for distribution boards and control boards

		TemBreak PRO		TemBreak 2		
Type	MCCB E	PE50-NFN, PE125-NFN				
	ELCB E	PZE50-NFN, PZE125-NFN	PZE30-NF, PZE50-NF, PZE60-NF, PZE125-NF	ZE30-NM, ZE50-NM, ZE100-NM	TZ30EC, TZ50EE	TZ30EC, TZ50EE, TZ100EC
	ELCB S		PZS30-NF, PZS50-NF, PZS60-NF	ZS30-NM, ZS50-CM		
Number of poles		3	3	3 ②③④	2	3
Combinations of accessories	AX					
	AL					
	SH ③					
	UV					
	AX AL					
	AX SH					
	AX UV					
	AL SH					
	AL UV					
	AX AL SH					
	AX AL UV					
	MG					
	MG AX					
	MG AL					
	MG AX AL					
	TL					
	TL AX					
	TL AL					
	TL AX AL					
	LAL					

Notes:
②: For auxiliary switches or alarm switches, left-hand mounting has priority.
③: SHTs are mounted on the side of the circuit breaker. See page 6-23 for the outline dimensions. For DC, comes with an anti-burn switch.
④: Undervoltage trip UVTs are mounted on the side of the circuit breaker. See page 6-24 for the outline dimensions.

Moulded Case Circuit Breakers

Single phase 3-wire circuit breaker with neutral phase open protection

Earth Leakage Circuit Breakers

Economical series
Standard series
Earth Leakage Circuit Breakers for motor protection
Single phase 3-wire earth leakage circuit breaker with neutral phase open protection

		TemBreak PRO				
Type	MCCB E			NE250-SF	NE400-NF	
	ELCB E			ZE250-SF, ZNE250-SF	ZE400-NF, ZNE400-NF	
	MCCB S	NS125-SF, NAE125-SF＊, NAS125-SF＊		NS250-SF, NAE250-SF＊, NAS250-SF＊	NS400-NF, NAE400-NF＊, NAS400-NF＊	NS630-NF, NS800-NF
	ELCB S	ZS50-SF, ZS125-SF, ZS100-SM, ZNS125-SF	ZS100-GF, ZS125-GF, ZS225-GF, ZS250-GF	ZS250-SF, ZS250-SM, ZNS250-SF	ZS400-NF/GF, ZNS400-NF	ZS630-CF/NF, ZS800-CF/NF
Number of poles		3	3	3	3	3
Combinations of accessories	AX					
	AL					
	AX AL					
	MG					
	MG AX					
	MG AL					
	MG AX AL					
	MG TL					
	MG TL AX					
	MG TL AL					
	MG TL AX AL					
	TL					
	TL AX					
	TL AL					
	TL AX AL					

＊: Test Lead (TL) is not applicable

6 Accessories

4. Ratings and operation data of auxiliary and alarm switches

(1) Ratings of AX and AL

- The applicable load of the switch shall be no larger than the rating and no smaller than the minimum load.

Type of breaker		Standard							For microload ①		
		AC(V)			DC(V)			Minimum load	DC(V)		Minimum load
Moulded Case Circuit Breakers	Earth Leakage Circuit Breakers	Voltage (V)	Current (A) Resistive load	Current (A) Inductive load	Voltage (V)	Current (A) Resistive load	Current (A) Inductive load		Voltage (V)	Current (A) Resistive load	
E30-NM, S30-NM, E50-NM, S50-NM, E100-NM	**ZE30-NM, ZS30-NM, ZE50-NM, ZS50-CM, ZE100-NM**	480	—	—	250	0.3	0.3	DC5V 160mA DC30V 30mA	30	0.1	DC5V 1mA DC30V 1mA
		250	5	5	125	0.6	0.6				
		125	5	5	30	3	3				
PE30-NF/NN, PS30-NF, PE50-NF/NN/NFZ/NFN, PS50-NF/NFZ, PE60-NF, PS60-NF, PE125-NF/NN/NFZ/NFN, S50-SF, S125-SF, S125-SN, ZAS125-SF, NS125-SF, PS50-PF, PS125-NF/PF/NN, PS125-NE/PE, ZAS50-GF, ZAS100-GF, ZAS125-GF, E250-SF, S250-SF, S250-SM, S250-SN, ZAE250-SF, ZAS250-SF, NE250-SF, NS250-SF, PS250-PF/NN, PS250-NE/PE, S100-GF, S125-GF, H100-NF, H125-NF, H225-NF, H225-NE, H250-NF, L100-NF, L125-NF, L225-NF, L250-NF, ZAS225-GF, ZAS250-GF, E400-NF, PS400-CF/NF/GF/NN, PS400-NE/GE, PH400-CF, PH400-CE, H400-NE, L400-NE, ZAE400-NF, ZAS400-NF/GF, NAE125-SF, NAS125-SF, NAE250-SF, NAS250-SF, NAE400-NF, NAS400-NF, NE400-NF, NS400-NF, NS630-NF, NS800-NF, PS630-CF/NF/GF/NN, PS630-NE/GE, PH630-CF, PH630-CE, S630-CF/NF/NE/GN, ZAS630-CF/NF, H630-NE, L630-NE, S800-CF/NF/RF/PF/NN, S800-NE/RE/PE, H800-NE, L800-NE, ZAS800-CF/NF, S1000-CE/NN, S1250-NE/GE/NN, S1600-NE/NN	**PZE30-NF, PZS30-NF, PZE50-NF/NFN, PZS50-NF, PZE60-NF, PZS60-NF, PZE125-NF/NFN, ZS50-SF, ZS125-SF, ZS100-SM, ZNS125-SF, ZS100-GF, ZS125-GF, ZE250-SF, ZS250-SF, ZS250-SM, ZNE250-SF, ZNS250-SF, ZS225-GF, ZS250-GF, ZE400-NF, ZS400-NF/GF, ZNE400-NF, ZNS400-NF, ZS630-CF, ZS630-NF, ZS800-CF, ZS800-NF**	480	—	—	250	—	—	DC15V 100mA	30	0.1	DC5V 1mA
		250	3	2	125	0.4	0.05				
		125	3	2	30	3	2				
—	**TZ30EC, TZ50EE, TZ100EC**	250	2	0.6	125	0.3	0.03	DC5V 100mA DC24V 60mA	—	—	—
		125	3	2	30	2	1.5				
XS2000NE/NN, XS2500NE/NN, XS3200NE/NN, TL-1000NE, TL-1200NE	—	480	3	2	250	0.3	0.3	DC5V 160mA DC30V 26.7mA	30	0.1	DC5V 1mA DC30V 1mA
		250	5	5	125	0.6	0.6				
		125	5	5	30	5	4				

Note: ① This is a custom-built product. When ordering for this product, specify that it is intended for microlead use.
Remarks: The inductive load means power factor of no smaller than 0.4 for AC and time constant of no larger than 7 ms for DC.

(2) Operation of AX and AL

Switch	Breaker status	"ON"	"OFF"	"TRIP"
Auxiliary switch (AX) status		11/AXc — 14/AXa "Closed" 11/AXc — 12/AXb "Open"	11/AXc — 14/AXa "Open" 11/AXc — 12/AXb "Closed"	11/AXc — 14/AXa "Open" 11/AXc — 12/AXb "Closed"
Alarm switch (AL) status		91/ALc — 94/ALa "Open" 91/ALc — 92/ALb "Closed"	91/ALc — 94/ALa "Open" 91/ALc — 92/ALb "Closed"	91/ALc — 94/ALa "Closed" 91/ALc — 92/ALb "Open"

(3) Circuit breakers with earth leakage alarm Rating of earth leakage alarm output contact

Circuit breaker with earth leakage alarm type	Voltage	cosø =1	cosø =0.4 L/R =0.007	Switch
PE50-NFZ, PS50-NFZ, PE125-NFZ, ZAS50-GF, ZAS125-SF, ZAS100-GF, ZAS125-GF, ZAE250-SF, ZAS250-SF, ZAS225-GF, ZAS250-GF, ZAE400-NF, ZAS400-NF/GF, ZAS630-CF/NF, ZAS800-CF/NF, NAE125-SF, NAS125-SF, NAE250-SF, NAS250-SF, NAE400-NF, NAS400-NF	125V AC	3A	2A	
	250V AC	3A	2A	
	30V DC	2A	2A	
	100V DC	0.4A	0.3A	
TB50KSZ, TB100KSZ	125V AC	3A	2A	
	250V AC	3A	2A	
	30V DC	2A	2A	

5. Shunt trip device (SH)

(1) Ratings of SHT

Type of breaker	Peak exciting current, (A)							Connection diagrams and terminal numbers
Moulded Case Circuit Breakers	Rated voltage	AC (V)			DC (V)				
		100-120	200-240	380-450	24	48	100-120	200-240	
E30-NM, S30-NM, E50-NM, S50-NM, E100-NM		1.5	0.75	0.53	—	—	1.5 ①	—	C2/S2 C1/S1 With anti-burn switch
PE30-NF/NN, PS30-NF, PE50-NF/NN, PS50-NF, PE60-NF, PS60-NF, PE125-NF/NN, S50-SF, S125-SF, S125-SN, PS50-PF, PS125-NF/PF/NN, PS125-NE/PE, E250-SF, S250-SF, S250-SM/SN, PS250-PF/NN, PS250-NE/PE, PS400-CF/NF/GF/NN, PS400-NE/GE, PH400-CF, PH400-CE, PS630-CF/NF/GF/NN, PS630-NE/GE, PH630-CF, PH630-CE S630-CF/NF/NE/GN, H630-NE, L630-NE, S800-CF/NF/RF/PF/NN, S800-NE/RE/PE, H800-NE, L800-NE, S1000-CE/NN, S1250-NE/GE/NN, S1600-NE/NN ZAS630-CF/NF, ZAS800-CF/NF		0.016	0.016	0.0062	0.124	0.032	0.014	0.012	C2 C1 Without anti-burn switch
S100-GF, S125-GF, H100-NF, H125-NF, H225-NF/NE, H250-NF, L100-NF, L125-NF, L225-NF, L250-NF, E400-NF, H400-NE, L400-NE, ZAE400-NF, ZAS400-NF/GF		0.018	0.017	0.0068	0.124	0.032	0.014	0.012	

Note ①: The rated voltage is 100 to 110V DC.

Type of breaker	Peak exciting current, (A)					Connection diagrams and terminal numbers	
Earth Leakage Circuit Breakers	Rated voltage	AC (V)			DC (V)			
		100 (50Hz) 100-110 (60Hz)	200 (50Hz) 200-220 (60Hz)	400 (50Hz) 400-440 (60Hz)	24	100-110	For AC	For DC
ZE30-NM, ZE50-NM, ZS30-NM, ZS50-CM, ZE100-NM		0.16	0.08	0.055	1.5	0.23	C1/S1 C2/S2 Without anti-burn switch	C2/S2 C1/S1 With anti-burn switch

Type of breaker	Peak exciting current, (A) (60Hz AC)						Connection diagrams and terminal numbers
Moulded Case Circuit Breakers	Rated voltage	AC(V)		DC(V)				
		100-115	200-480	24	48	100-115	200-230	
XS2000NE, XS2000NN, XS2500NE, XS2500NN, XS3200NE, XS3200NN		1.1	0.4(200-240V AC) 0.93(380-480V AC) ③	2.52	1.55	0.67	0.35	S2 S1 (−) (+) With anti-burn switch
TL-1000NE, TL-1200NE		1.1	0.93	2.52	1.55	0.67	0.35	

Notes: ③: Exclusive use for 200V class and 400V class.
Remarks:
(1) The permissible voltage range is from 70% to 110% of the rated voltage.
Ensure that the voltage does not drop exceeding the permissible voltage range when SHT is actuated.
(2) Breaker contacts usually start opening within 30 ms after the rated voltage is applied.

(2) Circuit breaker side mounting SHT outline dimensions

Type of breaker
ZE30-NM, ZE50-NM, ZE100-NM, ZS30-NM, ZS50-CM

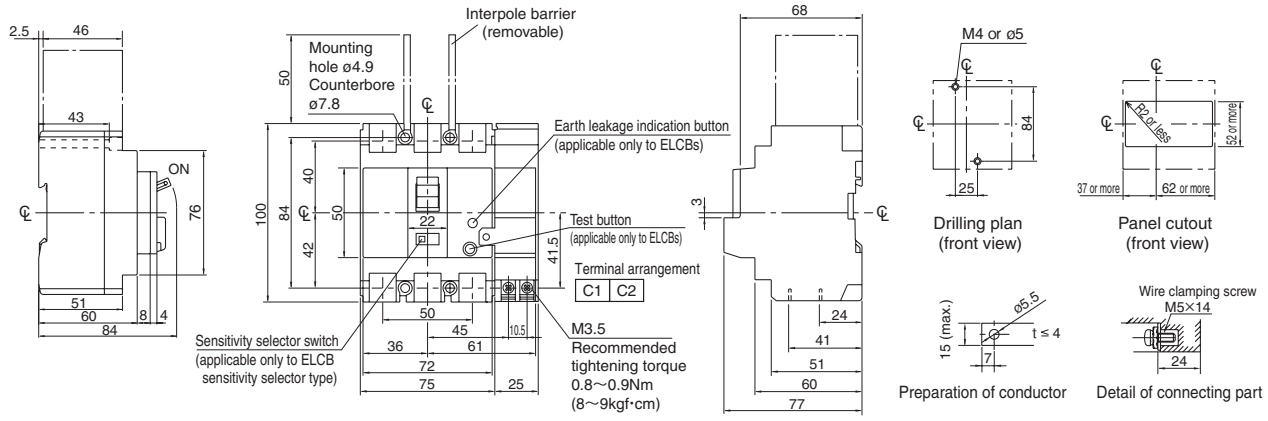

6 Accessories

6. Undervoltage trip device (UV)

(1) Instantaneous UVT (circuit breaker side mounting)

Type of breaker		Power supply capacity, (VA) ①			Exciting current, (mA) ①		
Moulded Case Circuit Breakers	Earth Leakage Circuit Breakers	Voltage (V)	AC (V)			DC (V)	
			100(50Hz) 100-110(60Hz)	200(50Hz) 200-220(60Hz)	400(50Hz) 400-440(60Hz)	24	100-110	200-240
E30-NM, S30-NM, E50-NM, S50-NM, E100-NM	**ZE30-NM, ZE50-NM, ZS30-NM, ZS50-CM, ZE100-NM**		2.8	3.4	4.4	—	28.6	—

Remarks:
(1) Tripping voltage is 70 to 35% of the rated voltage. Resettable voltage is 85% or less of the rated voltage.
(2) Operating time is below 50ms. (The time between no voltage and the main contact opening.)

Outline dimensions

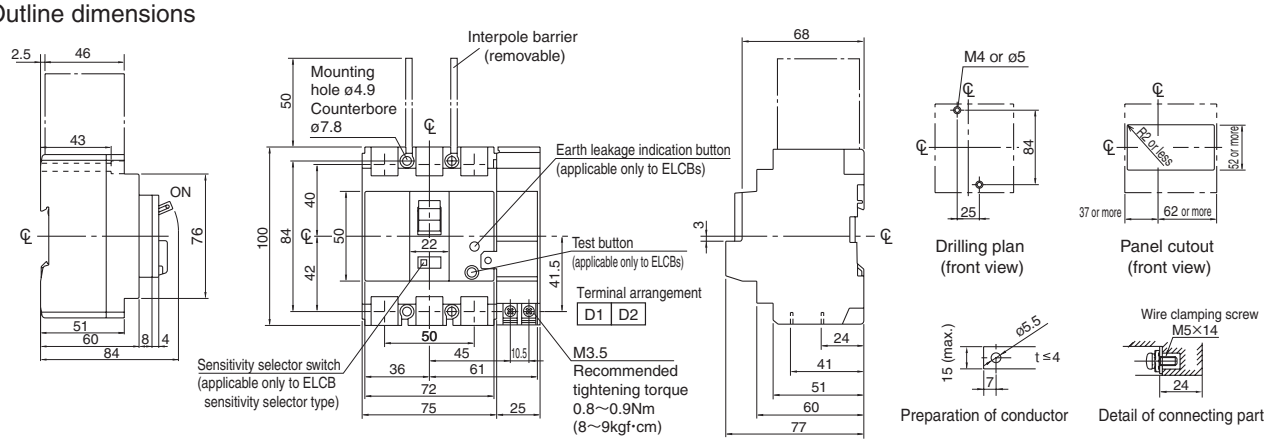

(2) Ratings of UVT with Inst

Type of breaker		Power supply capacity, (VA)				Exciting current, (mA)		
Moulded Case Circuit Breakers	Earth Leakage Circuit Breakers	Voltage (V)	AC(V)			DC(V)		
			100-120	200-240	380-450	24	100-120	200-240
PE30-NF/NN, PS30-NF, PE50-NF/NN, PS50-NF, PE60-NF, PS60-NF, PE125-NF/NN, S50-SF, S125-SF, S125-SN, PS50-PF, PS125-NF/PF/NN, PS125-NE/PE, E250-SF, S250-SF, S250-SM/SN, PS250-PF/NN, PS250-NE/PE, PS400-CF/NF/GF/NN, PS400-NE/GE, PH400-CF, PH400-CE, PS630-CF/NF/GF/NN, PS630-NE/GE, PH630-CF, PH630-CE	—		1.3	1.1	2.0	22	9	3.7
S100-GF, S125-GF, H100-NF, H125-NF, H225-NF/NE, H250-NF, L100-NF, L125-NF, L225-NF, L250-NF, E400-NF, H400-NE, L400-NE,	—		1.5	1.3	2.6	29	9.6	10

Remarks
(1) Tripping voltage is 70 to 35% of the rated voltage. Resettable voltage is 85% or less of the rated voltage.
(2) Operating time is below 50ms. (The time between no voltage and the main contact opening.)

Type of breaker		Power supply capacity, (VA)							Exciting current, (mA)		
Moulded Case Circuit Breakers	Earth Leakage Circuit Breakers	Voltage (V)	AC(V)							DC(V)	
			100-110	115-120	200-220	230-240	380-415	440-450	24	100-120	200-240
S630-CF/NF/NE/GN, H630-NE, L630-NE, S800-CF/NF/RF/PF/NN, S800-NE/RE/PE, H800-NE, L800-NE, S1000-CE/NN, S1250-NE/GE/NN, S1600-NE/NN	—		1.3	1.5	1.1	1.3	2.2	2.6	29	9.6	10

Remarks
(1) Tripping voltage is 70 to 35% of the rated voltage. Resettable voltage is 85% or less of the rated voltage.
(2) Operating time is below 50ms. (The time between no voltage and the main contact opening.)

(3) Instantaneous UVT (with UVT controller)

Type of breaker		Power supply capacity, (VA) ⑥				Exciting current, (mA) ①		
Moulded Case Circuit Breakers	Earth Leakage Circuit Breakers	Voltage (V)	AC(V)			DC(V)		
			100-120	200-240	380-450	24	100-115	200-240
XS2000NE, XS2500NE, XS3200NE TL-1000NE, TL1200NE XS2000NN, XS2500NN, XS3200NN	—		5 or more	5 or more	5 or more	22.7	6.0	—

Note: ①: No UVT controller is required. Note: ⑥: Equipped with the UVT controller.
Remarks:
(1) Tripping voltage is 70 to 35% of the rated voltage. Resettable voltage is 85% or less of the rated voltage.
(2) When the breaker is in OFF position and becomes no control voltage, the UVT may trip or maintain OFF position the breakers.
Please reset the breaker before turning the handle to ON position in either case.

A breaker equipped with the AC UVT needs a UVT controller (type XCU1S). The UVT controller is installed on the breaker by default. Separate installation of the controller is also available on request. If the breaker is of flush-mounted (FP) type, the UVT controller is separately installed by default. Also, a UVT controller (XCU1D type) in the same shape with a time delay of less than 500 ms is available on request.

● UVT controller connection diagram

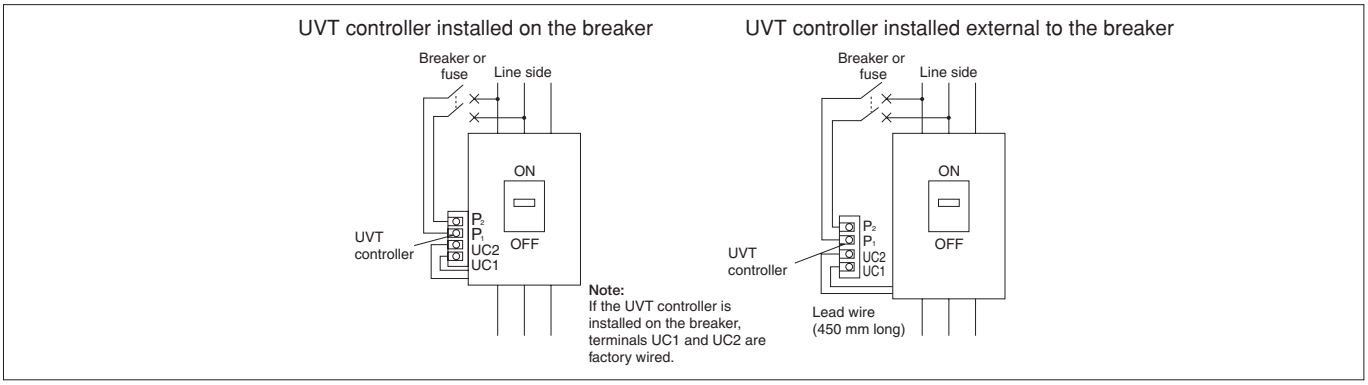

● Mounting dimensios and terminal arrangement of the UVT controller installed on the breaker

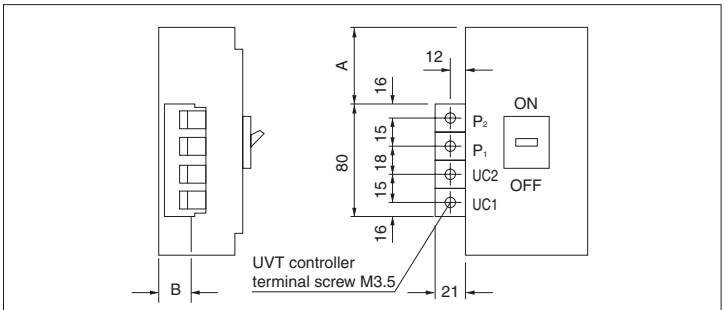

Mounting dimensions

Type of breaker	A	B
TL-1000NE, TL-1200NE	114(138)	92
XS2000NE, XS2000NN XS2500NE, XS2500NN XS3200NE, XS3200NN	180	115

Notes:
Dimension A shown in parentheses "( )" are the case fitted with OCR controller.
Remarks:
(1)Tightening torque of terminal screws M3.5: 0.88 – 1.18 Nm
(2)Applicable wire size: 2.0 mm² max

● Outline of the UVT controller installed external to the breaker (mm)

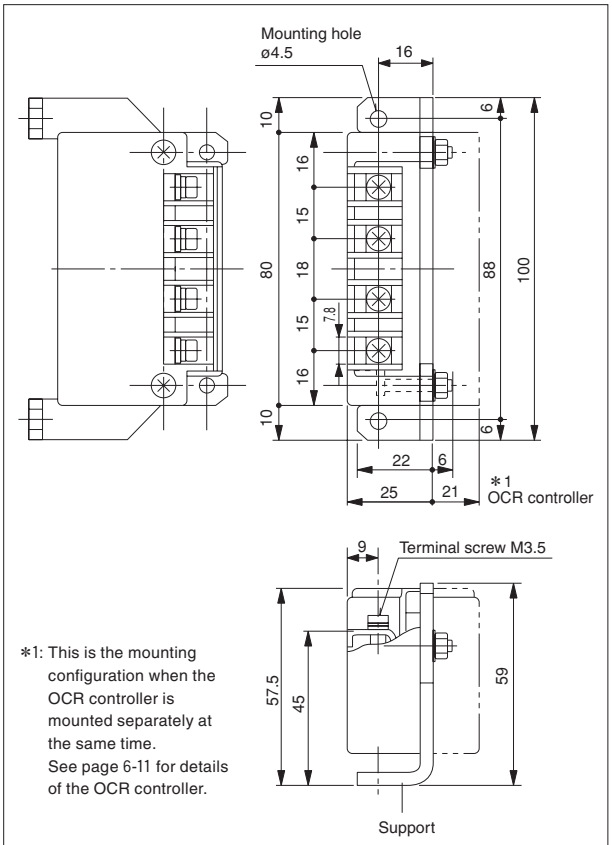

*1: This is the mounting configuration when the OCR controller is mounted separately at the same time.
See page 6-11 for details of the OCR controller.

6. Undervoltage trip device (UV)

(4) Time delay type UVT (with UVT controller)

For the time-delay type UVT, the UVT controller is mounted on the circuit breaker body.
UVT controllers are available with 500 ± 300 ms operating times.

Applicable breakers	Power supply capacity, (VA) ⑥						Exciting current, (mA) ①				
	Rated voltage	AC (V)						DC (V)				
		100-110	115-120	200-220	230-240	380-415	440-450	24	100-110	115-120	200-220	230-240
PE30-NF/NN, PS30-NF, PE50-NF/NN, PS50-NF, PE60-NF, PS60-NF, PE125-NF/NN, S50-SF, S125-SF, S125-SN, PS50-PF, PS125-NF/PF/NN, PS125-NE/PE, E250-SF, S250-SF, S250-SM/SN, PS250-PF/NN, PS250-NE/PE, PS400-CF/NF/GF/NN, PS400-NE/GE, PH400-CF, PH400-CE, PS630-CF/NF/GF/NN, PS630-NE/GE, PH630-CF, PH630-CE		1.1	1.3	0.9	1.1	1.7	2.0	22	8.1	8.9	3.4	3.7
S100-GF, S125-GF, H100-NF, H125-NF, H225-NF/NE, H250-NF, L100-NF, L125-NF, L225-NF, L250-NF, E400-NF, H400-NE, L400-NE S630-CF/NF/NE/GN, H630-NE, L630-NE, S800-CF/NF/RF/PF/NN, S800-NE/RE/PE, H800-NE, L800-NE, S1000-CE/NN, S1250-NE/GE/NN, S1600-NE/NN		1.3	1.5	1.1	1.3	2.2	2.6	29	8.8	9.6	9.2	10

Note: ①: In case the UV for DC voltege, no UVT controller is required. Note: ⑥: Equipped with the UVT controller.

● Mounting dimensios and terminal arrangement of the UVT controller installed on the breaker

Applicable breakers	A(mm)	B(mm)	C(mm)	D(mm)
PE30-NF/NN, PS30-NF, PE50-NF/NN, PS50-NF, PE60-NF, PS60-NF, PE125-NF/NN, S50-SF, S125-SF, S125-SN	34	55	24	15
PS50-PF, PS125-NF/PF/NN, PS125-NE/PE	33	55	24	15
E250-SF, S250-SF, S250-SN, S250-SM	49.5	55	24	15
PS250-PF/NN, PS250-NE/PE	50.5	55	24	15
S100-GF, S125-GF	28.5	44	25.2	16.2
H100-NF, H125-NF, H225-NF/NE, H250-NF, L100-NF, L125-NF, L225-NF, L250-NF	33.5	79	25.2	16.2
PS400-CF/NF/GF/NN, PS400-NE/GE, PH400-CF, PH400-CE, PS630-CF/NF/GF/NN, PS630-NE/GE, PH630-CF, PH630-CE	102	85	24	15
E400-NF	71	74	25.2	16.2
H400-NE, L400-NE	71	111	25.2	16.2
S630-CF/NF/NE/GN, S800-CF/NF/RF/PF/NN, S800-NE/RE/PE, S1000-CE/NN	62.5	74	25.2	16.2
H630-NE, L630-NE, H800-NE, L800-NE	62.5	111	25.2	16.2

・The UVT controller is installed in the right hand side of the breaker

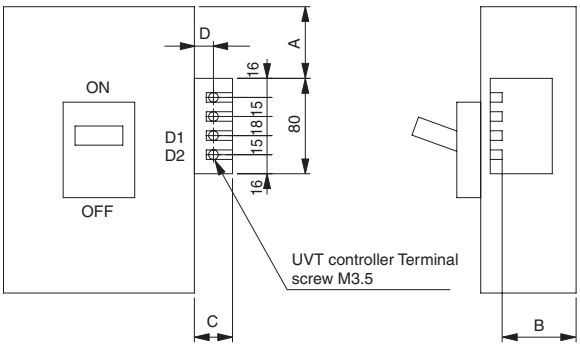

Notes: 1) Tightening torque of terminal screws M3.5: 0.9 – 1.2 Nm
2) Applicable lead wire size: 2.0 mm² max

Applicable breakers	A(mm)	B(mm)	C(mm)	D(mm)
S1250-NE/GE/NN	114	72	21	12
S1600-NE/NN	114	92	21	12

・The UVT controller is installed in the left hand side of the breaker

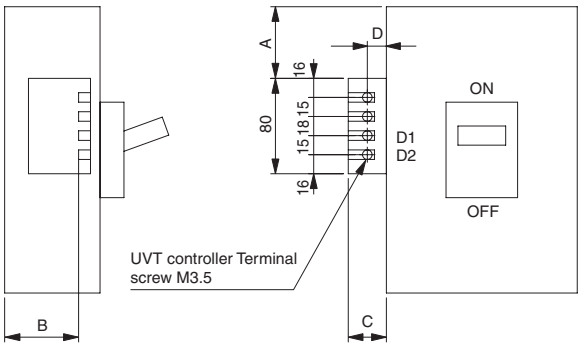

Notes: 1) Tightening torque of terminal screws M3.5: 0.9 – 1.2 Nm
2) Applicable lead wire size: 2.0 mm² max

7. Shunt Trip for Circuit Breaker with Earth Leakage Alarm (SH)

■Outer view

■SHT rating

Applicable circuit breaker with earth leakage alarm type	Peak exciting current, (A)						
	Rated voltage	AC (V)			DC (V)			
		100-120	200-240	380-450	24	48	100-120	200-240
ZAS50-GF, ZAS100-GF, ZAS125-GF, ZAS125-SF, ZAE250-SF, ZAS225-GF, ZAS250-SF, ZAS250-GF		0.016	0.016	0.0062	0.124	0.032	0.014	0.012

Remarks:
(1) The allowable voltage range is 70 to 110% of the rated voltage. Make sure that the voltage drop due to SHT operation does not fall below the allowable voltage range.
(2) The circuit breaker contacts usually begin to open within 30 ms after the rated voltage is applied.
(3) No anti-burn switch required.

■Outline dimensions

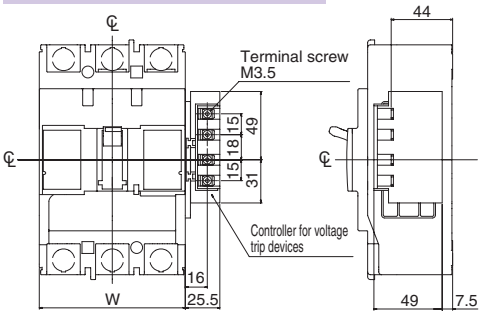

Notes: 1) Tightening torque of terminal screws M3.5: 0.9 – 1.2 Nm
2) Applicable lead wire size: 2.0 mm² max

Applicable circuit breaker with earth leakage alarm type	W(mm)	
	3P	4P
ZAS50-GF, ZAS100-GF, ZAS125-GF	90	120
ZAS225-GF, ZAS250-GF	105	140

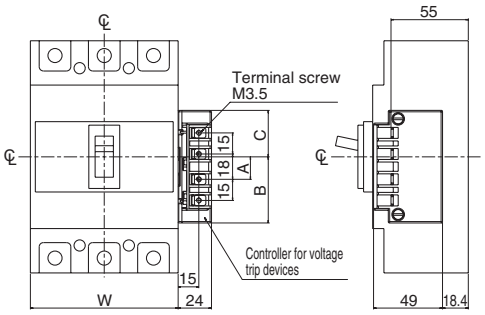

Notes: 1) Tightening torque of terminal screws M3.5: 0.9 – 1.2 Nm
2) Applicable lead wire size: 2.0 mm² max

Applicable circuit breaker with earth leakage alarm type	W(mm)	A (mm)	B (mm)	C (mm)
	3P			
ZAS125-SF	75	18	49	31
ZAE250-SF, ZAS250-SF	105	16	47	33

■Terminal code

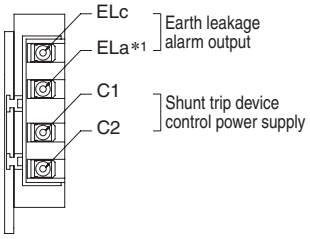

Shunt trip devices are provided with control power and earth leakage alarm output contact terminals.

*1: b contact can also be manufactured as a special product.

■Other Specifications

The controller for voltage trip devices is mounted on the right-hand side of the circuit breaker with earth leakage alarm together with the terminal block. When equipped with a shunt trip device, the control power supply and earth leakage alarm output contact of the shunt trip device are equipped with a terminal block. Auxiliary switches (AX) and alarm switches (AL) can be specified with lead wire draw-in or lead wire terminal blocks (TF) as in the past.
Flush-mounted type cannot be applied when a shunt trip device is mounted.

8. Circuit Breaker with Earth Leakage Alarm Option

(1) Earth leakage alarm automatic reset
The standard earth leakage alarm has a self-maintaining output, but is available with automatic reset as an option. It resets 0.15 seconds after the leakage is gone.

(2) Earth leakage alarm remote reset
The earth leakage alarm output can be reset remotely. Please apply this when the reset button cannot be pressed due to the installation of external accessories, etc. Do not apply an external voltage to the remote reset lead wires because the voltage shown in the table on the next page is applied to them.

(3) Test lead for circuit breaker with earth leakage alarm
If an earth leakage alarm remote reset is attached, a test lead can be applied as an option. Please apply this when the test button cannot be pressed due to the installation of external accessories, etc. Do not apply an external voltage to the test lead wires because the voltage shown in the table on the next page is applied to them.

Earth leakage alarm remote reset, test lead application table ○ : Applicable × : Not applicable

Applicable circuit breaker types	Shunt trip device (SH)	Remote reset	Remote reset + test lead
ZAS50-GF, ZAS100-GF, ZAS125-GF	Yes	×	×
	Non	○	○
ZAS125-SF	Yes	×	×
	Non	○	×
ZAE250-SF, ZAS250-SF, ZAS225-GF, ZAS250-GF	Yes	×	×
	Non	○	○
ZAE400-NF, ZAS400-NF, ZAS400-GF	Yes	○	×
	Non	○	○
ZAS630-CF, ZAS630-NF, ZAS800-CF, ZAS800-NF	Yes	○	×
	Non	○	○
NAE125-SF, NAS125-SF	Non	○	×
NAE250-SF, NAS250-SF	Non	○	×
NAE400-NF, NAS400-NF	Non	○	×

Lead wire draw-in is standard for remote reset and test lead.

Lead wire	Type	Size	Finished OD	Length	Colour
Remote reset	Heat resistant	0.5mm²	1.8mmø	450mm ①	Black
Test lead			1.8mmø	450mm ①	Grey

Lead wire terminal blocks are also applicable. See pages 6-128 to 6-130, 6-132, 6-134 for details.
Note ①: When extending lead wires, they should be 10m or less.

9. Remote reset voltage at both ends and current at closed path

Do not apply an external voltage to the remote reset lead wires because voltage is applied to them. Use a switch that can switch the voltages and currents shown in the table below without any difficulty.

Series	Type of breaker	Remote reset lead voltage at both ends	Current at closed path
Circuit Breaker with earth leakage alarm	**ZAS50-GF, ZAS100-GF, ZAS125-GF, ZAS125-SF, ZAE250-SF, ZAS250-SF, ZAS225-GF, ZAS250-GF, ZAE400-NF, ZAS400-NF, ZAS400-GF, ZAS630-CF, ZAS630-NF, ZAS800-CF, ZAS800-NF, NAE125-SF, NAS125-SF, NAE250-SF, NAS250-SF, NAE400-NF, NAS400-NF**	DC60V	5mA

10. Test lead voltage at both ends and current at closed path

Do not apply an external voltage to the test lead wires because voltage is applied to them. Use a switch that can switch the voltages and currents shown in the table below without any difficulty.

Series	Type of breaker	Test lead voltage at both ends	Current at closed path
Circuit Breaker with earth leakage alarm	**ZAS50-GF, ZAS100-GF, ZAS125-SF, ZAS125-GF, ZAE250-SF, ZAS250-SF, ZAS225-GF, ZAS250-GF, ZAE400-NF, ZAS400-NF, ZAS400-GF, ZAS630-CF, ZAS630-NF, ZAS800-CF, ZAS800-NF**	DC60V	5mA
Single phase 3-wire circuit breaker with neutral phase open protection	**NS125-SF**	120 V (half-wave rectification)	12mA
	NE250-SF, NS250-SF, NE400-NF, NS400-NF NS630-NF, NS800-NF	120V (half-wave rectification)	8mA
Earth Leakage Circuit Breakers	**ZS50-SF, ZS125-SF, ZS250-SF, ZE250-SF**	DC60V	2mA
	ZS100-GF, ZS125-GF, ZS225-GF, ZS250-GF, ZS400-GF, ZE400-NF, ZS400-NF, ZS630-CF, ZS800-CF, ZS630-NF, ZS800-NF	Sensitivity current / Test lead voltage at both ends (main circuit voltage) / Current at closed path 30mA: AC 100V 1mA; AC 220V 2mA; AC 440V 4mA 100/200/500mA: AC 100V 11mA; AC 220V 25mA; AC 440V 50mA	
Earth Leakage Circuit Breakers for motor protection	**ZE30-NM, ZS30-NM, ZE50-NM, ZS50-CM, ZE100-NM**	The main circuit voltage is applied	1A
	ZS100-SM, ZS250-SM	DC60V	2mA
Single phase 3-wire earth leakage circuit breaker with neutral phase open protection	**ZNS125-SF, ZNE250-SF, ZNS250-SF**	DC60V	2mA
	ZNE400-NF, ZNS400-NF	Sensitivity current / Test lead voltage at both ends / Current at closed path 30mA: The main circuit voltage is applied: 1mA 100/200/500mA: The main circuit voltage is applied: 14mA	
Earth Leakage Circuit Breaker for distribution boards and control boards	**TZ30EC, TZ50EE, TZ100EC**	Sensitivity current / Test lead voltage at both ends (main circuit voltage) / Current at closed path 15mA: AC 100V 33mA; AC 200V 67mA 30mA: AC 100V 67mA; AC 200V 133mA 100mA: AC 100V 83mA; AC 200V 167mA	

1. Overview

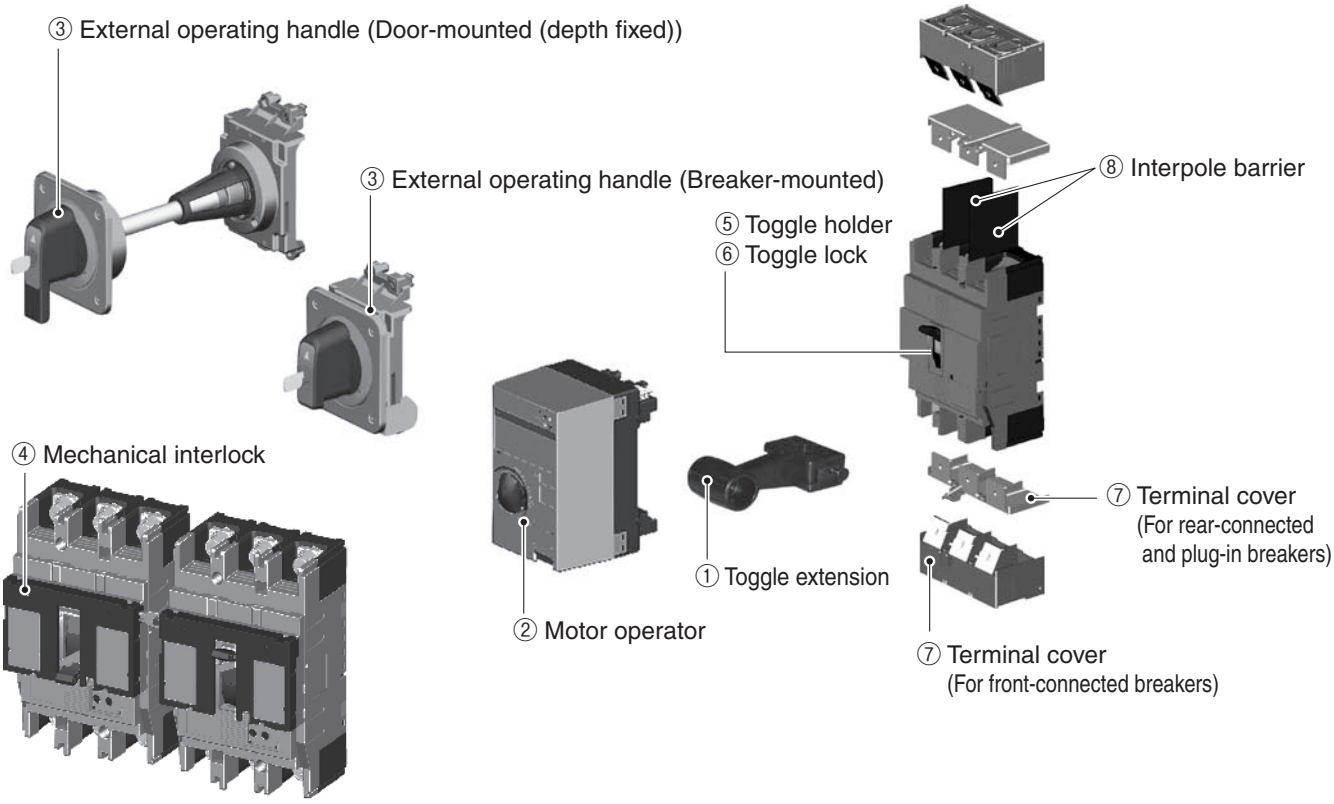

① Toggle extension — HA
Lessens the force require to close, open or reset the breaker.

② Motor operator — MC
Allows electrical operation (closing, opening and resetting) of the breaker.

③ External operating handle
Allows the breaker installed in a switchboard or box to be operated from outside.

Breaker-mounted — HB
The handle is mounted directly on the breaker.

Door-mounted (depth adjustable) — HP
The handle is coupled to the breaker through a shaft.

Door-mounted (depth fixed) — HE

④ Mechanical interlock
Provides an interlock that allows one of two breakers to be closed.
Slide type — MS
Rear-connected type — MB
Link type — ML
Wire type — MW

⑤ Toggle holder — HH
Holds the breaker ON or OFF when simply fitted onto the breaker toggle.

⑥ Toggle lock — HL
Allows the breaker to be locked ON or OFF with commercially available padlocks.

⑦ Terminal cover
Prevents live parts of the breaker from being exposed.
For front-connected breakers — CF
For rear-connected and plug-in breakers — CR
For front-connected breakers with cable clamps — CS

⑧ Interpole barrier — BA
Enhances electrical insulation between poles and prevents shortcircuit due to electrically conductive foreign matter.

⑨ Terminal block — TF
Terminates lead wires from internally mounted accessories.

⑩ Door flange — DF
Is intended to cover the cutout of a switchboard panel from the front.

⑪ DIN rail adaptor
Allows the breaker to be mounted on DIN rails.

2. Toggle extension (HA)

Reduces the force of ON, OFF, and RESET operations.

Outline dimensions

Frame size (A)	Type of breaker	Toggle extension Order code
400	**E400-NF, PS400-CF/NF/GF/NN, PS400-NE/GE, PH400-CF, PH400-CE, H400-NE, L400-NE, ZAE400-NF, ZAS400-NF/GF, NAE400-NF, NAS400-NF, NE400-NF, NS400-NF, ZE400-NF, ZS400-NF/GF, ZNE400-NF, ZNS400-NF**	T2HA40L
600, 630	**PS630-CF/NF/GF/NN, PS630-NE/GE, PH630-CF, PH630-CE**	

Note: Optional. Specify when ordering.
When used in conjunction with mechanical interlocks, care must be taken in the mounting direction.
For more details please refer to the instruction manual.

T2HA40L

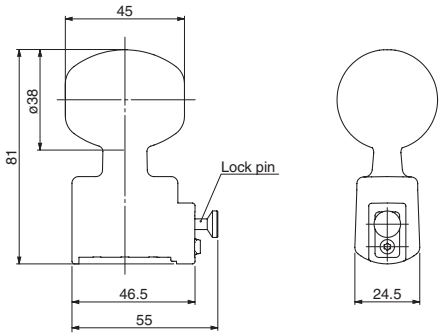

Outline dimensions XHA9B, T2HA80

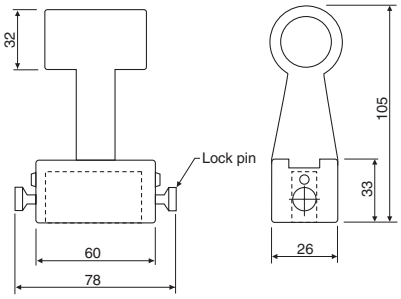

XHA10

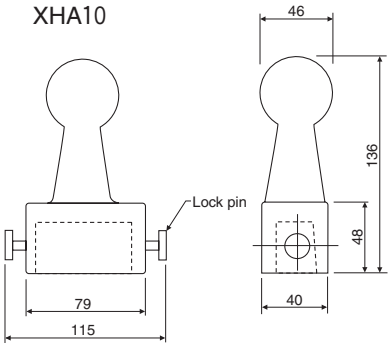

Frame size (A)	Type of breaker		Toggle extension Order code
600, 630	**S630-CF/NF/NE/GN, H630-NE, L630-NE, ZAS630-CF/NF, NS630-NF, ZS630-CF/NF**	①	T2HA80
800	**S800-CF/NF/NE/RF/RE/PF/PE/NN, H800-NE, L800-NE, ZAS800-CF, ZAS800-NF, NS800-NF, ZS800-CF/NF**		
1000	**S1000-CE/NN**		
	TL-1000NE	②	XHA9B
1200	**TL-1200NE**		
1250	**S1250-NE/GE/NN**		T2HA80
1600	**S1600-NE/NN**		
2000	**XS2000NE/NN**	③	XHA10
2500	**XS2500NE/NN**		
3200	**XS3200NE/NN**		

Note: ① Optional. Specify when ordering.
② One is supplied with every five breakers. Please specify if more are required.
③ Supplied as standard.

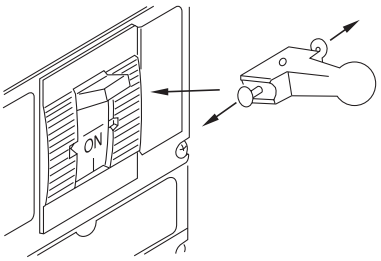

- **Mounting and Removal**
  Pull lock pins out left and right in direction of the arrows, and slot the toggle extension in place. The lock pins are spring loaded. Removal-Pull out left and right hand lock pins and hold while removing.

3. Motor operators (MC)

(1) T2MC/TPMC motor operators

Features

★Installation and removal ease

Motor driven type: Simply rotate the two fixing levers to allow the motor operator to be installed on or removed from the circuit breaker. Spring charged type: The compact and lightweight design enables easy installation and removal.

★High-speed, stable actuation

The operating time as short as up to 0.1 second makes it possible to use the motor operators for synchronized closing of breakers.

★Silent operation

The motor driven type uses a direct drive system, so it operates quietly.

★"Lock-in off" capability

This capability allows the breaker to be padlocked in the OFF state. Up to thee padlocks with a 5 to 8 mm hasp diameter can be used.Padlocks are not supplied.

★Compact and lightweight

The spring charged type is small and the OCR part of the circuit breaker is not hidden. This means that it is not necessary to be removed when changing the circuit breaker settings.

(T2MC12, T2MC25/25L, TPMC16S, TPMC25S)

Motor driven type

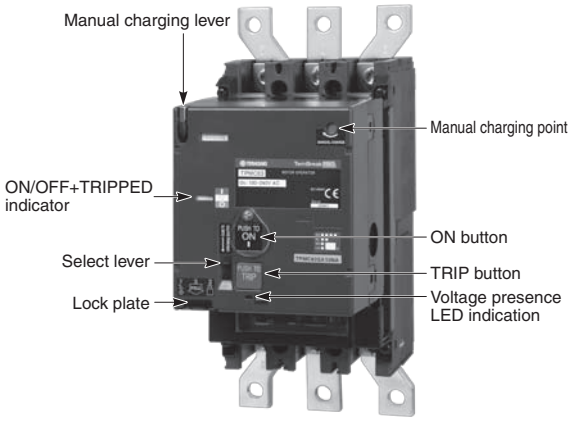

(T2MC40, TPMC63S, T2MC80)

Spring charged type

Ratings and Specifications

Motor driven type

		T2MC12	T2MC25	T2MC25L	TPMC16S	TPMC25S
Type of breaker	E			**E250-SF, ZAE250-SF, NAE250-SF, NE250-SF, ZE250-SF, ZNE250-SF**		
	S	**S100-GF, S125-GF, ZAS50-GF, ZAS100-GF, ZAS125-GF, ZS100-GF, ZS125-GF**	**ZAS225-GF, ZAS250-GF, ZS225-GF, ZS250-GF**	**S250-SF, S250-SM/SN, ZAS250-SF, NAS250-SF, NS250-SF, ZS250-SF, ZS250-SM, ZNS250-SF**	**PS50-PF, PS125-NF/PF, PS125-NN, PS125-NE/PE**	**PS250-PF, PS250-NN, PS250-NE/PE**
	H		**H100-NF, H125-NF, H225-NF/NE, H250-NF,**			
	L		**L100-NF, L125-NF, L225-NF, L250-NF**			
Rated operational voltage ①		●100-110V AC ●200-220V AC ●230-240V AC ●24V DC ●48V DC ●100-110V DC ●200-220V DC			●AC100-110V ●AC200-220V ●AC230-240V ●DC24V ●DC48V ●DC100-110V ●DC200-220V	
Steady-state current / Starting current (Peak value) (A) ②	100-110V AC	4.5/8			3.6/8.7	
	200-220V AC	4/8			3.6/6.6	
	230-240V AC	3.5/7			3.4/6	
	24V DC	18/26			14/27	
	48V DC	12/18			12/17	
	100-110V DC	2.2/6			3.4/7.6	
	200-220V DC	2.2/5.5			4.2/5.9	
Operation method		Motor driven (direct drive system)				
Operating time, (s)	ON	0.1 ③				
	OFF/RESET	0.1 ③④				
Operating switch ratings		100V 0.1A (Open voltage/current: 44V/4mA) ⑤				
Power supply required		300VA or higher				
Dielectric withstand voltage (for one minute)		1500V AC (1000V AC for 24/48V DC)				
Weight		1.4kg				
Colour of cover		Grey Blue				
Page of outline dimensions		7-244 — 7-249				

3. Motor operators (MC)

Ratings and Specifications

Spring charged type

		T2MC40	TPMC63S	T2MC80
Type of breaker	E	**E400-NF, ZAE400-NF, NAE400-NF, NE400-NF, ZE400-NF, ZNE400-NF**		
	S	**ZAS400-NF/GF, NAS400-NF, NS400-NF, ZS400-NF/GF, ZNS400-NF**	**PS400-CF/NF/GF, PS400-NE/GE/NN, PS630-CF/NF/GF, PS630-NE/GE/NN**	**S630-CF/NF/NE/GN, ZAS630-CF/NF, NS630-NF, ZS630-CF/NF, S800-CF/NF/RF/PF, S800-NE/RE/PE/NN, ZAS800-CF/NF, NS800-NF, ZS800-CF/NF, S1000-CE/NN**
	H	**H400-NE**	**PH400-CF/CE, PH630-CF/CE**	**H630-NE, H800-NE**
	L	**L400-NE**		**L630-NE, L800-NE**
Rated operational voltage ①		●100-240V AC ●24-48V DC ●100-120V DC	●100-240V AC ●24-48V DC ●100-120V DC	●100-240V AC ●24-48V DC ●100-120V DC
Steady-state current / Starting current (Peak value) (A) ②	100-110V AC	—/4.1 (ON) 1.3/3.8 (OFF,RESET)	—/4.1 (ON) 1.7/4.2 (OFF,RESET)	—/4.1 (ON) 1.7/3.5 (OFF,RESET)
	200-220V AC	—/4.0 (ON) 0.9/3.8 (OFF,RESET)	—/4.0 (ON) 1.4/3.9 (OFF,RESET)	—/4.0 (ON) 1.3/3.5 (OFF,RESET)
	230-240V AC	—/4.0 (ON) 0.9/3.8 (OFF,RESET)	—/4.0 (ON) 1.4/3.9 (OFF,RESET)	—/4.0 (ON) 1.3/3.5 (OFF,RESET)
	24V DC	—/12 (ON) 4.3/9.8 (OFF,RESET)	—/12 (ON) 6.7/15.3 (OFF,RESET)	—/12 (ON) 6.0/11.5 (OFF,RESET)
	48V DC	—/12 (ON) 4.3/9.8 (OFF,RESET)	—/12 (ON) 3.5/7.4 (OFF,RESET)	—/12 (ON) 3.2/6.5 (OFF,RESET)
	100-110V DC	—/4.1 (ON) 2.0/5.2 (OFF,RESET)	—/4.1 (ON) 1.4/4.4 (OFF,RESET)	—/4.1 (ON) 1.3/3.5 (OFF,RESET)
	200-220V DC	—	—	—
Operation method		Spring charged		
Operating time, (s)	ON	0.1 ③		
	OFF/RESET	1.5 ③④		
Operating switch ratings		100V 0.1A (Open voltage/current: 48V/1mA)		
Power supply required		300VA or higher		
Dielectric withstand voltage (for one minute)		1500V AC (1000V AC for 24/48V DC)		
Weight		3.5kg		
Colour of cover		Grey Blue		
Page of outline dimensions		7-250 — 7-257		

Notes:
① : Permissible operating range is 85 to 110%. A power transformer is available as option for 380V AC or 400-460V AC.
② : The currents shown are the maximum values at the maximum rated operational voltage.
③ : The operating time is the value when the rated operational voltage is supplied. Loss of the control power in this operating time may cause the motor operator to fail to work.
④ : The motor operator is of a short time duty. Do not subject it to more than 10 continuous ON-OFF operations. If this occurs, allow the motor operator to cool for at least 15 minutes.
⑤ : When the rated operational voltage is 24V DC the open voltage will be 22V DC.

Motorized operation

The motor operator has an input-signal self-hold circuit. To reset the tripped breaker to the OFF position, close the OFF (RESET) switch.
The voltage presence LED indication is on when the power is supplied to the motor operator.

■Auto reset feature (optional)

The auto reset feature allows the breaker to be automatically reset approx. 1.5 seconds after the breaker trips open. This option contains auto-reset switches and does not require to use auxiliary or alarm switches installed in the breaker.
Note 1: that after the thermal OCR trips a thermal-magnetic breaker, the breaker cannot be immediately closed though it can be auto-reset. Wait for a few minutes after the tripping and provide a close signal to the breaker.
Note 2: Do not use an alarm switch to reset breakers. This option resets the tripped breaker automatically, regardless of the cause of the tripping.

Manual operation

Motor driven type: Pull the manual operating handle out to turn it ON and OFF. Rotating the handle anticlockwise turns ON the breaker and clockwise turns OFF or resets the breaker.
Spring charged type: Switch to manual operation from motorized operation using the select lever. Use the manual spring charging handle to charge the spring and press the ON or TRIP button to perform manual operation.
Spring charged type: When the TRIP button is pressed while the control power is supplied, the circuit breaker turns OFF automatically, and if equipped with an alarm switch, it provides an output signal because the MCCB trips once. Press the TRIP button all the way in. Pressing the TRIP button halfway causes the breaker to go off without tripping, resulting in no alarm signal delivered even if the breaker is equipped with an alarm switch.

Breakers position in tripped state

Breakers position when the breaker has tripped differs depending on the motor operator being of standard type or being equipped with the auto reset feature (optional), as shown in the table below:

Motor driven type

Cause of trip	Breakers position in tripped state	
	Standard type	With auto reset feature
Manually tripped	TRIP	○ (OFF) ∗
SHT/UVT		
Overcurrent		

∗ : The motor operator automatically provides OFF (reset) operation to the breaker.

Spring charged type

Cause of trip	Breakers position in tripped state	
	Standard type	With auto reset feature
Manually tripped	○ (OFF) ∗	○ (OFF) ∗
SHT/UVT	TRIP	
Overcurrent		

∗ : The motor operator automatically provides OFF (reset) operation to the breaker.

Table 1 Electrical interlock cables

Interlock cables Order codes	Length	Remarks
T2MM25L05	500mm	An electrical interlock is adopted between T2MC12, T2MC25/25L, TPMC16S, and TPMC25S types.
T2MM25L15	1500mm	
T2MM40L06	600mm	An electrical interlock is adopted between T2MC40, T2MC80, and TPMC63S types.
T2MM40L21	2100mm	
T2MM40S06	600mm	An electrical interlock is adopted between T2MC40 (or TPMC63S, T2MC80) and T2MC12 types (or T2MC25, TPMC16S, TPMC25S types).
T2MM40S21	2100mm	

Operation precautions

1. Ensure that the actual operation voltage ranges from 85% to 110% of the rated one.
2. Use operation switches whose ratings and power capacity is as specified in the “Ratings and Specifications” table on the previous page.
3. Ensure an operating time of 50 msec or more when operating switches to turn on/off the breaker. A shorter operating time may result in failure in operating the breaker. In such a case, repeat the operation.
4. Do not continuously apply ON/OFF operating signals. ON/OFF signals must be separated by 0.3 sec or more. With spring charged type, OFF and RESET operations must be 1.5 sec or more apart.
5. With motor driven type, do not connect alarm switches (AL) to the control circuit (OFF, ON or COM terminals). Doing so may cause the motor operator to fail to work.
6. If the motor operator is used in conjunction with a shunt trip device (SH), ensure that voltage supply to the SHT is shut off after the reset operation ends.
7. To operate multiple motor operators in batch, do not directly connect their control terminals in series, but through a separate relay for each. Otherwise, sneak circuits may form and cause the motor operators to fail to work.
8. Use noise filters if the control power supply of the motor operator is shared by peripheral devices. Otherwise, power supply noise may cause malfunction of the peripheral devices.
9. When the motors are used in conjunction with the mechanical interlock the electrical interlock should be provided between the motors in order to avoid the simultaneous closing. The followings are the available electrical interlock cables.

Control circuit diagrams of motor operators

Motor driven type

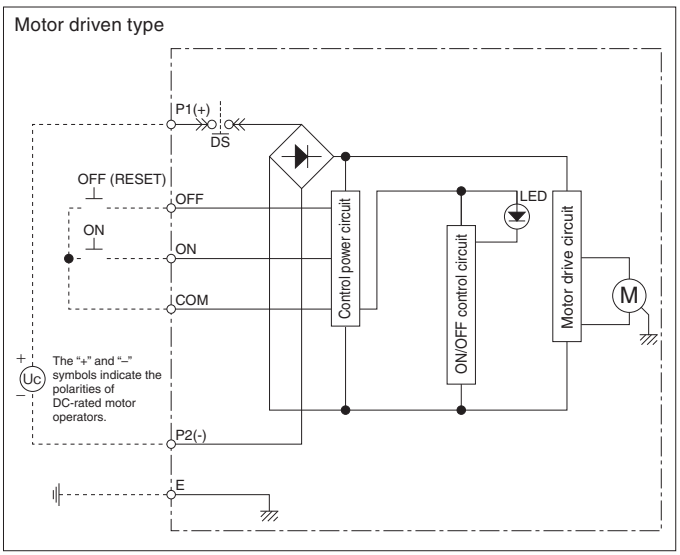

Spring charged type

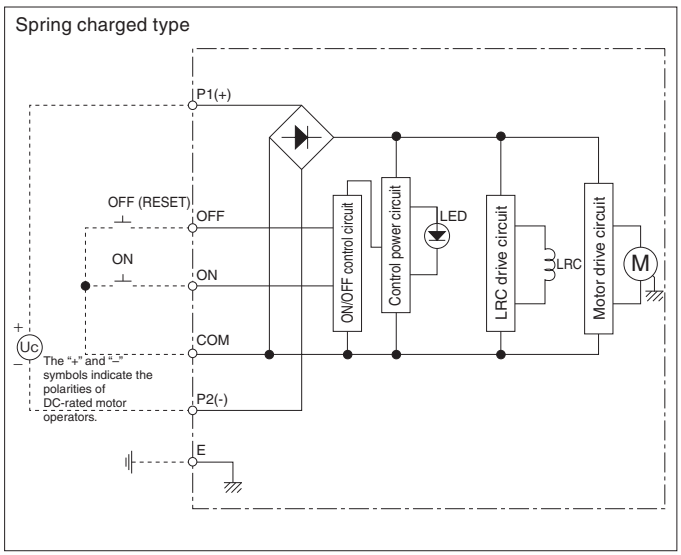

3. Motor operators (MC)

(3) T2MC/XMD motor operators

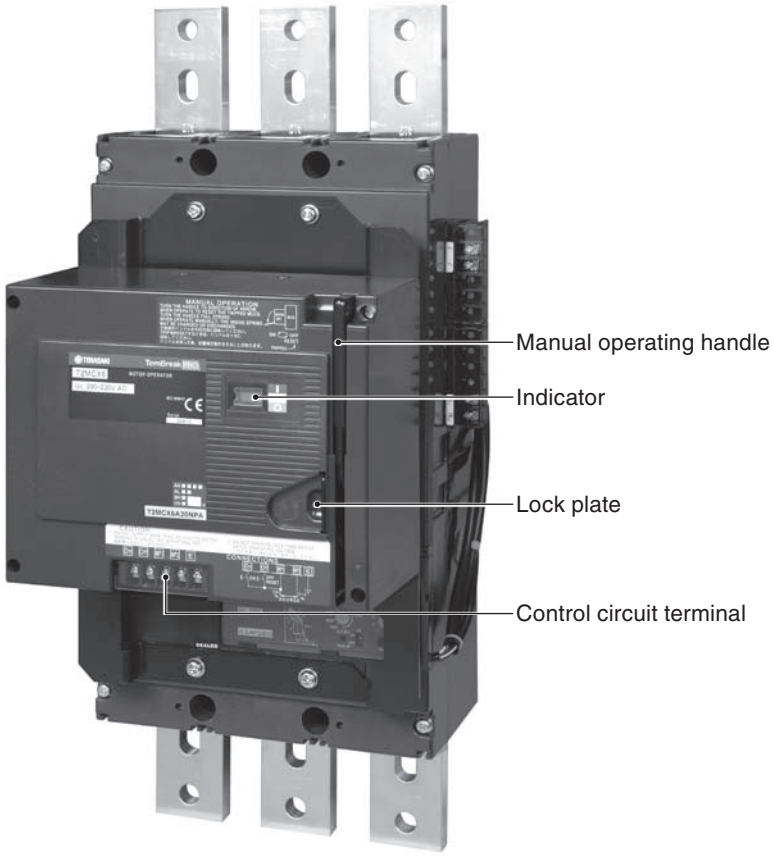

(T2MCX6)
Spring charged type

Ratings and Specifications

			T2MCX6	XMD9
Applicable breakers			**S1250-NE/GE/NN, S1600-NE/NN**	**TL-1000NE, TL-1200NE**
Rated operational voltage ①			● AC100-115V ● AC200-230V ● DC100-110V ● DC24V	
Steady-state current / Starting current (Peak value) (A) ②	100-115V AC	ON	—/3.1	
		OFF, RESET	1.8/6.0	
	200-230V AC	ON	—/1.2	
		OFF, RESET	1.0/3.2	
	100-110V DC	ON	—/0.8	
		OFF, RESET	1.1/4.2	
	24V DC	ON	—/4.5	
		OFF, RESET	4.0/12.0	
Operation method			Spring charged	
Operating time, (s)	ON (Max)		0.06 ③	
	OFF/RESET		3 ③	
Power supply required			300VA	
Dielectric withstand voltage (for one minute)			AC1500V ④	
Weight			6.4kg	
Colour of cover			Grey Blue	Black
Page of outline dimensions			7-258 – 7-260	

Notes:
① : Permissible operating range is 85 to 110%. A power transformer is available as option for 380V AC or 400-460V AC.
② : The currents shown are the maximum values at the maximum rated operational voltage.
③ : The operating time is the value when the rated operational voltage is supplied. Loss of the control power in this operating time may cause the motor operator to fail to work.
④ : Dielectric withstand voltage for 24V DC motor is 500V AC .

Features

★ Clear status indication
Colour indication: Red means ON, green OFF and white TRIPPED.

★ Quick closing
Energy in a charged spring closes the breaker 60 msec or less.
High-speed, time-stable operation is ensured after multiple times of closing cycles.

★ Equipped with anti-pumping circuit
When the closing signal is applied, TRIP–RESET–ON cycles are not repeated even though the cause of tripping is in the breaker.

★ Ease of manual ON-OFF operation
It turns ON and OFF with one stroke using manual operating handle.

★ "Lock-in off" capability
This capability allows the breaker to be padlocked in the OFF state.
Padlocks are not supplied.

Operation mechanism

Motorized operation

■ Breaker ON

Closing the ON switch activates the latch release coil (LRC), thereby releasing the closing spring to turn the breaker ON.

■ Breaker OFF (RESET)

Closing the OFF/RESET switch activates the (Y) control relay, thereby starting the motor to turn the breaker OFF. At the same time, the closing spring is charged. The motor is deenergized when the breaker turns OFF (RESET).

■ Breaker auto-reset (optional)

The auto-reset option uses an auto-reset switch (alarm switch) through which the closing spring is charged and the breaker is reset automatically after the breaker trips open. This option both for XMD and T2MC will be factory wired.

Notes: 1. For S1250 and S1600, installable alarm switch will be only 1 piece.
2. When the breaker is equipped with the auto-reset option, a signal self-hold circuit is required because the signal provided by the alarm switch is a pulse.
3. Not applicable to thermal-magnetic breakers

Manual operation ＊

■ Breaker ON . OFF (RESET)

Pulling down the manual operating handle turns the breaker ON and OFF/REST alternately.
The handle returns to the original position when released.
＊ With auto-charge/discharge feature:
When manual ON operation is performed while the control power is applied, the handle switch (HS) operates to discharge the closing spring.
OFF operation causes the closing spring to be charged.
When manual ON or OFF operation is performed while the control power is lost, and afterwards the control power is recovered, the closing spring is discharged or charged in the same manner as described above.
When the auto-charge/discharge action is in progress, mechanical noises will be heard. The noises however do not mean a failure.

Control circuit diagram

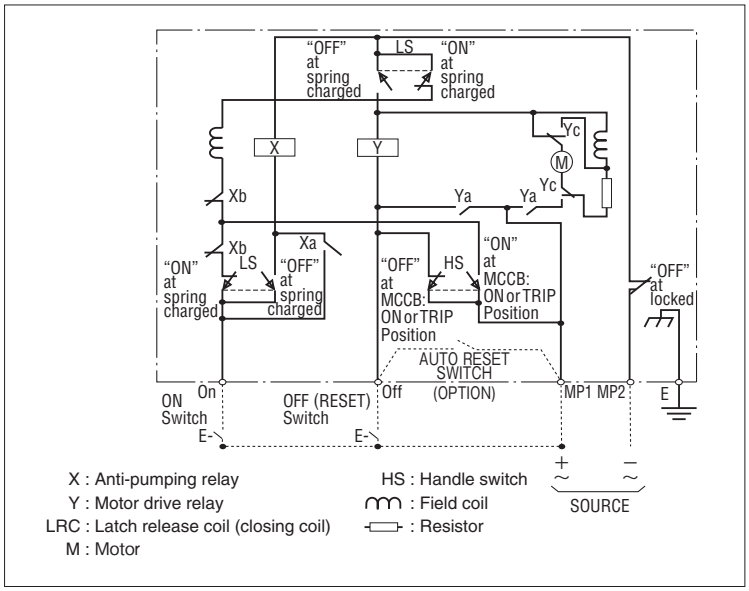

Operation Precautions

- Ensure that the actual operation voltage ranges from 85% to 110% of the rated one.
- The motor operator is short-time rated. The number of continuous switching (ON-OFF) cycles must not exceed 10. After any 10 continuous switching cycles, provide a pause of at least 15 minutes to the motor operator for cooling.
- When conducting the dielectric withstand voltage test, apply voltage between the control terminal group and ground. Ensure that the test voltage does not exceed 1500V AC (500V AC if the rated operation voltage is 24V DC).
- f the breaker is equipped with the UVT device, ensure that the UVT device is reset before providing a closing signal to the breaker.
- It takes up to three seconds to complete motorized OFF operation. If the breaker requires to be immediately opened from a remote location in an emergency, add the SHT or UVT device to the breaker for remote electrical tripping.
- Make sure that the current and switching capacities of the operation switch are appropriate for the application.
- Avoid repeated and continuous applications of the operation power supply to the motor operator.
- Use noise filters if the control power supply of the motor operator is shared by peripheral devices. Otherwise, power supply noise may cause malfunction of the peripheral devices.
- Be sure to apply power to control power terminal MP1. If the breaker is turned ON or OFF manually without power applied to MP1, the auto charge/discharge feature is disabled, and thus the motor operator will not be activated next time. In such a case, applying the rated operation voltage between control power terminals MP1 and MP2 will enable the auto charge/discharge feature.
- The control power lost at the breaker charge process, and afterwards the control power is recovered, the closing spring is no more charged. Unusually the breaker reopen a charge depending on the handle position of the breaker.

4. External operating handles

(1) Breaker-mounted (field installable small type) (HB)

The external operating handle is a tool that allows the breaker installed in a switchboard to be operated from outside and complies with IEC 60204-1. The breaker-mounted type external operating handle is designed to be mounted directly to the breaker body.

■ Outer view

Types
T2HB16L
TPHB16S
T2HB25L
TPHB25S

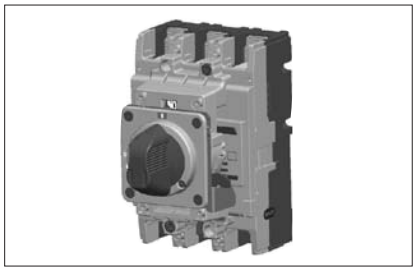

■ Mounting instructions

The external operating handle has not been mounted on the breakers.
For details on how to mount the handle, see the Operating Instructions packaged with the product.

[1] Mounting of external operating handle assembly

Install the circuit breakers and handles as follows.

- Make sure that the breaker is in the OFF position.
- Put the external operating handle assembly onto the breaker in place so that the breaker toggle is engaged with the slide lever of the assembly. Rotate two knobs to secure the handle assembly.

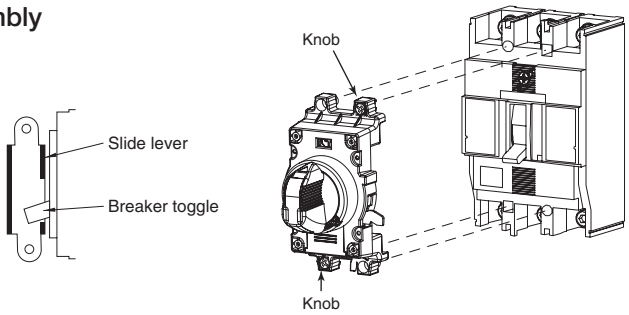

[2] Installation of handle escutcheon and latch plate

- Drill holes in the panel according to the panel cutout dimensions. Sandwich the panel between the handle escutcheon and latch plate and temporarily tighten using the supplied screws.
- Close the panel. Make adjustment so that the gap between the handle assembly and handle escutcheon is even and the assembly is not inclined against the breaker.

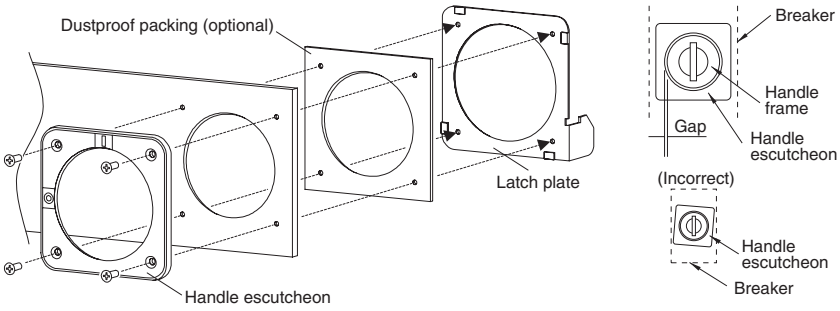

■ Breaker mounting direction

The ON (I) and OFF (O) indication of the external operating handle can be re-oriented in steps of 90 degrees with respect to the operating mechanism.
This allows the indication position to remain the same whether the breaker is mounted vertically (right side up or upside down) or horizontally (on its left side or on its right side).
The upper power supply type is standard. If a non-standard type is required, state the type when ordering.

R: Right power supply type	U: Upper power supply type (standard)	L: Left power supply type
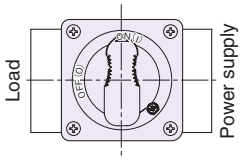	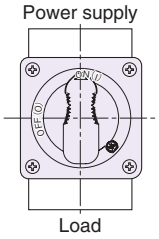	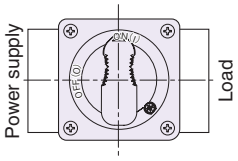

- For a change in mounting direction, see the Operating Instructions packaged with the product.

■Panel lock mechanism

The external operating handle keeps the panel door locked when in the 'ON' position. There are two types, RESET Open and OFF Open.

(1) **RESET Open (Standard type)**
The handle is turned to the RESET OPEN position to open the panel door.

(2) **OFF Open**
The handle is turned to the OFF position to open the panel door.

- **Panel lock release knob (Standard)**
The release knob enables the panel door to be opened with the handle in the 'ON' position. To release: turn the release knob in the direction of anti-clockwise with a flat-bladed screwdriver.
- **Safety interlock (Standard)**
The safety interlock prevents the breaker from turning ON as long as the panel is open. This interlock can be released using the hook lever.

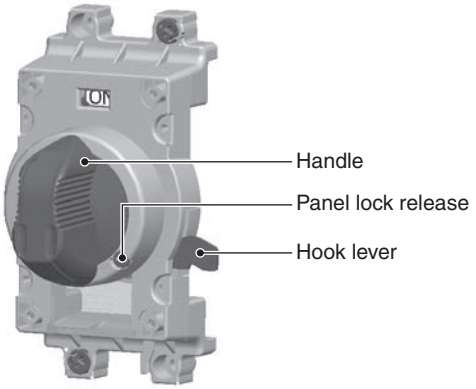

■Toggle lock mechanism

- **Padlock (Standard)**
This mechanism allows the breaker to be padlocked in the ON or OFF position.
Padlocks are not supplied.
Up to three padlocks can be installed.

Padlock dimensions (mm)

Type of handle	A	Dia.
T2HB	13 min	ø5.5-8

＊: Padlocking in OFF position only required by IEC 60204-1 is also available.
Please specify when ordering.

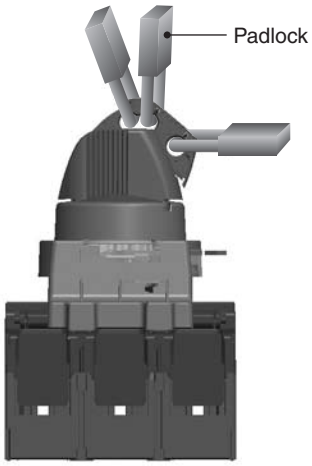

■Protection degree (IEC 60529)

Optional dust-proof gaskets may be used to protect against dust.

IP30	Standard specification
IP50	Optional, with a dust proof packing
IP55	Special specification ①

Notes ①: For the depth of switchboard, take account of thickness of the packing.
See the Operating Instructions packaged with the product.

■To be stated when ordering

Order code T2HB16L U R 3 B T P

Type of external operating handle	Breaker mounting direction	Panel lock	Protection degree	Colour	Padlock	Series
T2HB16L T2HB25L	U: Upper power supply type ＊ R: Right power supply type L: Left power supply type	R: RESET open ＊ F: OFF open	3: IP30 ＊ 5: IP50 S: IP55 (special spec.)	B: Black handle (Grey Blue base) ＊ R: Red handle (Yellow base)	T: Lock in ON or OFF ＊ N: Lock in OFF	P: PRO Series ①
TPHB16S TPHB25S						—

＊: Standard specification
Note ①: For T2HB, specify "P". Do not specify anything in the case of TPHB (blank).

4. External operating handles

T2HB16L

Applicable breaker types	Number of poles
S50-SF, S125-SF, S125-SN, ZAS125-SF, NAE125-SF, NAS125-SF, NS125-SF, ZS50-SF, ZS125-SF, ZS100-SM, ZNS125-SF,	3
	4
PE30-NF/NN, PS30-NF, PE50-NF/NN/NFZ/NFN, PS50-NF/NFZ, PE60-NF, PS60-NF, PE125-NF/NN/NFZ/NFN, PZE30-NF, PZS30-NF, PZE50-NF/NFN, PZS50-NF, PZE60-NF, PZS60-NF, PZE125-NF/NFN	3

HL : Handle Frame Centre Line
℄ : Handle Centre Line

• Outline dimensions

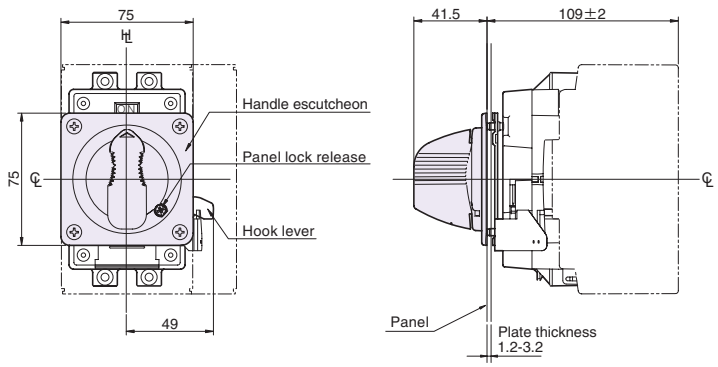

• Panel cutout dimensions

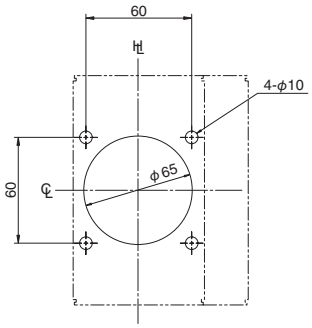

• Positions of the hinge and handle as seen from the load side of the breaker. Ensure that the hinge is positioned in the area.

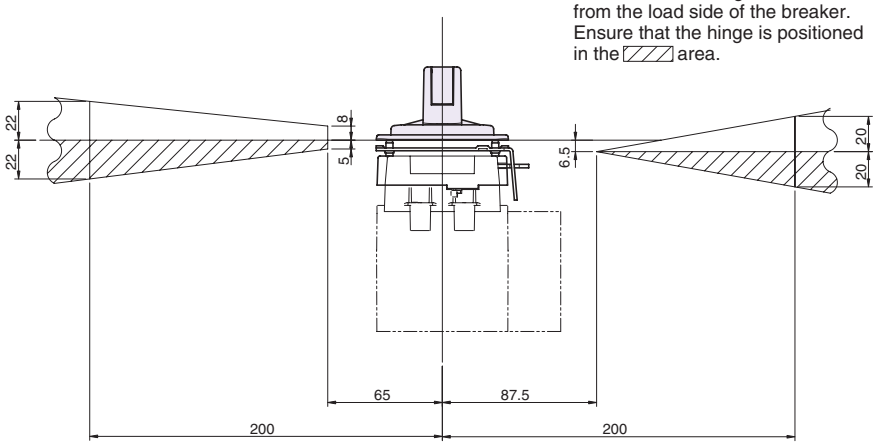

TPHB16S

Applicable breaker types
PS50-PF, PS125-NF/PF/NN, PS125-NE/PE

HL : Handle Frame Centre Line
℄ : Handle Centre Line

• Outline dimensions

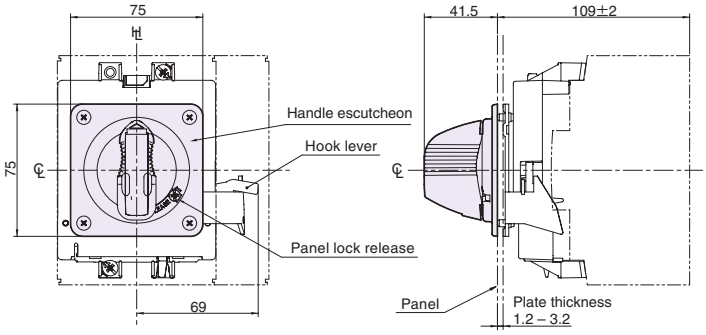

• Panel cutout dimensions

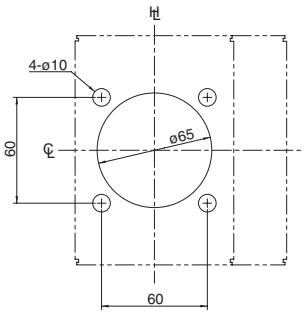

• Positions of the hinge and handle as seen from the load side of the breaker. Ensure that the hinge is positioned in the area.

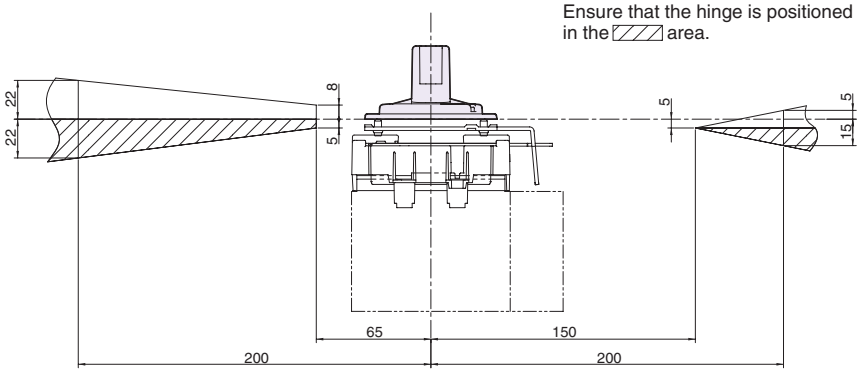

4. External operating handles

T2HB25L

Applicable breaker types
E250-SF, S250-SF, S250-SM, S250-SN ZAE250-SF, ZAS250-SF, NAE250-SF, NAS250-SF, NE250-SF, NS250-SF ZE250-SF, ZS250-SF, ZS250-SM, ZNE250-SF, ZNS250-SF

HL : Handle Frame Centre Line
℄ : Handle Centre Line

• Outline dimensions

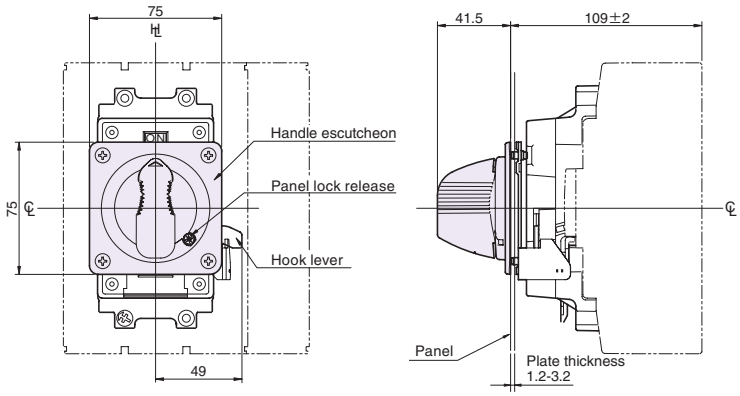

• Panel cutout dimensions

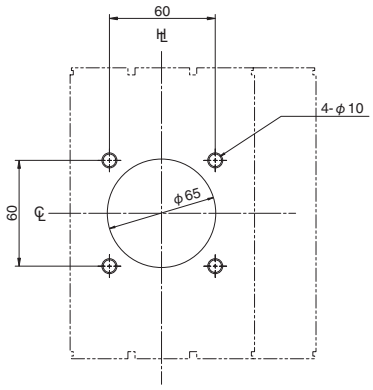

• Positions of the hinge and handle as seen from the load side of the breaker. Ensure that the hinge is positioned in the area.

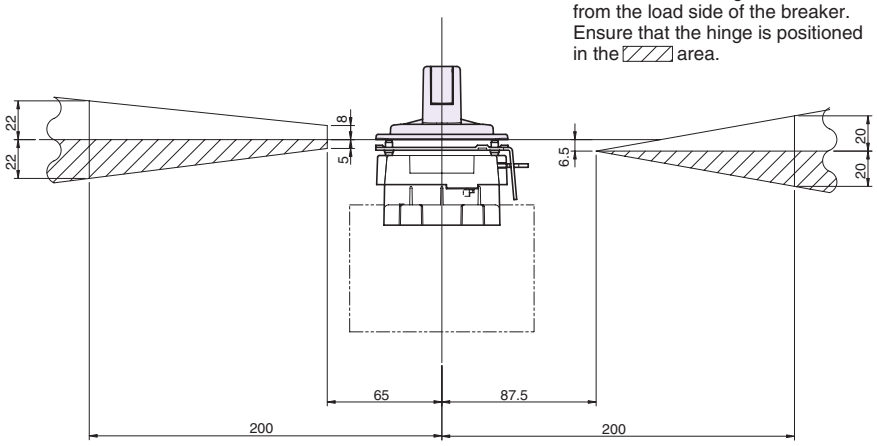

TPHB25S

Applicable breaker types
PS250-PF/NN, PS250-NE/PE

HL : Handle Frame Centre Line
℄ : Handle Centre Line

• Outline dimensions

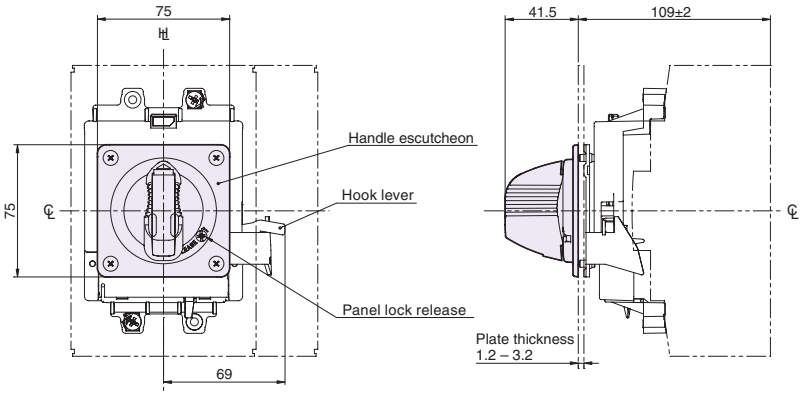

• Panel cutout dimensions

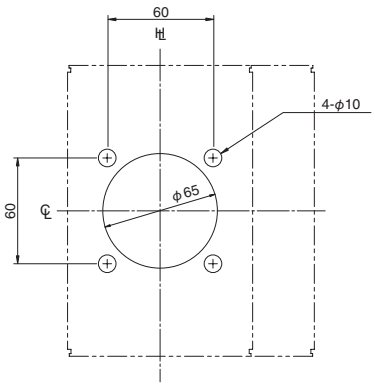

• Positions of the hinge and handle as see from the load side of the breaker. Ensure that the hinge is positioned in the area.

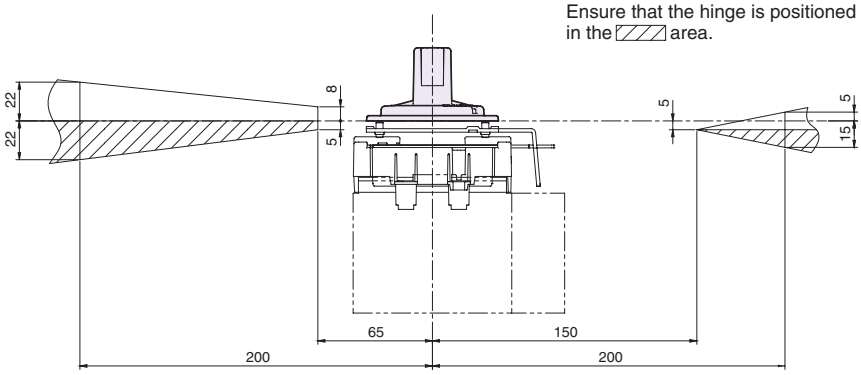

6 Accessories

4. External operating handles

(2) Breaker-mounted (field installable standard type) (HB)

The external operating handle is a tool that allows the breaker installed in a switchboard to be operated from outside and complies with IEC 60204-1. The breaker-mounted type external operating handle is designed to be mounted directly to the breaker body.

■ Outer view

Types
T2HB12
T2HB25
T2HB40
TPHB63S
T2HB80

■ Mounting instructions

The external operating handle has not been mounted on the breakers.
For details on how to mount the handle, see the Operating Instructions packaged with the product.

[1] Mounting of external operating handle assembly

Install the circuit breakers and handles as follows.

- Make sure that the breaker is in the OFF position.
- Put the external operating handle assembly onto the breaker in place so that the breaker toggle is engaged with the slide lever of the assembly. Rotate two knobs to secure the handle assembly.
- For T2HB40, T2HB63S and T2HB80, tighten the bolts to secure the handle assembly.

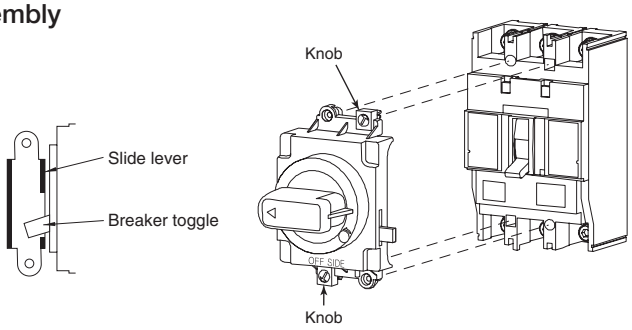

[2] Installation of handle escutcheon and latch plate

- Drill holes in the panel according to the panel cutout dimensions. Sandwich the panel between the handle escutcheon and latch plate and temporarily tighten using the supplied screws.
- Close the panel. Make adjustment so that the gap between the handle assembly and handle escutcheon is even and the assembly is not inclined against the breaker.

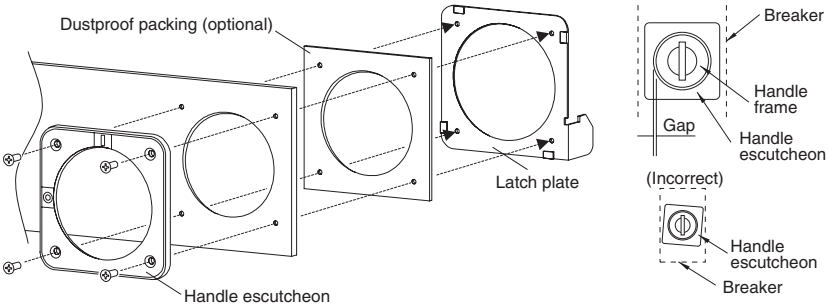

■ Breaker mounting direction

The ON (I) and OFF (○) indication of the external operating handle can be re-oriented in steps of 90 degrees with respect to the operating mechanism.
This allows the indication position to remain the same whether the breaker is mounted vertically (right side up or upside down) or horizontally (on its left side or on its right side).
The upper power supply type is standard. If a non-standard type is required, state the type when ordering.

R: Right power supply type	U: Upper power supply type (standard)	L: Left power supply type
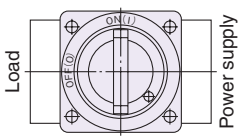	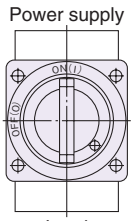	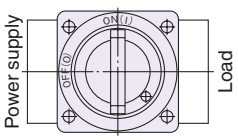

- For a change in mounting direction, see the Operating Instructions packaged with the product.

■ Panel lock mechanism

The external operating handle keeps the panel door locked when in the 'ON' position. There are two types, RESET Open and OFF Open.

(1) **RESET Open (Standard type)**
The handle is turned to the RESET OPEN position to open the panel door.

(2) **OFF Open**
The handle is turned to the OFF position to open the panel door.

- **Panel lock release knob (Standard)**
The release knob enables the panel door to be opened with the handle in the 'ON' position. To release: turn the release knob in the direction of anti-clockwise with a flat-bladed screwdriver.
- **Safety interlock (Standard)**
The safety interlock prevents the breaker from turning ON as long as the panel is open. This interlock can be released using the hook lever.

■ Toggle lock mechanism

- **Padlock (Standard)**
This mechanism allows the breaker to be padlocked in the ON or OFF position. ∗
Padlocks are not supplied.
Up to three padlocks can be installed.

Padlock dimensions (mm)

Type of handle	A	Dia.
T2HB, TPHB	13 min	ø5.5-8

- **Key lock (Optional)**
Key locking is possible in the ON or OFF position.

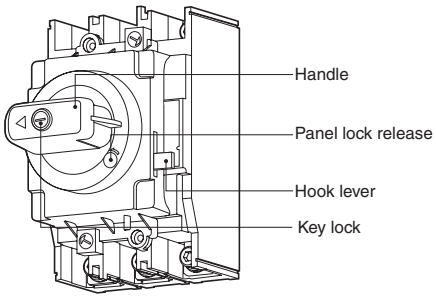

∗ : Padlocking in OFF position only required by IEC 60204-1 is also available.
Please specify when ordering.

■ Protection degree (IEC 60529)

Optional dust-proof gaskets may be used to protect against dust.

IP30	Standard specification
IP50	Optional, with a dust proof packing
IP55	Special specification ①

Notes ① : For the depth of switchboard, take account of thickness of the packing.
See the Operating Instructions packaged with the product.

■ To be stated when ordering

Order code T2HB12 U R 3 B T P

Type of external operating handle	Breaker mounting direction	Panel lock	Protection degree	Colour	Key lock / Padlock	Series
T2HB12 T2HB25 T2HB40 T2HB80	U : Upper power supply type (standard) ∗ R : Right power supply type L : Left power supply type	R : RESET open ∗ F : OFF open	3 : IP30 ∗ 5 : IP50 S : IP55 (special spec.)	B : Black handle (Grey Blue base) ∗ R : Red handle (Yellow base)	T : with padlock (Lock in ON or OFF) ∗ W : with key lock and padlock (Lock in ON or OFF) N : with padlock (lock in OFF) K : with key lock and padlock (lock in OFF)	P : PRO Series ①
TPHB63S						—

∗:Standard specification
Note ①: For T2HB, specify "P". Do not specify anything in the case of TPHB (blank).

■ Outline dimensions

HL : Handle Frame Centre Line
℄ : Handle Centre Line

T2HB12

Applicable breaker types
S100-GF, S125-GF, ZAS50-GF, ZAS100-GF, ZAS125-GF, ZS100-GF, ZS125-GF

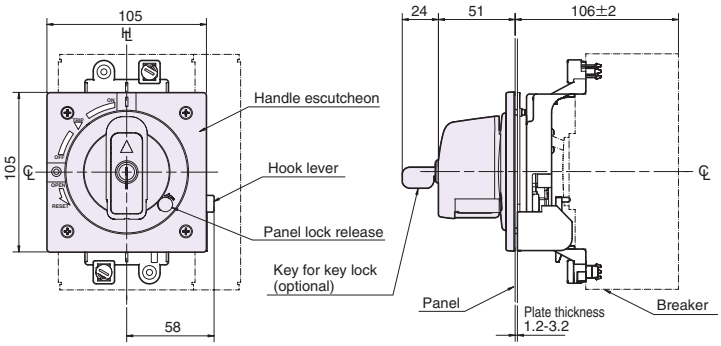

● Panel cutout dimensions

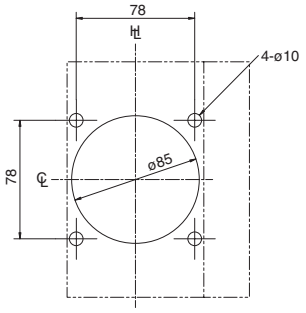

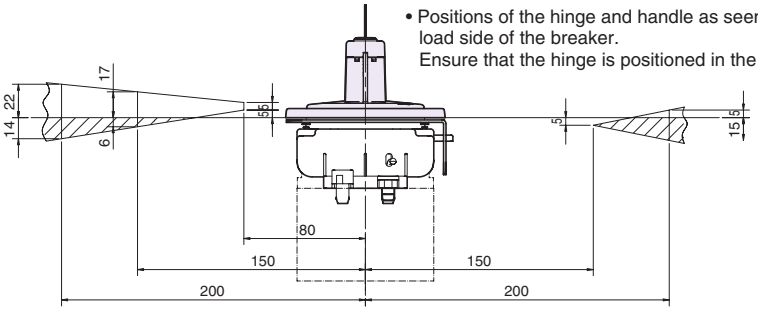

• Positions of the hinge and handle as seen from the load side of the breaker.
Ensure that the hinge is positioned in the area.

T2HB25

Applicable breaker types	A (mm)
ZAS225-GF, ZAS250-GF, ZS225-GF, ZS250-GF	106±2
H100-NF, H125-NF, H225-NF/NE, H250-NF, L100-NF, L125-NF, L225-NF, L250-NF	141±2

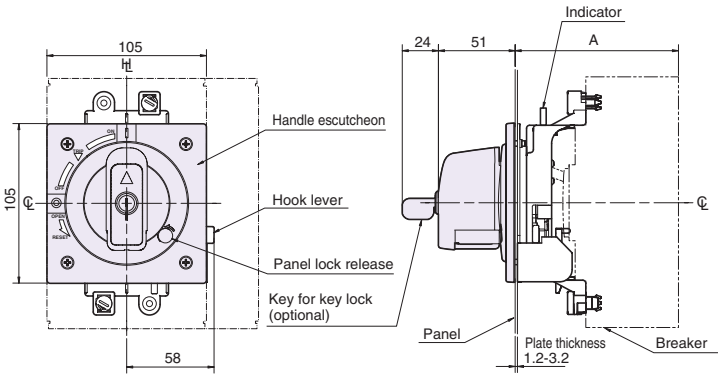

● Panel cutout dimensions

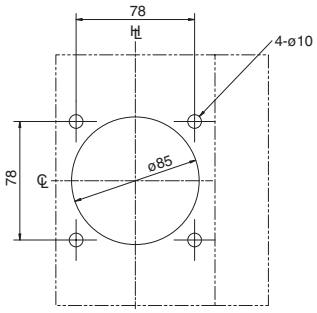

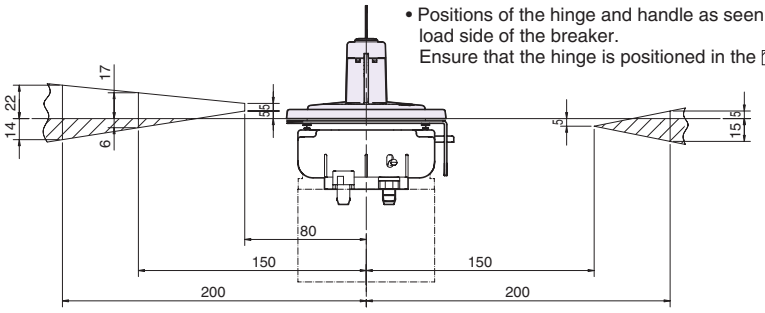

• Positions of the hinge and handle as seen from the load side of the breaker.
Ensure that the hinge is positioned in the area.

■Outline dimensions

HL : Handle Frame Centre Line
℄ : Handle Centre Line

T2HB40

Applicable breaker types	A (mm)	B (mm)
E400-NF, ZAE400-NF, ZAS400-NF/GF, NE400-NF, NS400-NF, NAE400-NF, NAS400-NF, ZE400-NF, ZS400-NF/GF, ZNE400-NF, ZNS400-NF	150±2	97
H400-NE, L400-NE	187±2	134

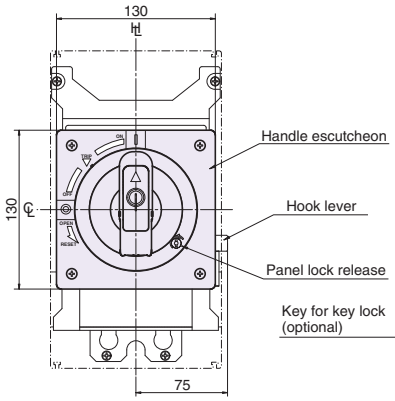

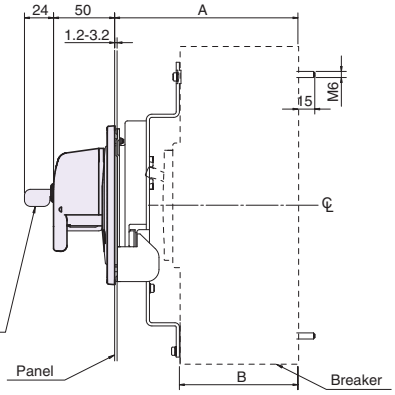

● Panel cutout dimensions

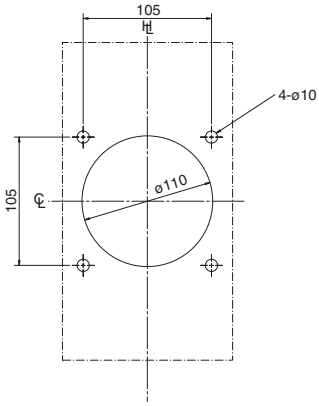

• Positions of the hinge and handle as seen from the load side of the breaker.
Ensure that the hinge is positioned in the area.

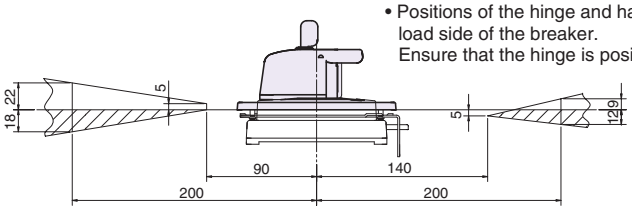

■ Outline dimensions

HL : Handle Frame Centre Line
℄ : Handle Centre Line

TPHB63S

Applicable breaker types
PS400-CF/NF/GF/NN, PS400-NE/GE, PH400-CF, PH400-CE, PS630-CF/NF/GF/NN, PS630-NE/GE, PH630-CF, PH630-CE

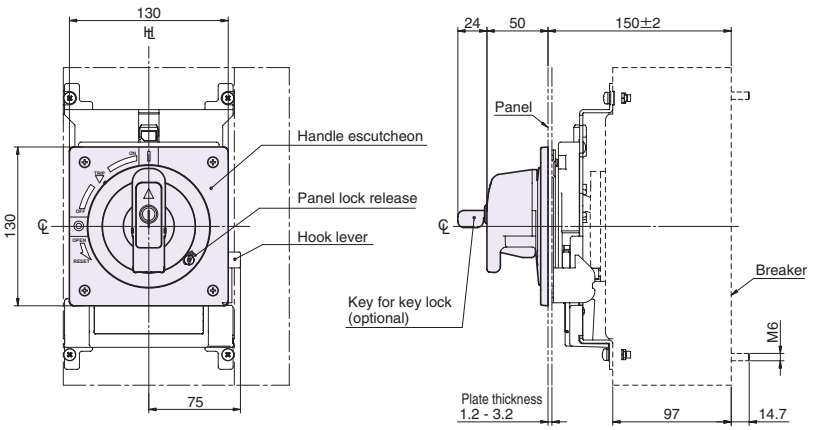

● Panel cutout dimensions

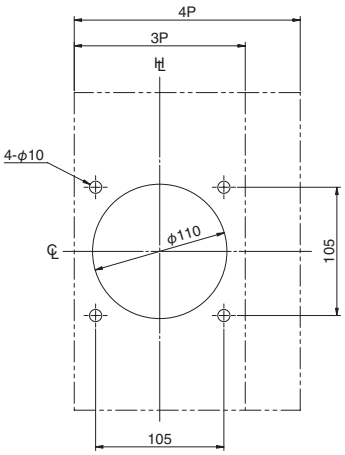

• Positions of the hinge and handle as seen from the load side of the breaker.
Ensure that the hinge is positioned in the ▨ area.

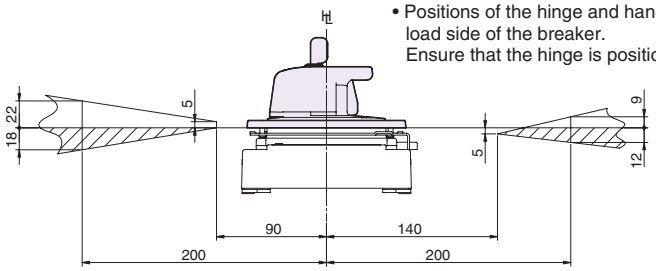

■Outline dimensions

HL : Handle Frame Centre Line
℄ : Handle Centre Line

T2HB80

Applicable breaker types	A (mm)
S630-CF/NF/NE/GN, S800-CF/NF/RF/PF/NN, ZAS630-CF/NF, ZAS800-CF/NF, NS630-NF, NS800-NF, S800-NE/RE/PE, S1000-CE/NN, ZS630-CF, ZS630-NF, ZS800-CF, ZS800-NF	150±2
H630-NE, L630-NE, H800-NE, L800-NE	187±2

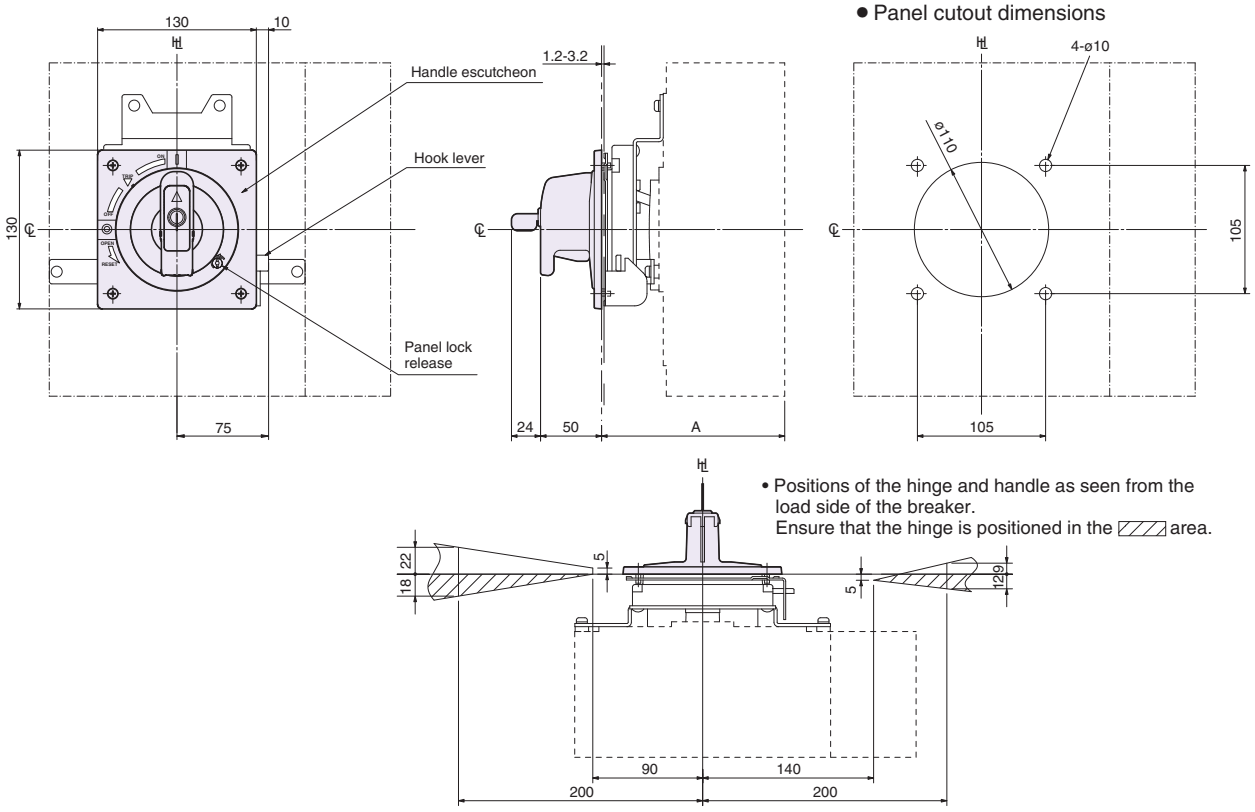

6
Accessories

4. External operating handles

(3) Breaker-mounted (HB)

The external operating handle is a tool that allows the breaker installed in a switchboard to be operated from outside.
The breaker-mounted type external operating handle is designed to be mounted directly to the breaker body.

■ Outer view [Colour: Black (Munsell N1.5)]

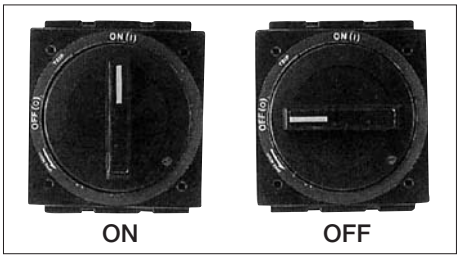

- **Double-insulated structure**
  All actuators are double insulated and employ an insulator to further enhance safety.

■ Mounting instructions

The external operating handle has not been mounted on the breakers.
For details on how to mount the handle, see the Operating Instructions packaged with the product.

[1] Mounting of external operating handle assembly

Install the circuit breakers and handles as follows.

1.1 Secured to backing plate (TFJ21BP)

- Make sure that the breaker is in the OFF position.
- Put the external operating handle assembly onto the breaker in place so that the breaker toggle is engaged with the slide lever of the assembly. Secure the assembly together with the breaker to the backing plate.

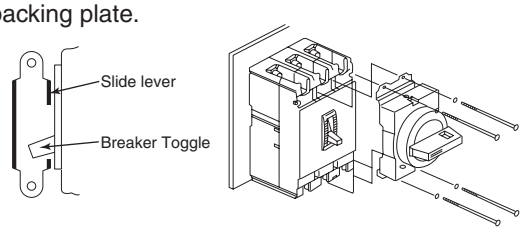

1.2 Secured to breaker cover (TFJ38X / T2HBX6)

- Make sure that the breaker is in the OFF position.
- Remove the four breaker cover mounting screws at the positions where the external operating handle assembly is secured.
- Put the handle assembly onto the breaker in place so that the breaker toggle is engaged with the slide lever of the assembly. Use the supplied mounting screws to secure the assembly to the breaker.

[2] Installation of handle escutcheon and latch plate

- Drill holes in the panel according to the panel cutout dimensions. Sandwich the panel between the handle escutcheon and latch plate and temporarily tighten using the supplied screws.
- Close the panel.
  Make adjustment so that the gap between the handle assembly and handle escutcheon is even and the assembly is not inclined against the breaker.

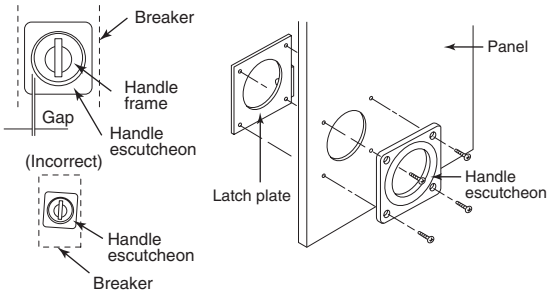

■ Breaker mounting direction

The ON (I) and OFF (○) indication of the external operating handle can be re-oriented in steps of 90 degrees with respect to the operating mechanism. This allows the indication position to remain the same whether the breaker is mounted vertically (right side up or upside down) or horizontally (on its left side or on its right side).
The upper power supply type is standard. If a non-standard type is required, state the type when ordering.

R: Right power supply type	U: Upper power supply type (standard)	L: Left power supply type
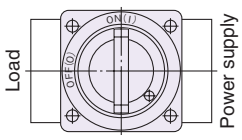	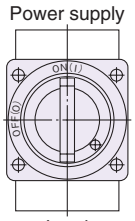	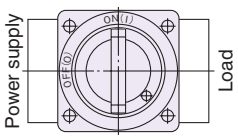

- For a change in mounting direction, see the Operating Instructions packaged with the product.

■ Panel lock mechanism

The external operating handle keeps the panel door locked when in the 'ON' position. There are two types, RESET Open and OFF Open.

(1) **RESET Open (Standard type)**
The handle is turned to the RESET OPEN position to open the panel door.

(2) **OFF Open**
The handle is turned to the OFF position to open the panel door.

- **Panel lock release knob (Standard)**
The release knob enables the panel door to be opened with the handle in the 'ON' position. To release: turn the release knob in the direction of anti-clockwise with a flat-bladed screwdriver.
- **Safety interlock (Standard)**
The safety interlock prevents the breaker from turning ON as long as the panel is open. This interlock can be released using the hook lever.

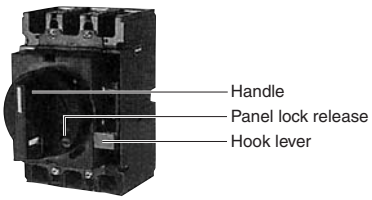

■ Toggle lock mechanism

- **Padlock (Standard)**
This mechanism allows the breaker to be padlocked in the ON or OFF position.
Padlocks are not supplied.
Up to three padlocks can be installed.

Padlock dimensions (mm)

Type of handle	A	Dia.
TFJ21BP	13 min	ø3.5-6
TFJ38X T2HBX6	19 min	

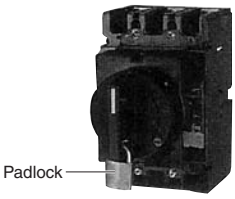

■ Protection degree (IEC 60529)

Optional dust-proof gaskets may be used to protect against dust.

IP30	Standard specification
IP50	Optional, with a dust proof packing
IP55	Special specification

Dustproof packing for IP50 (oprional) mm

Type of handle	Type of dustproof packing	A	B	C
TFJ21BP	Dustproof packing/2	93	73	7
TFJ38X T2HBX6	Dustproof packing/3	145	117	7

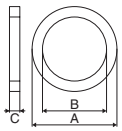

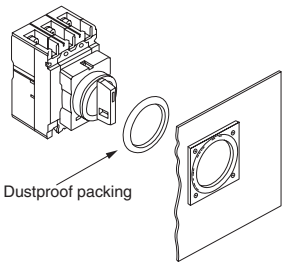

■ To be stated when ordering

Order code TFJ21BP U R 3 B

Type of external operating handle	Breaker mounting direction	Panel lock	Protection degree	Colour
TFJ21BP TFJ38X T2HBX6	U : Upper power supply type (standard) ∗ R : Right power supply type L : Left power supply type	R : RESET open ∗ F : OFF open	3 : IP30 ∗ 5 : IP50 S : IP55 (special spec.)	B : Black handle (Black base) ∗ R : Red handle (Yellow base)

∗ : Standard specification

■ Outline dimensions

ASL : Arrangement Standard Line
HL : Handle Frame Centre Line
℄ : Handle Centre Line

TFJ38X

Applicable breaker types	Mounting screw *
TL-1000NE, TL-1200NE	M6 × 110 4 pcs

* Secure the breaker to the switchboard before secure the operating handle to the breaker.

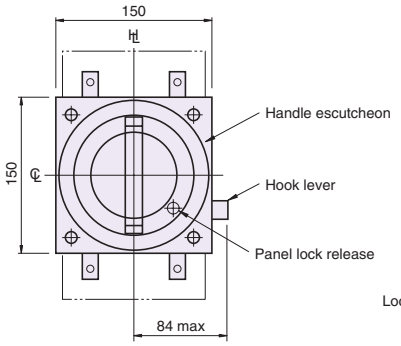

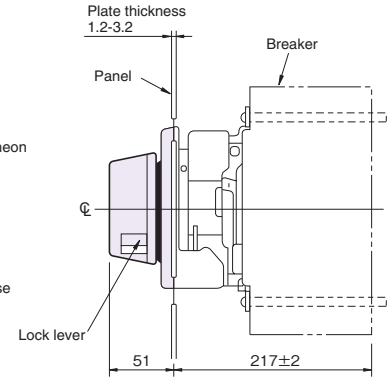

● Panel cutout dimensions

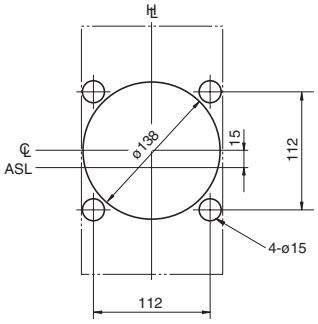

● Panel cutout dimensions Relative positions of the hinge and handle as seen from the load side of the breaker

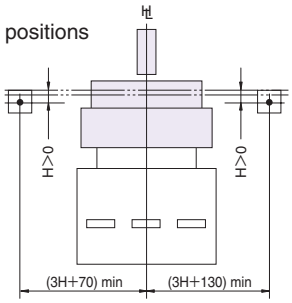

Toggle extension for TFJ38X (optional)

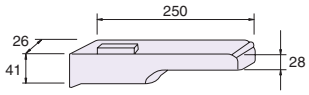

Order code
THC5

T2HBX6

Applicable breaker types	A (mm)	Mounting screw *
S1250-NE/GE/NN	197±2	M6 × 110 4 pcs
S1600-NE/NN	217±2	

* Secure the breaker to the switchboard before secure the operating handle to the breaker.

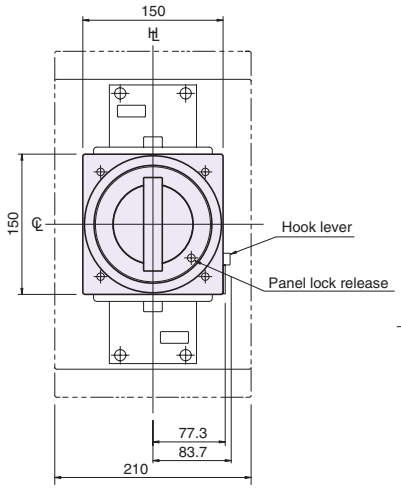

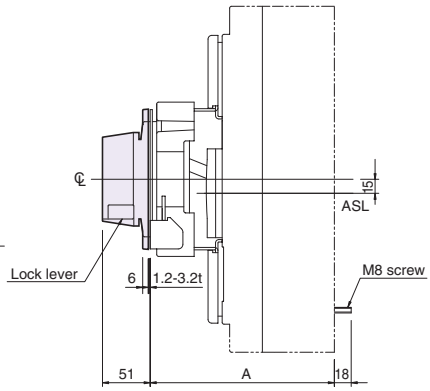

● Panel cutout dimensions

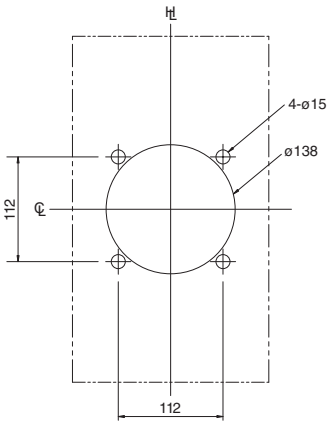

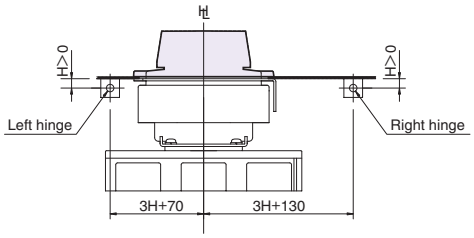

Toggle extension for T2HBX6 (optional)

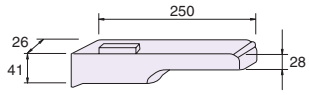

Order code
T2HAX6

4. External operating handles

(4) Door-mounted (depth adjustable) (HP)

Door-mounted type external operating handles allow breakers installed in control centers or switchboards to be manually operated from outside and complies with IEC 60204-1.
This handle assembly consists of an operation mechanism section which is to be installed in the breaker body, a handle section which is to be installed in a panel and a square shaft which couples both the sections.

■ Outer view

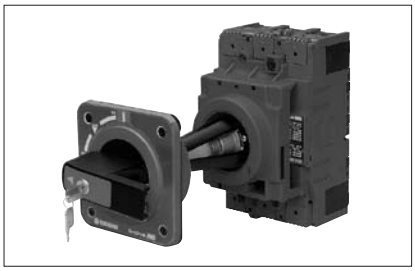

■ Operation direction of handles

Rotate the operating handle
clockwise to turn the breaker ON.

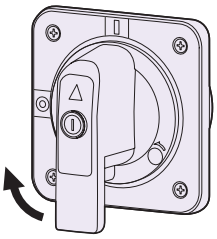

Rotate clockwise
to turn the breaker ON

■ Breaker mounting direction

The ON (**I**) and OFF (○) indication of the external operating handle can be re-oriented in steps of 90 degrees with respect to the operating mechanism.
This allows the indication position to remain the same whether the breaker is mounted vertically (right side up or upside down) or horizontally (on its left side or on its right side).

Horizontal mounting / ON to move the breaker handle right	Vertical mounting / ON to move the breaker handle up	Horizontal mounting / ON to move the breaker handle left
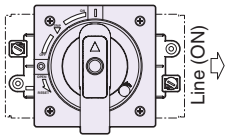	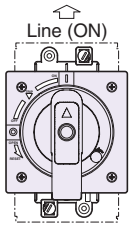	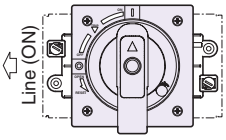

4. External operating handles

■ Panel lock mechanism

The external operating handle keeps the panel door locked when in the 'ON' position. There are two types, RESET Open and OFF Open.

(1) RESET Open (Standard type)
The handle is turned to the RESET OPEN position to open the panel door.

(2) OFF Open
The handle is turned to the OFF position to open the panel door.

- Panel lock release knob (Standard)
  The release knob enables the panel door to be opened with the handle in the 'ON' position. To release: turn the release knob in the direction of anti-clockwise with a flat-bladed screwdriver.

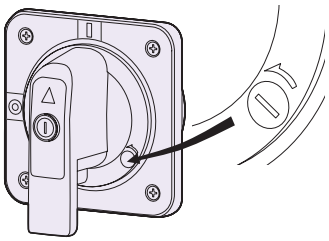

■ Toggle lock mechanism

- **Padlock (Standard)**
  This mechanism allows the breaker to be padlocked in the ON or OFF position. ∗
  Padlocks are not supplied.
  Up to three padlocks can be installed.

Padlock dimensions (mm)

Type of handle	A	Dia.
T1HP, T2HP, TPHP	13 min	ø5.5-8

- **Key lock (Optional)**
  Key locking is possible in the ON or OFF position.

∗ : Padlocking in OFF position only required by IEC 60204-1 is also available.
Please specify when ordering.

■ Protection degree (IEC 60529)

IP54	Standard specification
IP65	Special specification

■ Dimensions of square shafts available

There are the following shaft dimensions available. Select an appropriate shaft depending on the mounting position of the breaker. Cut the shaft to an appropriate length if required. Coat the cut end faces of the shaft with an anti-corrosion paint.

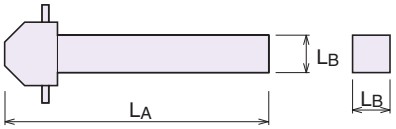

Shafts order codes	L_A(mm)	L_B(mm)
T2PS251	121	8
T2PS252	221	
T2PS253	321	
T2PS254	421	
T2PS401	147.5	14
T2PS402	247.5	
T2PS403	347.5	
T2PS404	447.5	

■ To be stated when ordering

Order code T2HP25 R 5 B T P

Type of external operating handle	Panel lock	Protection degree	Colour	Key lock / Padlock	Series
T2HP16L T2HP40 T2HP25L T2HP80 T2HP12 T2HPX6 T2HP25	R : RESET open ∗ F : OFF open	5 : IP54 ∗ 6 : IP65	B : Black handle (Grey Blue base) ∗ R : Red handle (Yellow base)	T : with padlock (Lock in ON or OFF) ∗ W : with key lock and padlock (Lock in ON or OFF) N : with padlock (lock in OFF) K : with key lock and padlock (lock in OFF)	P : PRO Series ①
TPHP16S TPHP63S TPHP25S T1HPX6 ②					—

∗ : standard specification
Note ① : For T2HP, specify "P". Do not specify anything in the case of T1HP or TPHP (blank).
Note ② : "Panel lock" is applied "RESET open" only.

HL : Handle Frame Centre Line
℄ : Handle Centre Line

■ Outline dimensions

TPHP16S

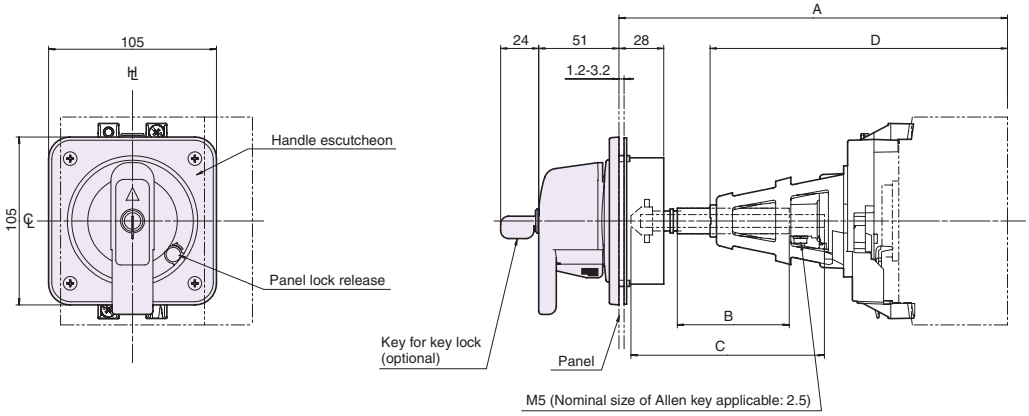

● Panel cutout dimensions

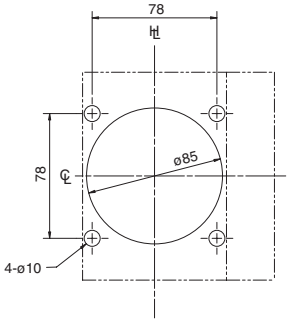

• Positions of the hinge and handle as seen from the load side of the breaker. Ensure that the hinge is positioned in the ▨ area.

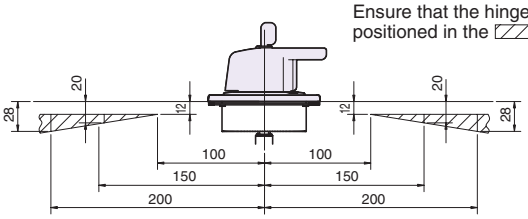

Applicable breaker types	A ①	B	C	D	Square shaft applicable	Shaft support
PS50-PF, PS125-NF/PF/NN, PS125-NE/PE	229 min.	56	107	186	T2PS251	Yes
	243 max.	70	121	186		
	343 max.	170	221	186	T2PS252	
	443 max.	270	321	186	T2PS253	
	543 max.	370	421	186	T2PS254	

Notes:

①: "Min (minimum)" means the minimum possible distance from the panel surface to the breaker mounting surface, which can be formed by cutting the square shaft.
"Max (maximum)" means the maximum distance of the same section, which is formed with no cutting of the square shaft.

A: Distance from the panel surface to the breaker mounting surface
B: Length of the tube to cover the square shaft
C: Length of the square shaft
D: Distance from the tip of the shaft support to the breaker mounting surface

4. External operating handles

HL : Handle Frame Centre Line
℄ : Handle Centre Line

■ Outline dimensions

TPHP25S

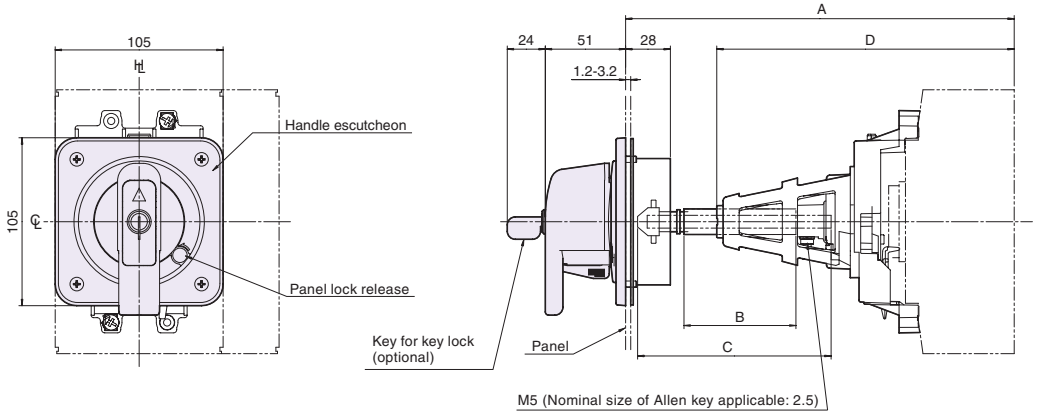

● Panel cutout dimensions

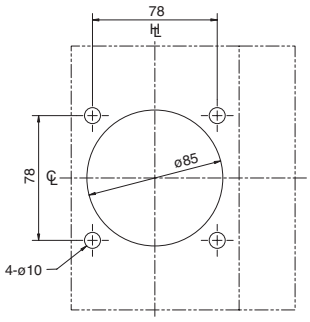

• Positions of the hinge and handle as seen from the load side of the breaker. Ensure that the hinge is positioned in the area.

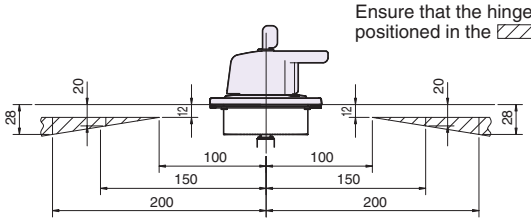

Applicable breaker types	A ①	B	C	D	Square shaft applicable	Shaft support
PS250-PF/NN, PS250-NE/PE	229 min.	56	107	186	T2PS251	Yes
	243 max.	70	121	186		
	343 max.	170	221	186	T2PS252	
	443 max.	270	321	186	T2PS253	
	543 max.	370	421	186	T2PS254	

Notes:

①: "Min (minimum)" means the minimum possible distance from the panel surface to the breaker mounting surface, which can be formed by cutting the square shaft.
"Max (maximum)" means the maximum distance of the same section, which is formed with no cutting of the square shaft.

A: Distance from the panel surface to the breaker mounting surface
B: Length of the tube to cover the square shaft
C: Length of the square shaft
D: Distance from the tip of the shaft support to the breaker mounting surface

HL : Handle Frame Centre Line
℄ : Handle Centre Line

■ Outline dimensions

T2HP16L

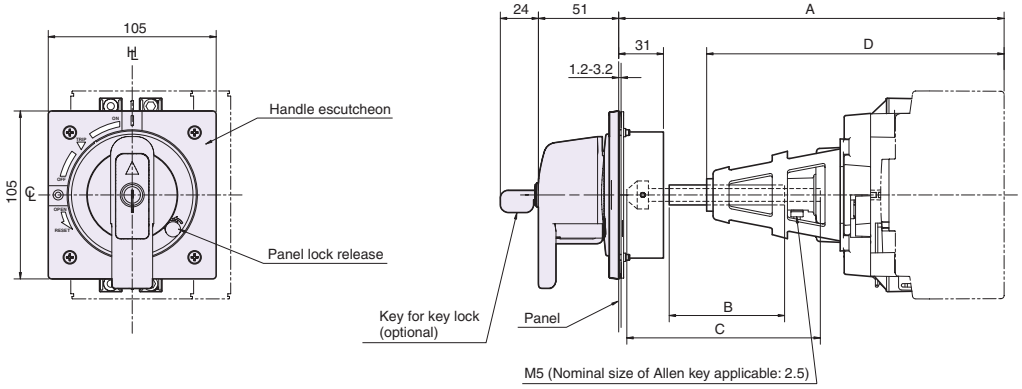

● Panel cutout dimensions

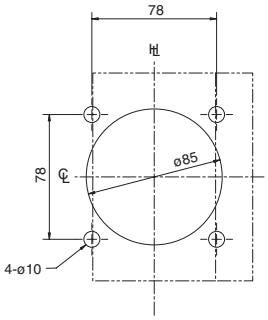

• Positions of the hinge and handle as seen from the load side of the breaker. Ensure that the hinge is positioned in the area.

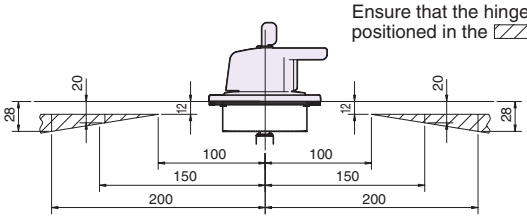

Applicable breaker types	A ①	B	C	D	Square shaft applicable	Shaft support
S50-SF, S125-SF, S125-SN, ZAS125-SF, NAE125-SF, NAS125-SF, NS125-SF, ZS50-SF, ZS125-SF, ZS100-SM, ZNS125-SF, PE30-NF/NN, PS30-NF, PE50-NF/NN/NFZ/NFN, PS50-NF/NFZ, PE60-NF, PS60-NF, PE125-NF/NN/NFZ/NFN, PZE30-NF, PZS30-NF, PZE50-NF/NFN, PZS50-NF, PZE60-NF, PZS60-NF, PZE125-NF/NFN	229 min.	56	107	186	T2PS251	Yes
	243 max.	70	121	186		
	343 max.	170	221	186	T2PS252	
	443 max.	270	321	186	T2PS253	
	543 max.	370	421	186	T2PS254	

Notes:

①: "Min (minimum)" means the minimum possible distance from the panel surface to the breaker mounting surface, which can be formed by cutting the square shaft.
"Max (maximum)" means the maximum distance of the same section, which is formed with no cutting of the square shaft.

A: Distance from the panel surface to the breaker mounting surface
B: Length of the tube to cover the square shaft
C: Length of the square shaft
D: Distance from the tip of the shaft support to the breaker mounting surface

4. External operating handles

HL : Handle Frame Centre Line
℄ : Handle Centre Line

■ Outline dimensions

T2HP25L

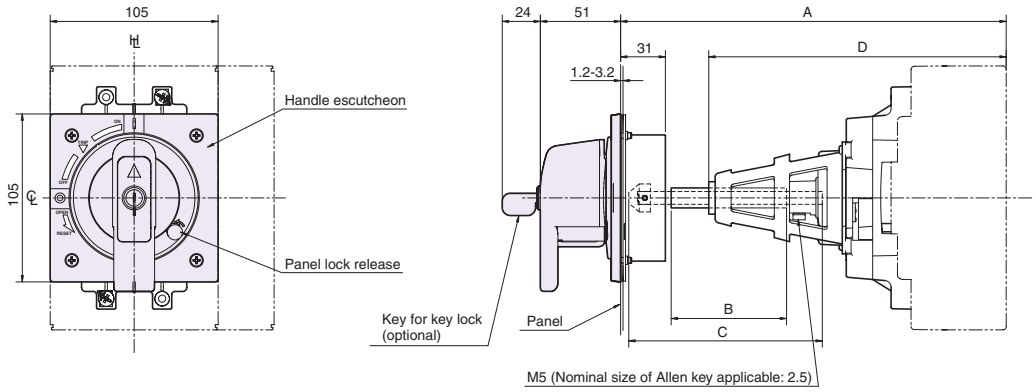

● Panel cutout dimensions

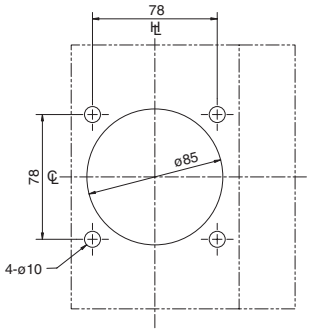

• Positions of the hinge and handle as seen from the load side of the breaker. Ensure that the hinge is positioned in the area.

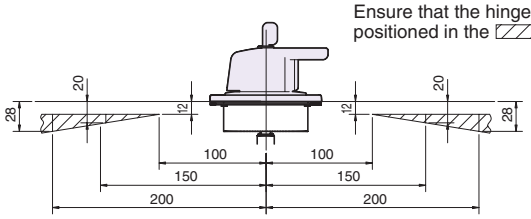

Applicable breaker types	A ①	B	C	D	Square shaft applicable	Shaft support
E250-SF, S250-SF, S250-SM/SN, ZAE250-SF, ZAS250-SF, NE250-SF, NS250-SF, ZE250-SF, ZS250-SF/SM, ZNE250-SF, ZNS250-SF, NAE250-SF, NAS250-SF	229 min.	56	107	186	T2PS251	Yes
	243 max.	70	121	186		
	343 max.	170	221	186	T2PS252	
	443 max.	270	321	186	T2PS253	
	543 max.	370	421	186	T2PS254	

Notes:

①: "Min (minimum)" means the minimum possible distance from the panel surface to the breaker mounting surface, which can be formed by cutting the square shaft.
"Max (maximum)" means the maximum distance of the same section, which is formed with no cutting of the square shaft.

A: Distance from the panel surface to the breaker mounting surface
B: Length of the tube to cover the square shaft
C: Length of the square shaft
D: Distance from the tip of the shaft support to the breaker mounting surface

HL : Handle Frame Centre Line
℄ : Handle Centre Line

■ Outline dimensions

T2HP12

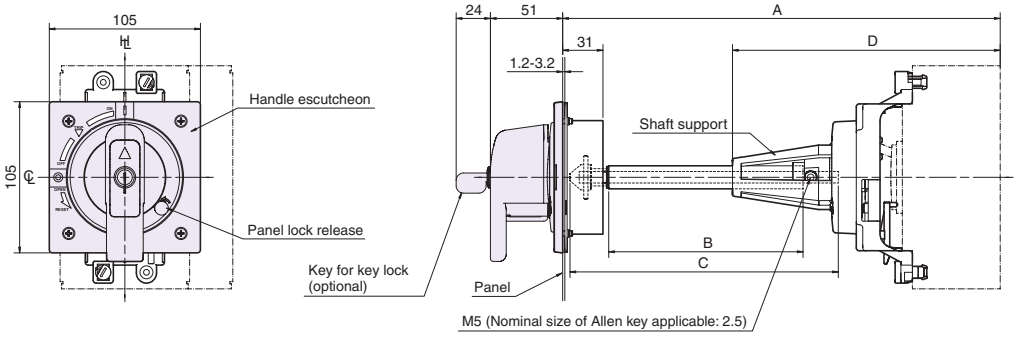

● Panel cutout dimensions

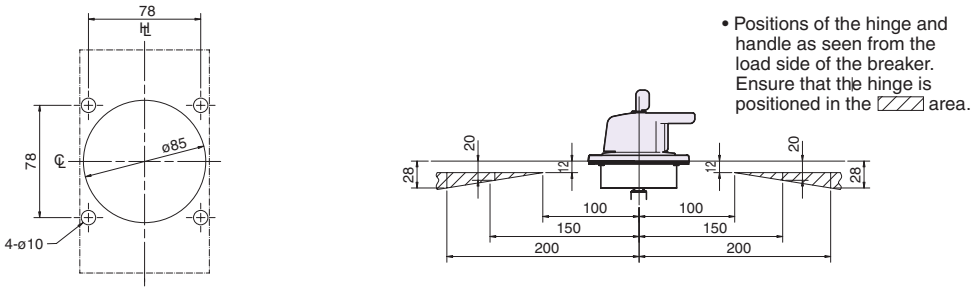

Applicable breaker types	A ①	B	C	D	Square shaft applicable	Shaft support
S100-GF, S125-GF, ZAS50-GF, ZAS100-GF, ZAS125-GF, ZS100-GF, ZS125-GF	229 min.	56	107	186	T2PS251	Yes
	243 max.	70	121	186		
	343 max.	170	221	186	T2PS252	
	443 max.	270	321	186	T2PS253	
	543 max.	370	421	186	T2PS254	

Notes:

①: "Min (minimum)" means the minimum possible distance from the panel surface to the breaker mounting surface, which can be formed by cutting the square shaft.
"Max (maximum)" means the maximum distance of the same section, which is formed with no cutting of the square shaft.

A: Distance from the panel surface to the breaker mounting surface
B: Length of the tube to cover the square shaft
C: Length of the square shaft
D: Distance from the tip of the shaft support to the breaker mounting surface

4. External operating handles

HL : Handle Frame Centre Line
℄ : Handle Centre Line

■ Outline dimensions

T2HP25

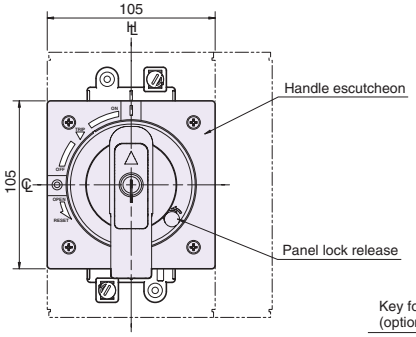

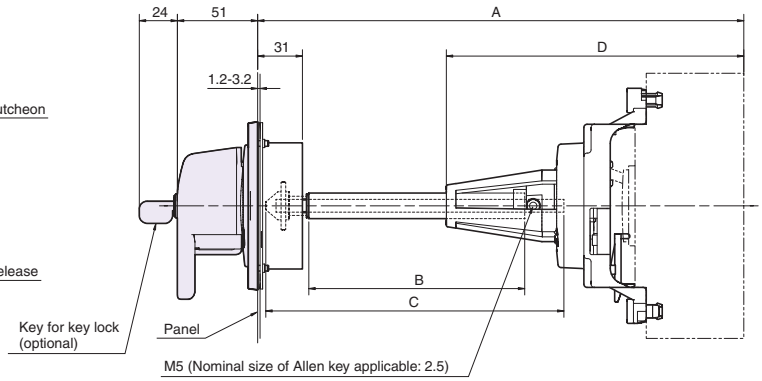

● Panel cutout dimensions

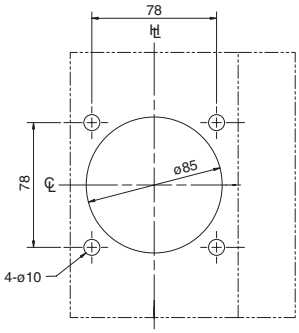

• Positions of the hinge and handle as seen from the load side of the breaker. Ensure that the hinge is positioned in the area.

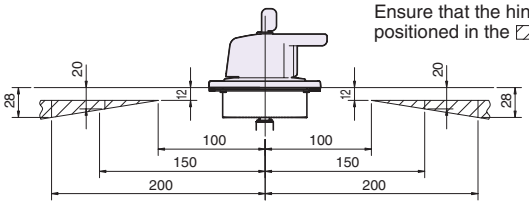

Applicable breaker types	A ①	B	C	D	Square shaft applicable	Shaft support
ZAS225-GF, ZAS250-GF, ZS225-GF, ZS250-GF	229 min.	56	107	186	T2PS251	Yes
	243 max.	70	121	186		
	343 max.	170	221	186	T2PS252	
	443 max.	270	321	186	T2PS253	
	543 max.	370	421	186	T2PS254	
H100-NF, H125-NF, H225-NF/NE, H250-NF, L100-NF, L125-NF, L225-NF, L250-NF	264 min.	56	107	221	T2PS251	
	278 max.	70	121	221		
	378 max.	170	221	221	T2PS252	
	478 max.	270	321	221	T2PS253	
	578 max.	370	421	221	T2PS254	

Notes:

①: "Min (minimum)" means the minimum possible distance from the panel surface to the breaker mounting surface, which can be formed by cutting the square shaft.
"Max (maximum)" means the maximum distance of the same section, which is formed with no cutting of the square shaft.

A: Distance from the panel surface to the breaker mounting surface
B: Length of the tube to cover the square shaft
C: Length of the square shaft
D: Distance from the tip of the shaft support to the breaker mounting surface

HL : Handle Frame Centre Line
℄ : Handle Centre Line

■ Outline dimensions

T2HP40

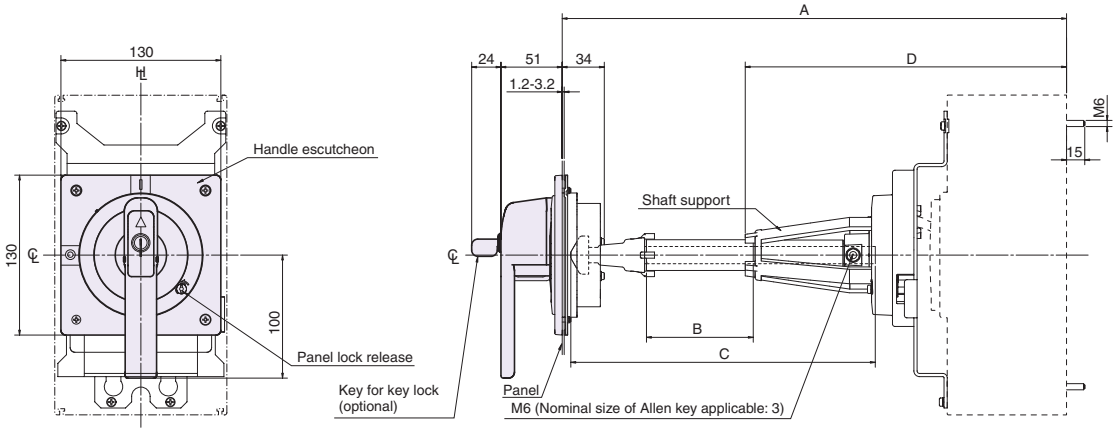

● Panel cutout dimensions

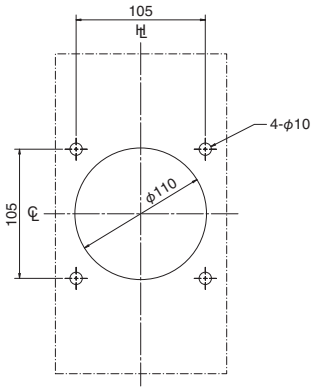

• Positions of the hinge and handle as seen from the load side of the breaker. Ensure that the hinge is positioned in the ▨ area.

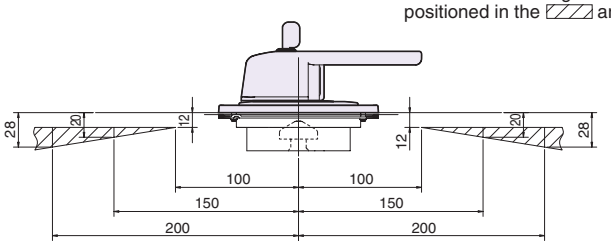

Applicable breaker types	A ①	B	C	D	Square shaft applicable	Shaft support
E400-NF, ZAE400-NF, ZAS400-NF, ZAS400-GF, NAE400-NF, NAS400-NF, NE400-NF, NS400-NF, ZE400-NF, ZS400-NF, ZS400-GF, ZNE400-NF, ZNS400-NF	270 min.	12	107.5	——	T2PS401	Non
	310 max. ②	52	147.5	——		
	340 min. ②	10	177.5	261	T2PS402	Yes
	410 max.	80	247.5	261		
	510 max.	180	347.5	261	T2PS403	
	610 max.	280	447.5	261	T2PS404	
H400-NE, L400-NE	307 min.	12	107.5	——	T2PS401	Non
	347 max.③	52	147.5	——		
	377 min.③	10	177.5	298	T2PS402	Yes
	447 max.	80	247.5	298		
	547 max.	180	347.5	298	T2PS403	
	647 max.	280	447.5	298	T2PS404	

Notes:

①: "Min (minimum)" means the minimum possible distance from the panel surface to the breaker mounting surface, which can be formed by cutting the square shaft.
"Max (maximum)" means the maximum distance of the same section, which is formed with no cutting of the square shaft.

②: When dimension A is in a range of 310 mm to 340 mm, cut square shaft T2PS402 to an appropriate length and use the shaft without shaft support.

③: When dimension A is in a range of 347mm to 377mm, cut square shaft T2PS402 to an appropriate length and use the shaft without shaft support.

A: Distance from the panel surface to the breaker mounting surface
B: Length of the tube to cover the square shaft
C: Length of the square shaft
D: Distance from the tip of the shaft support to the breaker mounting surface

4. External operating handles

HL : Handle Frame Centre Line
℄ : Handle Centre Line

■ Outline dimensions

TPHP63S

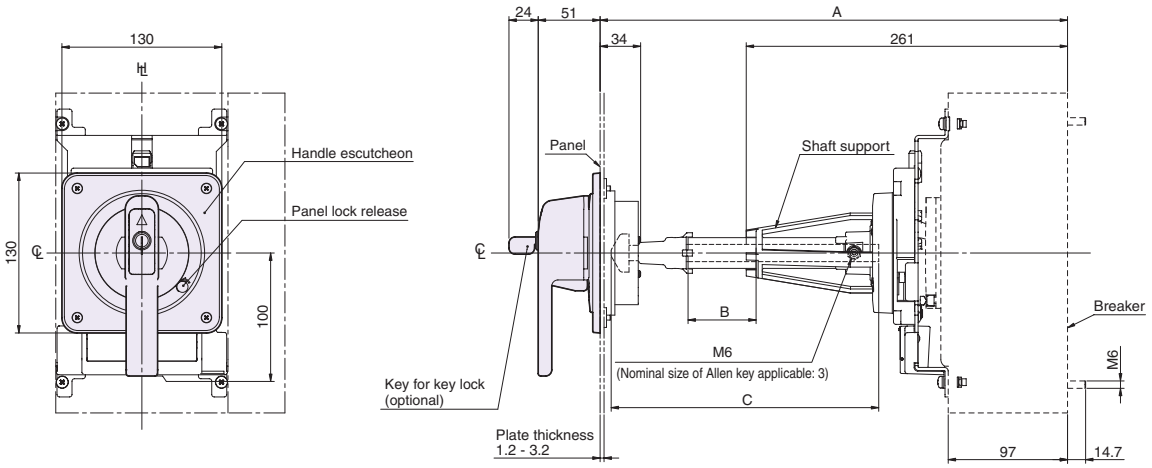

● Panel cutout dimensions

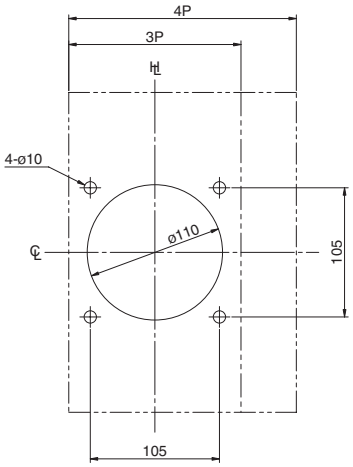

• Positions of the hinge and handle as seen from the load side of the breaker. Ensure that the hinge is positioned in the area.

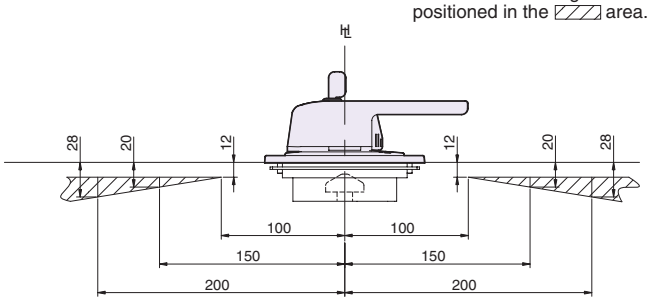

Applicable breaker types	A ①	B	C	Square shaft applicable	Shaft support
PS400-CF/NF/GF/NN, PS400-NE/GE, PH400-CF, PH400-CE, PS630-CF/NF/GF/NN, PS630-NE/GE, PH630-CF, PH630-CE	270 min.	12	107.5	T2PS401	Non
	310 max. ②	52	147.5		
	340 min. ②	10	177.5	T2PS402	Yes
	410 max.	80	247.5		
	510 max.	180	347.5	T2PS403	
	610 max.	280	447.5	T2PS404	

Notes:

①: "Min (minimum)" means the minimum possible distance from the panel surface to the breaker mounting surface, which can be formed by cutting the square shaft.
"Max (maximum)" means the maximum distance of the same section, which is formed with no cutting of the square shaft.

②: When dimension A is in a range of 310 mm to 340 mm, cut square shaft T2PS402 to an appropriate length and use the shaft without shaft support.

A: Distance from the panel surface to the breaker mounting surface
B: Length of the tube to cover the square shaft
C: Length of the square shaft

HL : Handle Frame Centre Line
℄ : Handle Centre Line

■ Outline dimensions

T2HP80

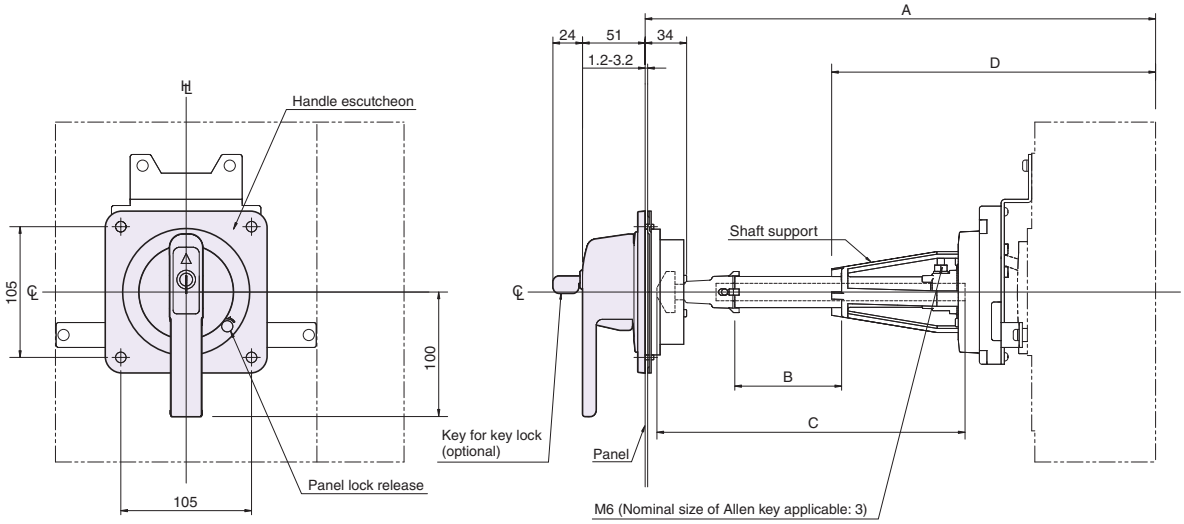

● Panel cutout dimensions

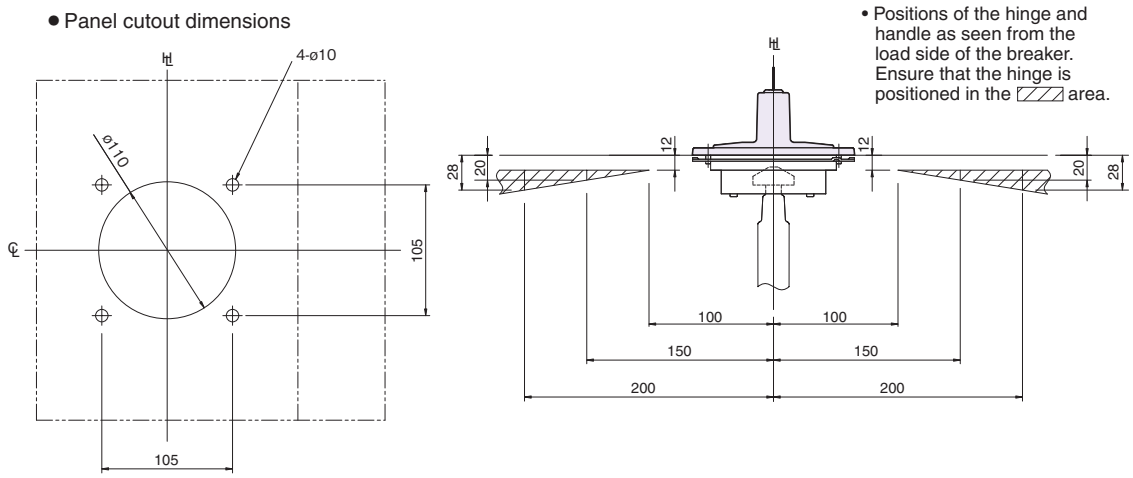

Applicable breaker types	A ①	B	C	D	Square shaft applicable	Shaft support
S630-CF/NF/NE/GN, S800-CF/NF/RF/PF/NN, ZAS630-CF/NF, ZAS800-CF/NF, NS630-NF, NS800-NF, S800-NE/RE/PE, S1000-CE/NN, ZS630-CF, ZS630-NF, ZS800-CF, ZS800-NF	270 min.	12	107.5	——	T2PS401	Non
	310 max. ②	52	147.5	——		
	340 min. ②	10	177.5	261	T2PS402	Yes
	410 max.	80	247.5	261		
	510 max.	180	347.5	261	T2PS403	
	610 max.	280	447.5	261	T2PS404	
H630-NE, L630-NE, H800-NE, L800-NE	307 min.	12	107.5	——	T2PS401	Non
	347 max.③	52	147.5	——		
	377 min.③	10	177.5	298	T2PS402	Yes
	447 max.	80	247.5	298		
	547 max.	180	347.5	298	T2PS403	
	647 max.	280	447.5	298	T2PS404	

Notes:

①: "Min (minimum)" means the minimum possible distance from the panel surface to the breaker mounting surface, which can be formed by cutting the square shaft.
"Max (maximum)" means the maximum distance of the same section, which is formed with no cutting of the square shaft.

②: When dimension A is in a range of 310 mm to 340 mm, cut square shaft T2PS402 to an appropriate length and use the shaft without shaft support.

③: When dimension A is in a range of 347mm to 377mm, cut square shaft T2PS402 to an appropriate length and use the shaft without shaft support.

A: Distance from the panel surface to the breaker mounting surface
B: Length of the tube to cover the square shaft
C: Length of the square shaft
D: Distance from the tip of the shaft support to the breaker mounting surface

4. External operating handles

ASL : Arrangement Standard Line
HL : Handle Frame Centre Line
℄ : Handle Centre Line

■ Outline dimensions

T1HPX6, T2HPX6

Type of external operating handle	Applicable breaker types
T2HPX6	**S1250-NE/GE/NN, S1600-NE/NN**
T1HPX6 ②	**TL-1000NE, TL-1200NE**

Note ②: "Panel lock" is apply "RESET open" only.

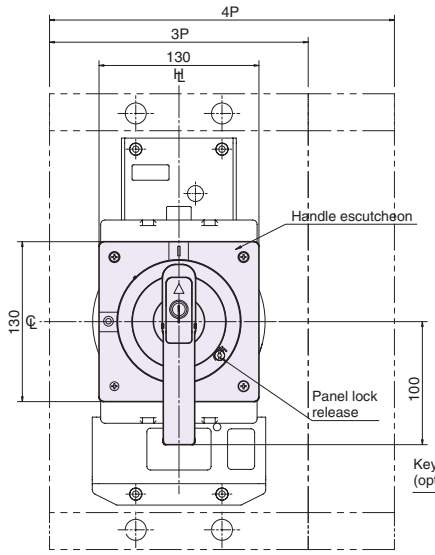

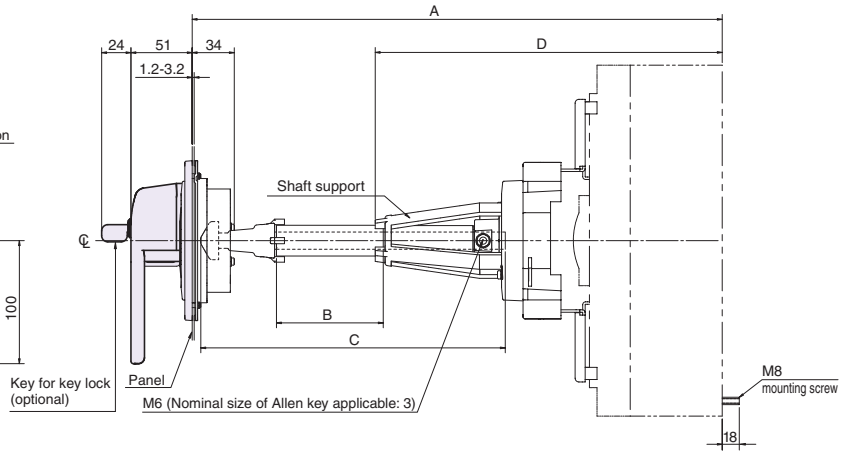

● Panel cutout dimensions

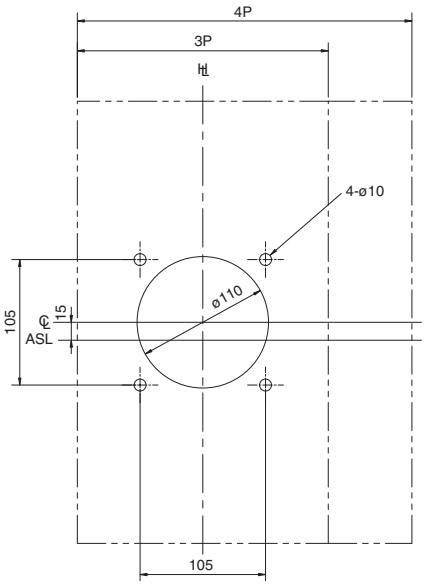

• Positions of the hinge and handle as seen from the load side of the breaker. Ensure that the hinge is positioned in the ▨ area.

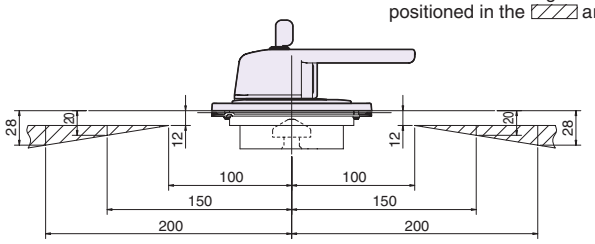

Applicable breaker types	A ①	B	C	D	Square shaft applicable	Shaft support
S1250-NE/GE/NN	367 min.	52	147.5	—	T2PS401	Non
	467 max.	80	247.5	317	T2PS402	Yes
	567 max.	180	347.5	317	T2PS403	
	667 max.	280	447.5	317	T2PS404	
S1600-NE/NN, TL-1000NE, TL-1200NE	387 min.	52	147.5	—	T2PS401	Non
	487 max.	80	247.5	337	T2PS402	Yes
	587 max.	180	347.5	337	T2PS403	
	687 max.	280	447.5	337	T2PS404	

Notes:

①: "Min (minimum)" means the minimum possible distance from the panel surface to the breaker mounting surface, which can be formed by cutting the square shaft.
"Max (maximum)" means the maximum distance of the same section, which is formed with no cutting of the square shaft.

A: Distance from the panel surface to the breaker mounting surface
B: Length of the tube to cover the square shaft
C: Length of the square shaft
D: Distance from the tip of the shaft support to the breaker mounting surface

5. Mechanical interlock

The slide interlock provides a mechanical interlock between two breakers so that only one of the two can be closed. There are four types: slide type, rear-connected type, link type, and wire type.

(1) Slide interlock (MS)

Moving the slide on the front of the breaker left and right allows activation or deactivation of the interlock.

Dimensions, mm

Frame size (A)	Types of MCCBs	Types of ELCBs	Number of poles	Breaker connection method ①	Interlock Order codes	A	B	C
30	**E30-NM, S30-NM**	**ZE30-NM, ZS30-NM**	2	FC	T2MS052NF	85	42.5	83
			3	FC	T2MS053NF	110	55	108
50	**E50-NM, S50-NM**	**ZE50-NM, ZS50-CM**	2	FC	T2MS052NF	85	42.5	83
			3	FC	T2MS053NF	110	55	108
100	**E100-NM**	**ZE100-NM**	2	FC	T2MS052NF	85	42.5	83
			3	FC	T2MS053NF	110	55	108

Notes:

①: In the case of RC, the interlock device is mounted on the surface of the breaker cover and the parts are different. Please contact us for details.

(1): The terminal block can not be fitted to the right-hand side of the left breaker and to the left-hand side of the right breaker.

(2): UVT cannot be fitted to the left circuit breaker.

℄ : Handle Frame Centre Line

℄ : Handle Centre Line

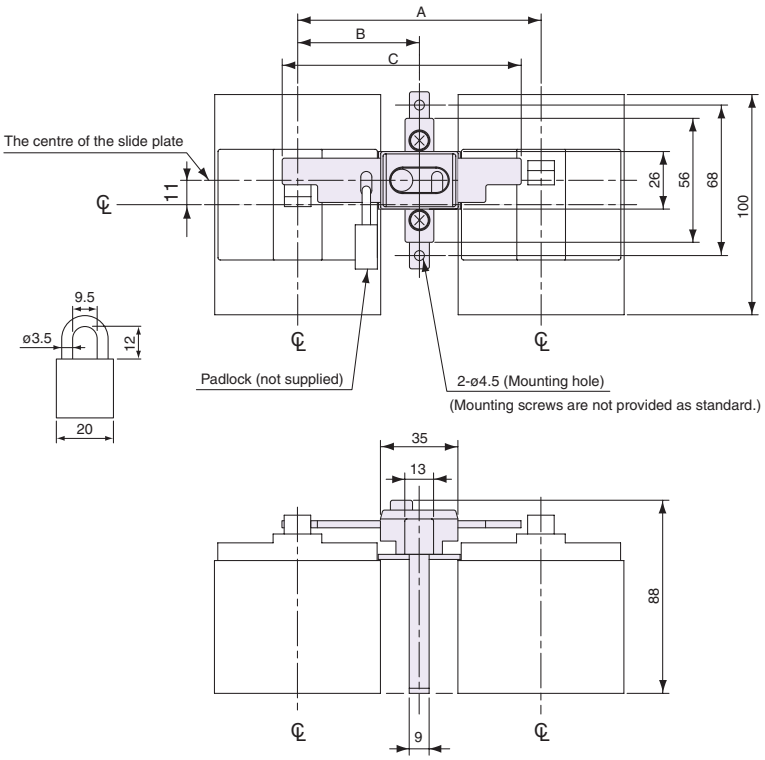

Drilling plan (front view)

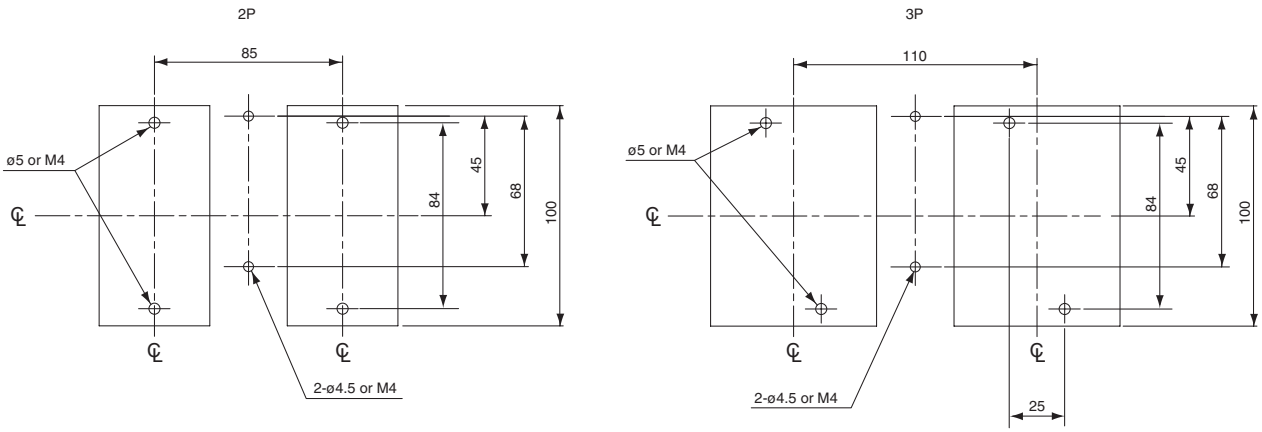

3 Externally mounted accessories

(1) Slide interlock (MS)

HL : Handle Frame Centre Line
℄ : Handle Centre Line

Dimensions, mm

Frame size (A)	Types of MCCBs	Types of ELCBs	Number of poles	Breaker connection method	Interlock Order codes
50, 60, 100, 125	**S50-SF, S125-SF, S125-SN, ZAS125-SF, NS125-SF**	**ZS50-SF, ZS125-SF, ZS100-SM, ZNS125-SF**	3	FC, RC	T2MS16L3SF
			4	FC, RC	T2MS16L4SF
	PE30-NF/NN, PS30-NF, PE50-NF/NN/NFZ/NFN, PS50-NF/NFZ, PE60-NF, PS60-NF, PE125-NF/NN/NFZ/NFN	**PZE30-NF, PZS30-NF, PZE50-NF/NFN, PZS50-NF, PZE60-NF, PZS60-NF, PZE125-NF/NFN**	3	FC, RC	T2MS16L3SF

Notes:
1: The terminal block can not be fitted to the right-hand side of the left breaker and to the left-hand side of the right breaker.
2: UVT with time-delay cannot be fitted to the left circuit breaker.

Panel cutout, A (front view)

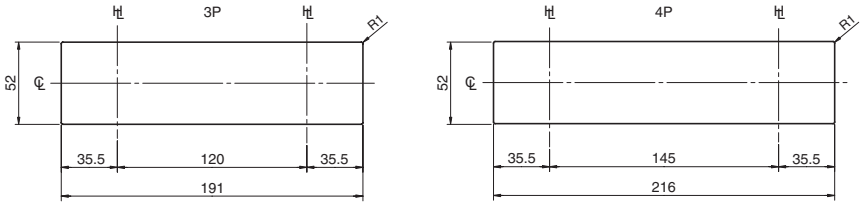

The cutout dimensions allow for a side clearance of 1.0mm from the bank of the breaker.

Panel cutout, B (front view)

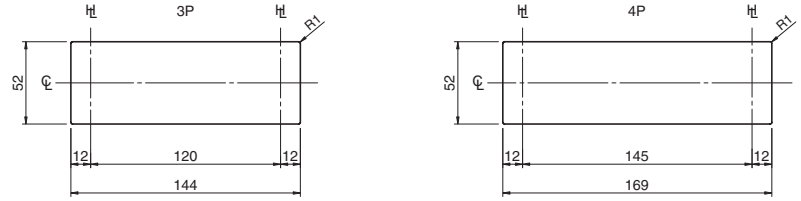

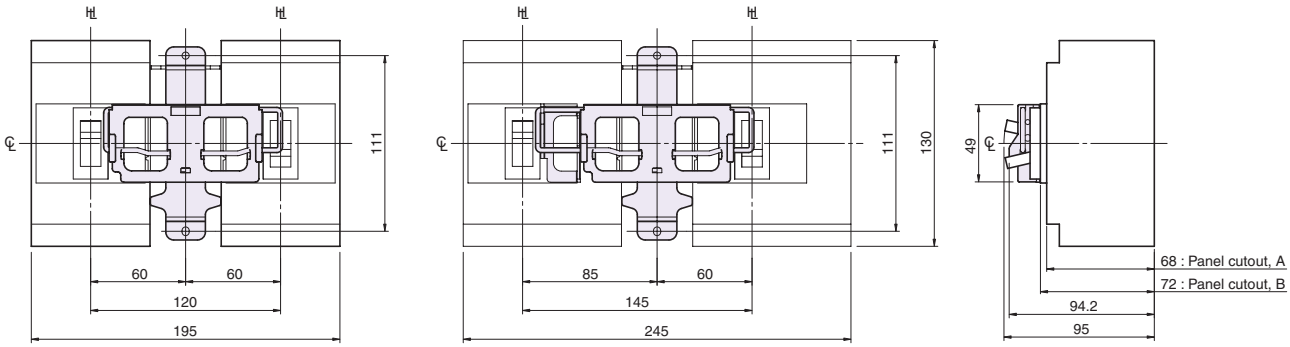

Drilling plan (front view)

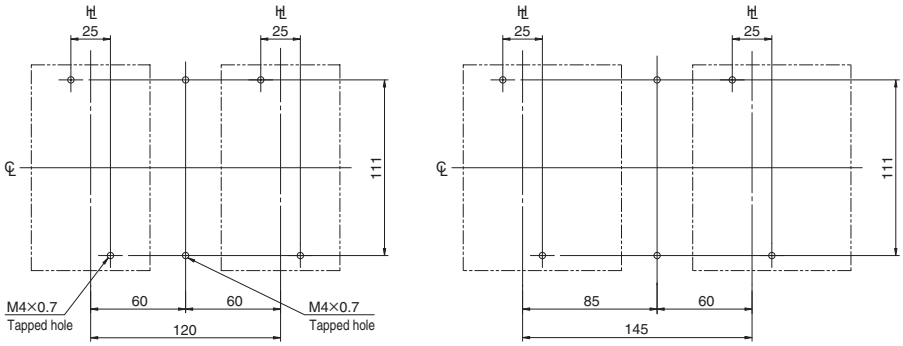

HL : Handle Frame Centre Line
℄ : Handle Centre Line

Frame size (A)	Types of MCCBs	Number of poles	Breaker connection method	Interlock Order codes
30, 50, 60, 100, 125	**S50-SF**	3	PMC	T2MS16L3SC
	S125-SF, S125-SN			
	PE30-NF/NN, PS30-NF			
	PE50-NF/NN			
	PS50-NF, PE60-NF, PS60-NF			
	PE125-NF/NN			

Notes:
1: The terminal block can not be fitted to the right-hand side of the left breaker and to the left-hand side of the right breaker.
2: UVT with time-delay cannot be fitted to the left circuit breaker.

Panel cutout, A (front view)

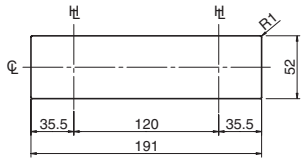

The cutout dimensions allow for a side clearance of 1.0mm from the bank of the breaker.

Panel cutout, B (front view)

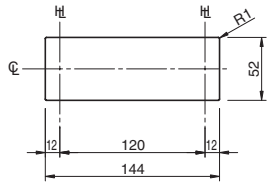

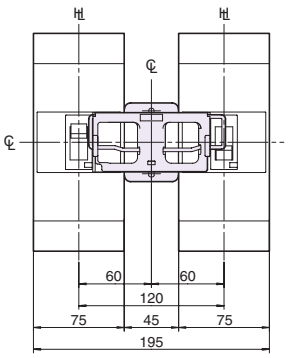

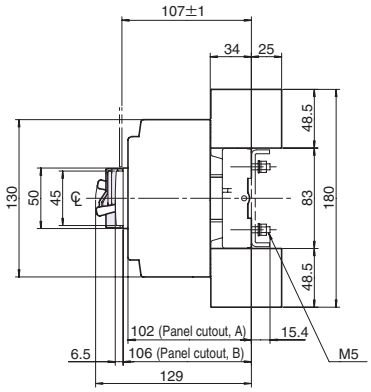

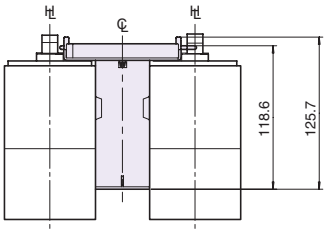

Drilling plan (front view)

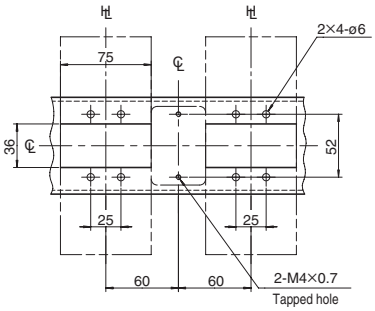

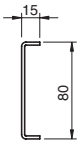

3 Externally mounted accessories

(1) Slide interlock (MS)

HL : Handle Frame Centre Line
℄ : Handle Centre Line

Dimensions, mm

Frame size (A)	Types of MCCBs	Number of poles	Breaker connection method	Interlock Order codes
50, 100, 125	**PS50-PF, PS125-NF/PF/NN, PS125-NE/PE**	3	FC、RC	TPMS163SF
		4	FC、RC	TPMS164SF

Notes:
1: The terminal block can not be fitted to the right-hand side of the left breaker and to the left-hand side of the right breaker.
2: UVT with time-delay cannot be fitted to the left circuit breaker.
3: For high-performance electronic smart circuit breakers, the panel cutout dimensions will vary. Please contact us for details.

The cutout dimensions allow for a side clearance of 1.0mm from the bank of the breaker.

Panel cutout, A (front view)

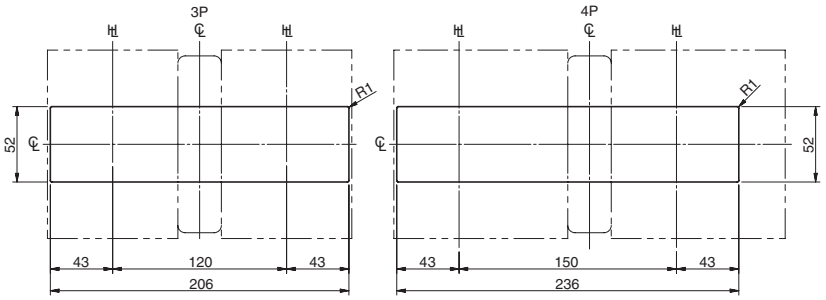

Drilling plan (front view)

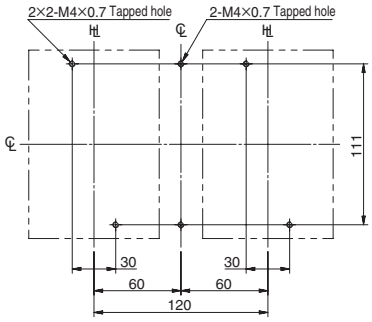

Panel cutout, B (front view)

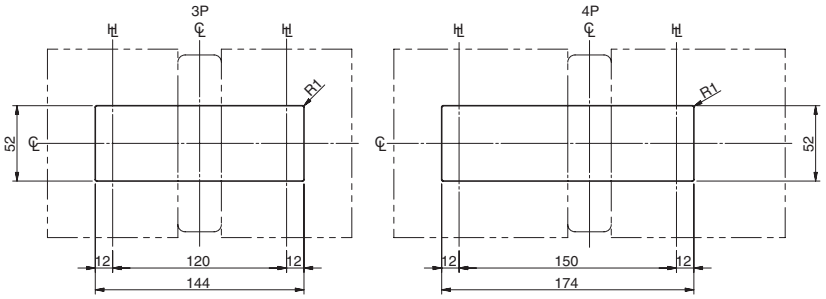

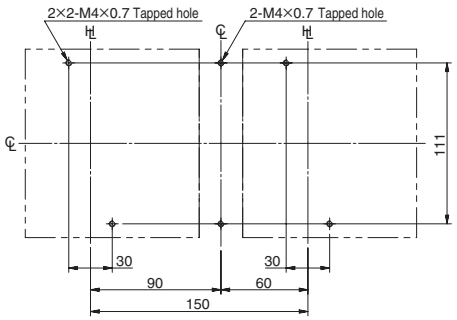

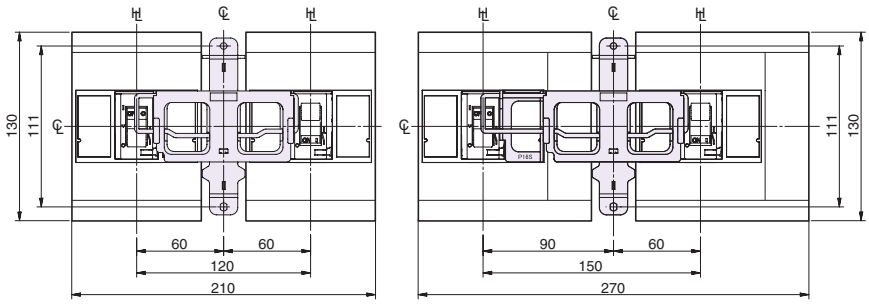

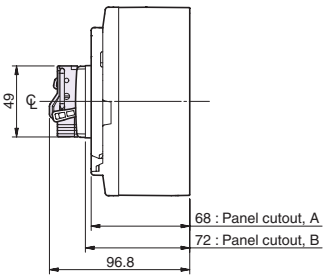

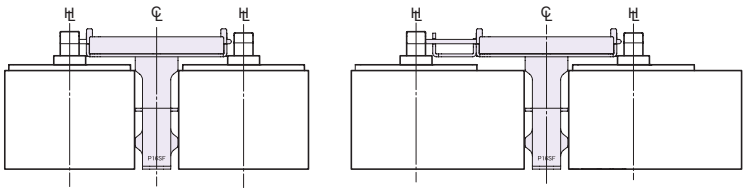

HL : Handle Frame Centre Line
℄ : Handle Centre Line

Dimensions, mm

Frame size (A)	Types of MCCBs	Number of poles	Breaker connection method	Interlock Order codes
50, 100, 125	**PS50-PF, PS125-NF/PF/NN, PS125-NE/PE**	3	PMB	TPMS163SP
		4	PMB	TPMS164SP

Notes:

1: The terminal block can not be fitted to the right-hand side of the left breaker and to the left-hand side of the right breaker.

2: UVT with time-delay cannot be fitted to the left circuit breaker.

3: For high-performance electronic smart circuit breakers, the panel cutout dimensions will vary. Please contact us for details.

Panel cutout, A (front view)

The cutout dimensions allow for a side clearance of 1.0mm from the bank of the breaker.

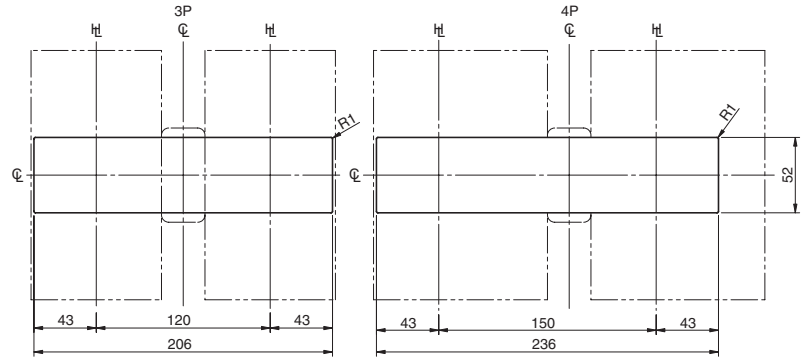

Drilling plan (front view)

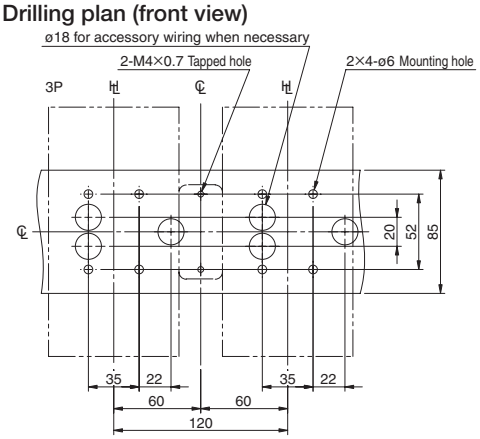

Panel cutout, B (front view)

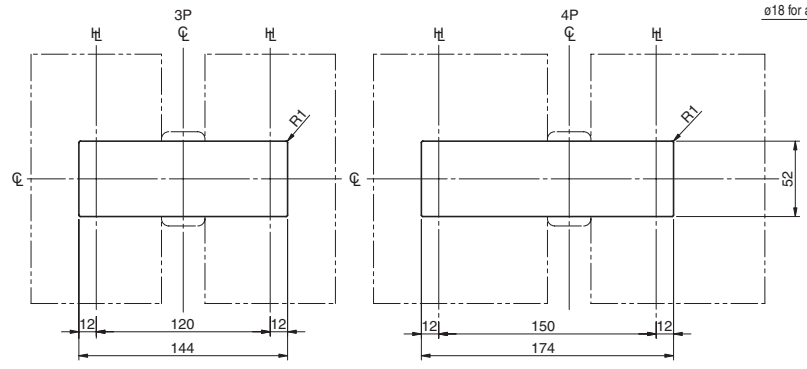

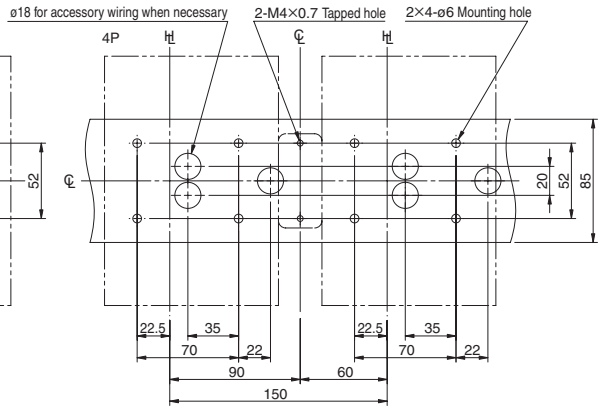

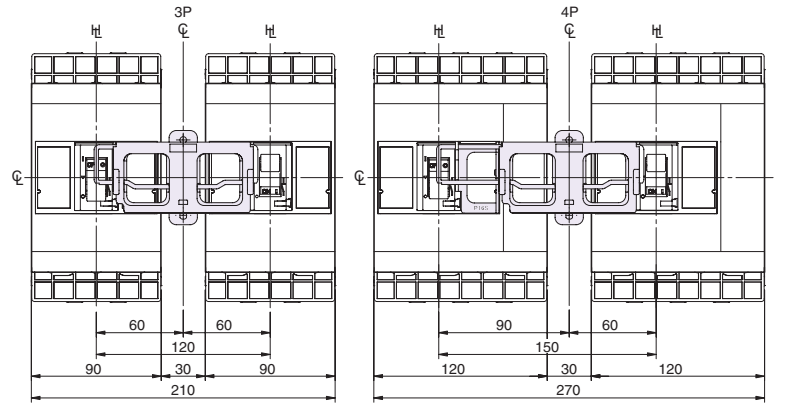

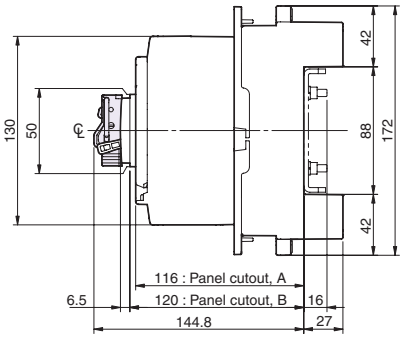

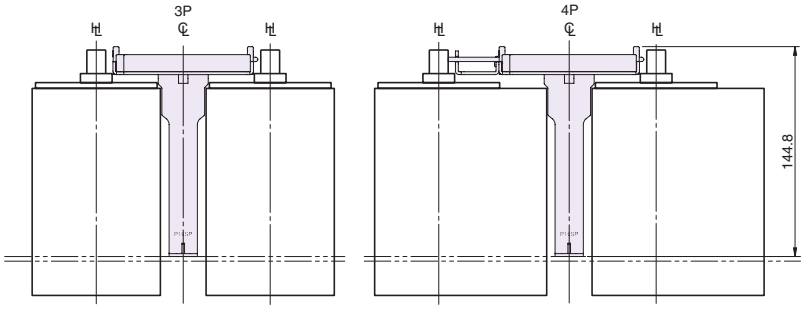

(1) Slide interlock (MS)

HL : Handle Frame Centre Line
℄ : Handle Centre Line

Dimensions, mm

Frame size (A)	Types of MCCBs	Number of poles	Breaker connection method	Interlock Order codes
50, 100, 125	**PS50-PF, PS125-NF/PF/NN, PS125-NE/PE**	3	PMC	TPMS163SC

Notes:
1: The terminal block can not be fitted to the right-hand side of the left breaker and to the left-hand side of the right breaker.
2: UVT with time-delay cannot be fitted to the left circuit breaker.
3: For high-performance electronic smart circuit breakers, the panel cutout dimensions will vary. Please contact us for details.

Panel cutout, A (front view)

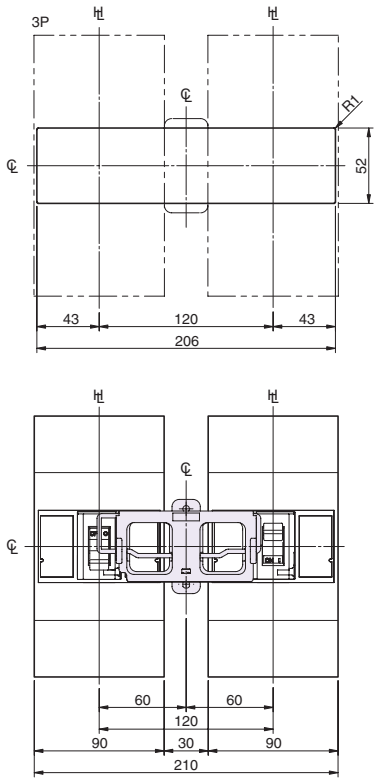

Panel cutout, B (front view)

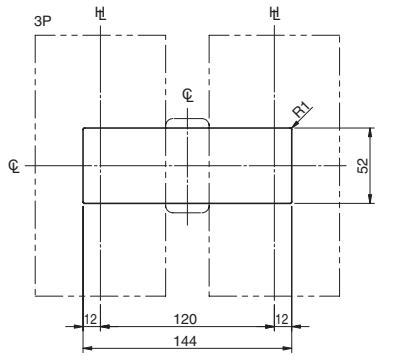

The cutout dimensions allow for a side clearance of 1.0mm from the bank of the breaker.

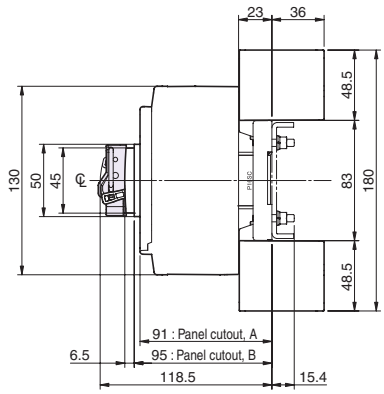

Drilling plan (front view)

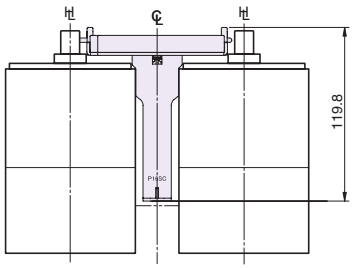

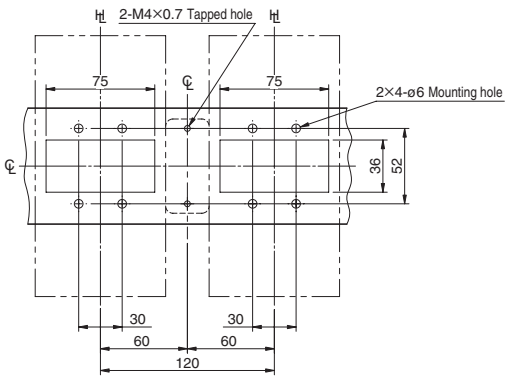

HL : Handle Frame Centre Line
℄ : Handle Centre Line

Dimensions, mm

Frame size (A)	Types of MCCBs	Types of ELCBs	Number of poles	Breaker connection method	Interlock Order codes
100, 125	**S100-GF, S125-GF, ZAS50-GF, ZAS100-GF, ZAS125-GF**	**ZS100-GF, ZS125-GF**	3	FC, RC	T2MS123SF
			4	FC, RC	T2MS124SF

Notes:
1: The terminal block can not be fitted to the right-hand side of the left breaker and to the left-hand side of the right breaker.
2: UVT with time-delay cannot be fitted to the left circuit breaker.

Panel cutout, A (front view)

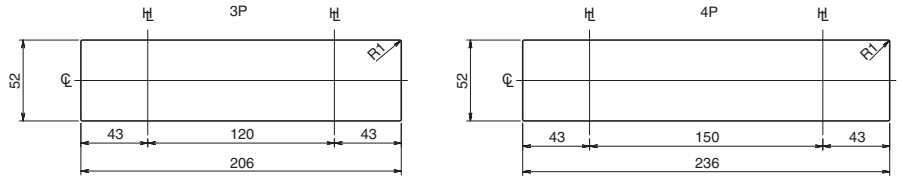

The cutout dimensions allow for a side clearance of 1.0mm from the bank of the breaker.

Panel cutout, B (front view)

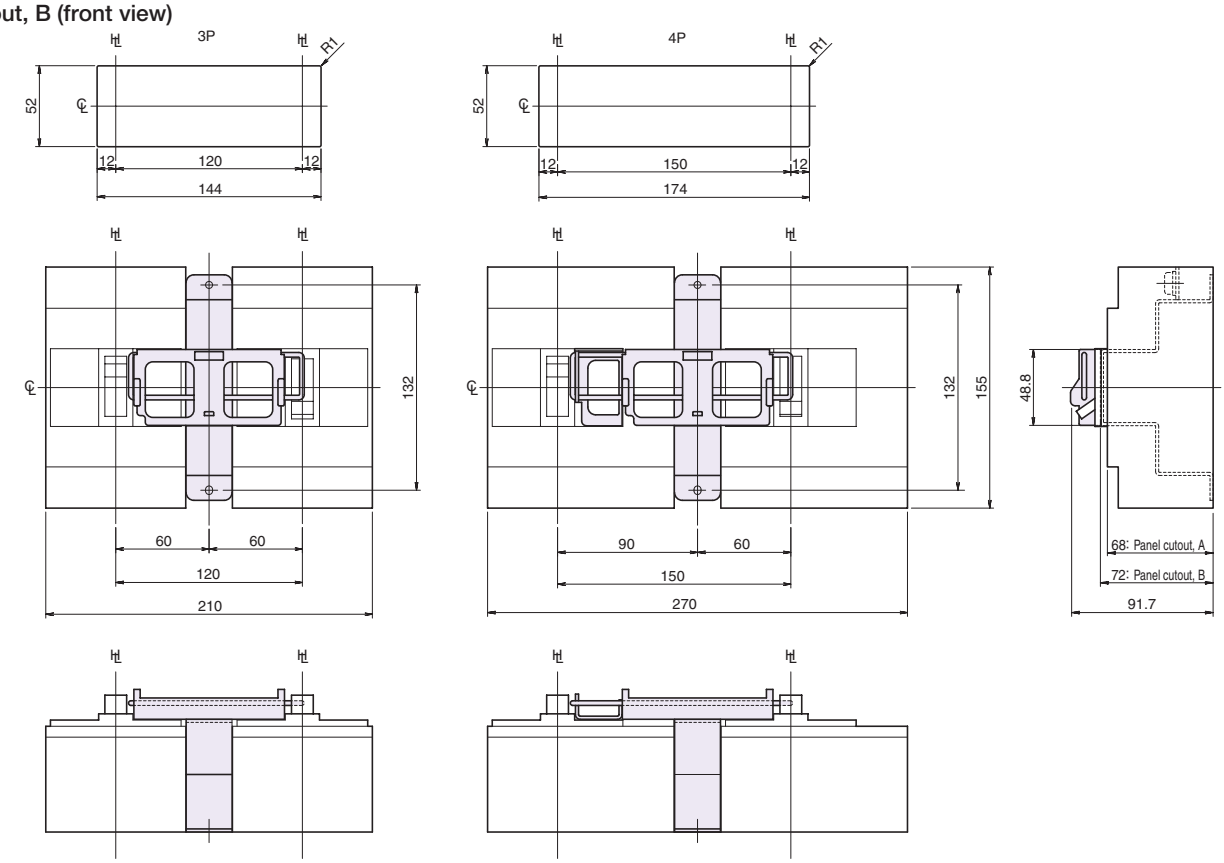

Drilling plan (front view)

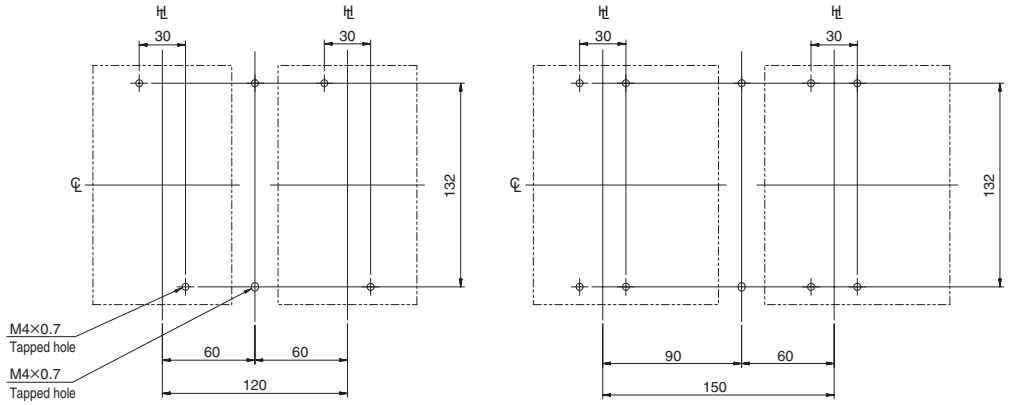

(1) Slide interlock (MS)

HL : Handle Frame Centre Line
℄ : Handle Centre Line

Dimensions, mm

Frame size (A)	Types of MCCBs	Number of poles	Breaker connection method	Interlock Order codes
100, 125	**S100-GF, S125-GF**	3	PMB	T2MS123SP
		4	PMB	T2MS124SP

Notes:
1: The terminal block can not be fitted to the right-hand side of the left breaker and to the left-hand side of the right breaker.
2: UVT with time-delay cannot be fitted to the left circuit breaker.

Panel cutout, A (front view)

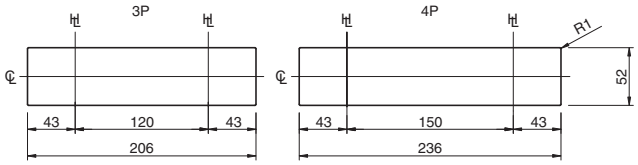

The cutout dimensions allow for a side clearance of 1.0mm from the bank of the breaker.

Panel cutout, B (front view)

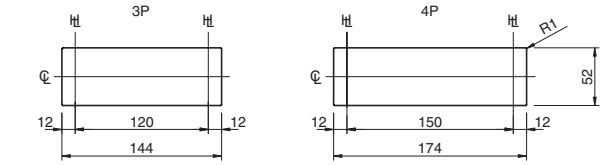

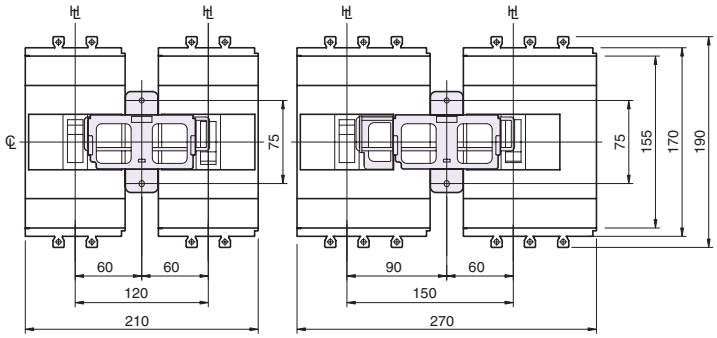

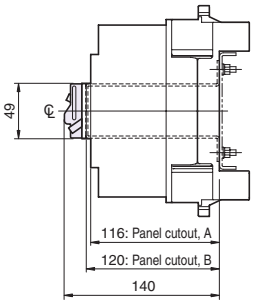

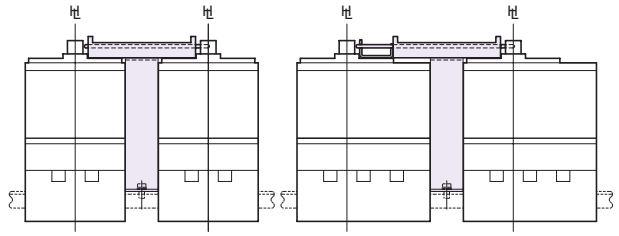

Drilling plan (front view)

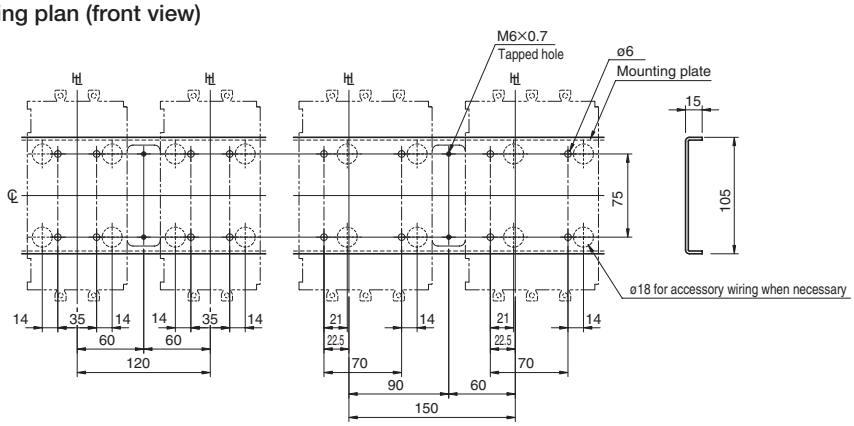

HL : Handle Frame Centre Line
℄ : Handle Centre Line

Dimensions, mm

Frame size (A)	Types of MCCBs	Number of poles	Breaker connection method	Interlock Order codes
100, 125	**S100-GF, S125-GF**	3	PMC	T2MS123SC

Notes:
1: The terminal block can not be fitted to the right-hand side of the left breaker and to the left-hand side of the right breaker.
2: UVT with time-delay cannot be fitted to the left circuit breaker.

Panel cutout, A (front view)

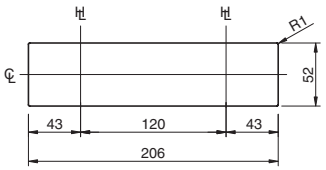

The cutout dimensions allow for a side clearance of 1.0mm from the bank of the breaker.

Panel cutout, B (front view)

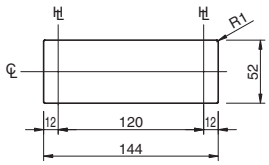

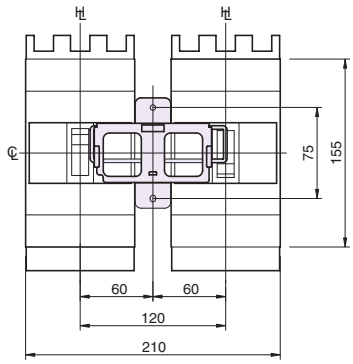

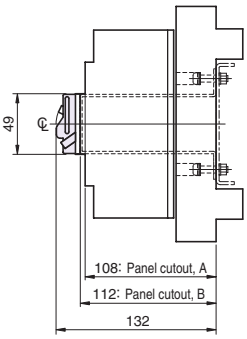

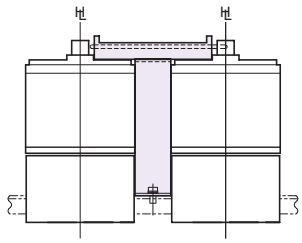

Drilling plan (front view)

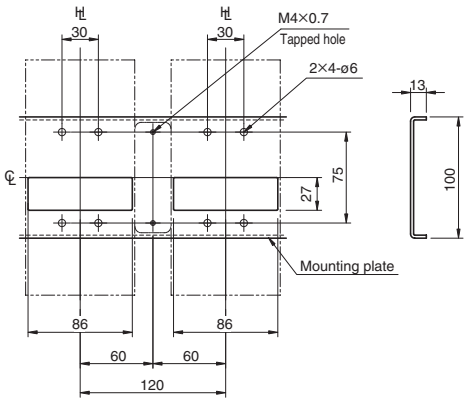

(1) Slide interlock (MS)

HL : Handle Frame Centre Line
℄ : Handle Centre Line

Dimensions, mm

Frame size (A)	Types of MCCBs	Types of ELCBs	Number of poles	Breaker connection method	Interlock Order codes
225, 250	**E250-SF, S250-SF, S250-SM, S250-SN, ZAE250-SF, ZAS250-SF, NE250-SF, NS250-SF**	**ZE250-SF, ZS250-SF, ZS250-SM, ZNE250-SF, ZNS250-SF**	3	FC, RC	T2MS25L3SF
			4	FC, RC	T2MS25L4SF

Notes:
1: If the insulation distance is insufficient due to the front-connected extension bars, be sure to insulate with insulating tape or the like.
2: The terminal block can not be fitted to the right-hand side of the left breaker and to the left-hand side of the right breaker.
3: UVT with time-delay cannot be fitted to the left circuit breaker.

Panel cutout, A (front view)

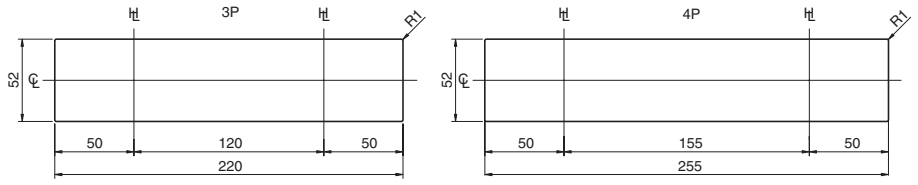

The cutout dimensions allow for a side clearance of 1.0mm from the bank of the breaker.

Panel cutout, B (front view)

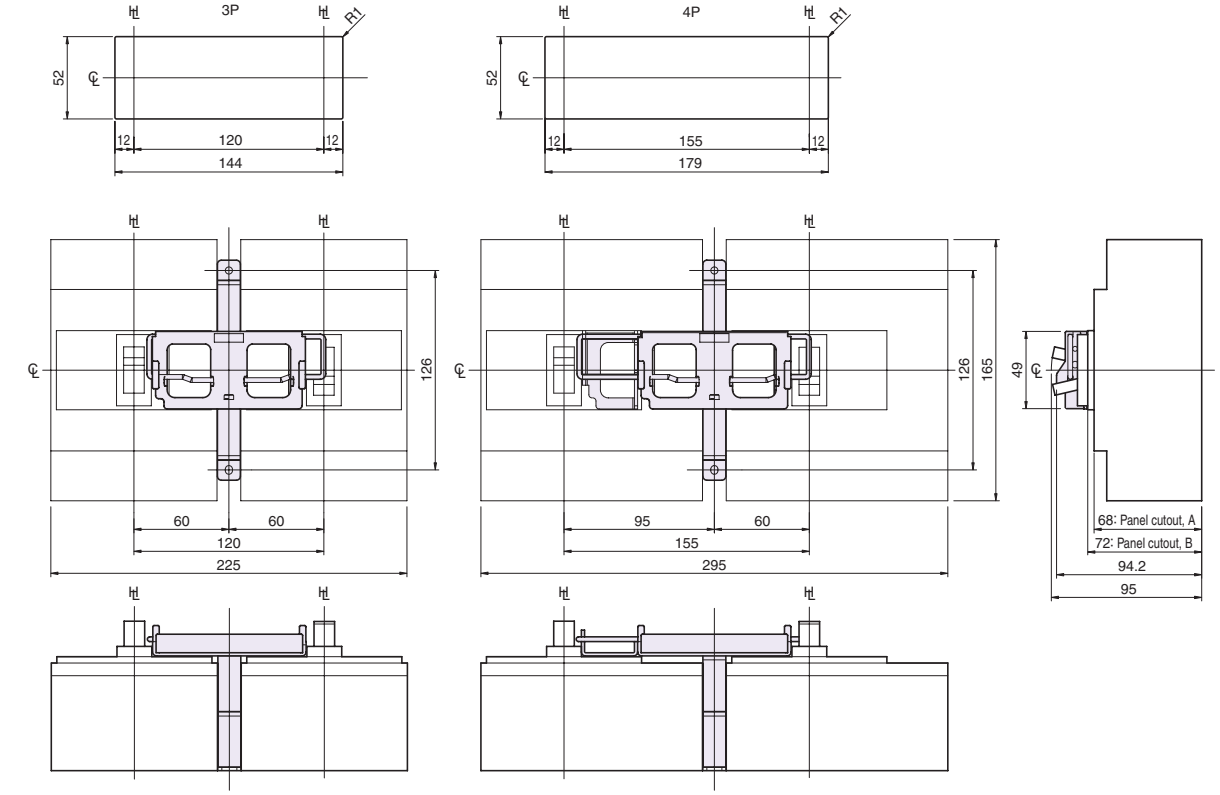

Drilling plan (front view)

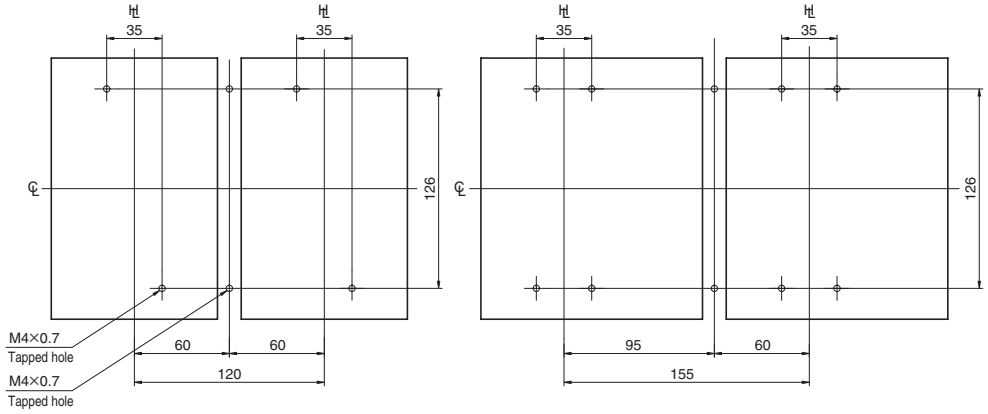

HL : Handle Frame Centre Line
℄ : Handle Centre Line

Dimensions, mm

Frame size (A)	Types of MCCBs	Number of poles	Breaker connection method	Interlock Order codes
225, 250	**E250-SF, S250-SF, S250-SN**	3	PMC	T2MS25L3SC

Notes:
1: The terminal block can not be fitted to the right-hand side of the left breaker and to the left-hand side of the right breaker.
2: UVT with time-delay cannot be fitted to the left circuit breaker.

Panel cutout, A (front view)

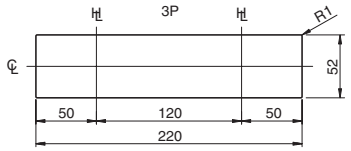

The cutout dimensions allow for a side clearance of 1.0mm from the bank of the breaker.

Panel cutout, B (front view)

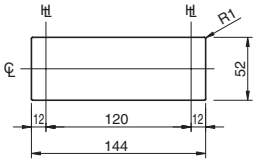

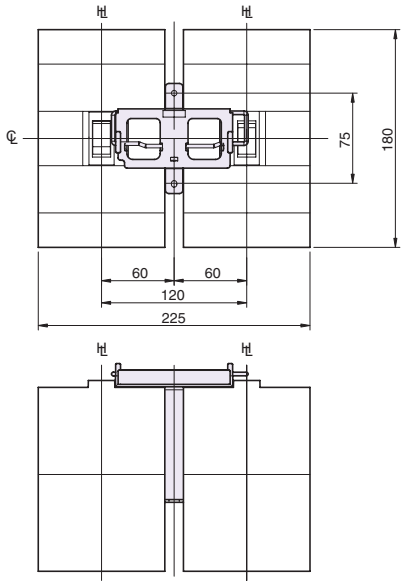

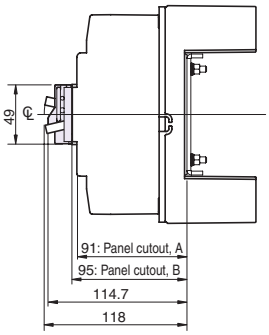

Drilling plan (front view)

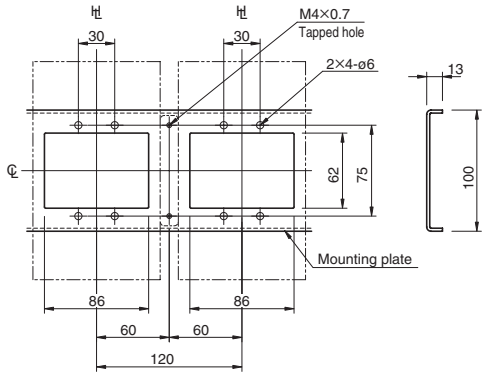

3 Externally mounted accessories

(1) Slide interlock (MS)

HL : Handle Frame Centre Line
℄ : Handle Centre Line

Dimensions, mm

Frame size (A)	Types of MCCBs	Number of poles	Breaker connection method	Interlock Order codes
225, 250	**PS250-PF/NN, PS250-NE/PE**	3	FC、RC	TPMS253SF
		4	FC、RC	TPMS254SF

Notes:
1: The terminal block can not be fitted to the right-hand side of the left breaker and to the left-hand side of the right breaker.
2: UVT with time-delay cannot be fitted to the left circuit breaker.
3: For high-performance electronic smart circuit breakers, the panel cutout dimensions will vary. Please contact us for details.

The cutout dimensions allow for a side clearance of 1.0mm from the bank of the breaker.

Panel cutout, A (front view)

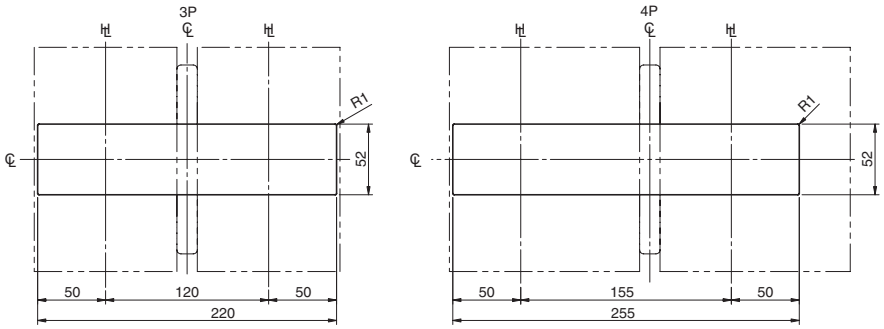

Drilling plan (front view)

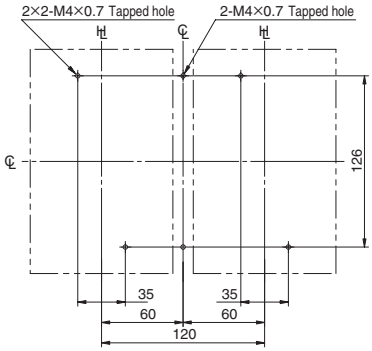

Panel cutout, B (front view)

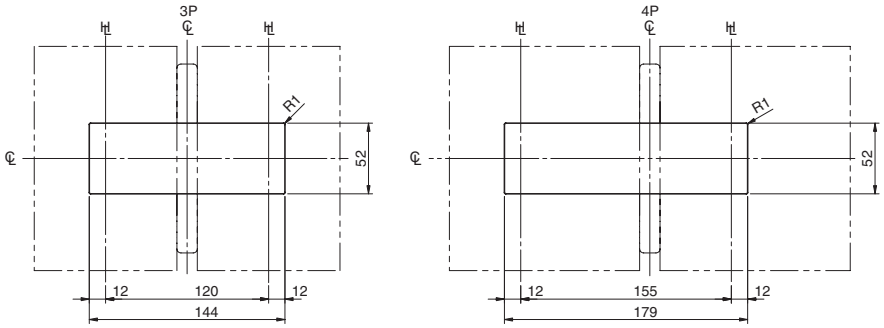

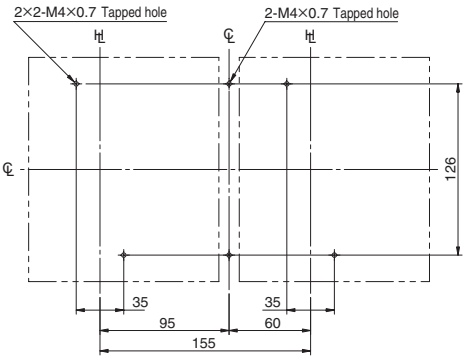

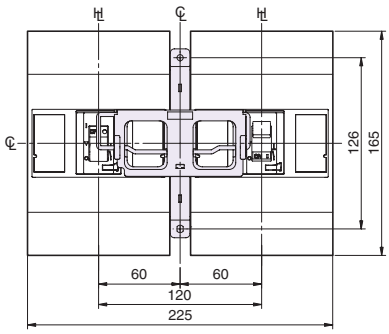

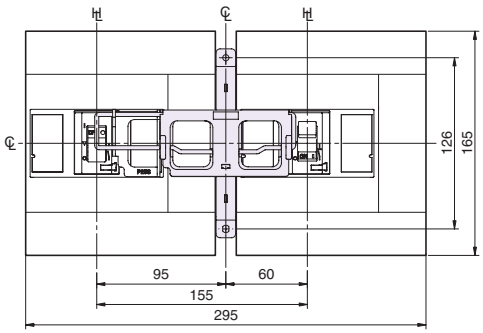

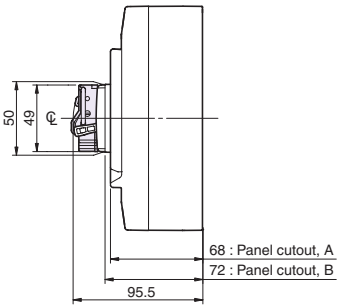

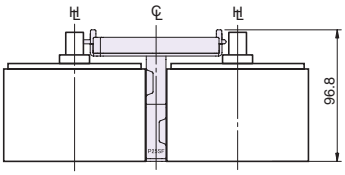

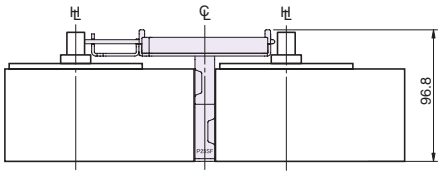

HL : Handle Frame Centre Line
℄ : Handle Centre Line

Dimensions, mm

Frame size (A)	Types of MCCBs	Number of poles	Breaker connection method	Interlock Order codes
225, 250	**PS250-PF/NN, PS250-NE/PE**	3	PMB	TPMS253SP
		4	PMB	TPMS254SP

Notes:

1: The terminal block can not be fitted to the right-hand side of the left breaker and to the left-hand side of the right breaker.

2: UVT with time-delay cannot be fitted to the left circuit breaker.

3: For high-performance electronic smart circuit breakers, the panel cutout dimensions will vary. Please contact us for details.

Panel cutout, A (front view)

The cutout dimensions allow for a side clearance of 1.0mm from the bank of the breaker.

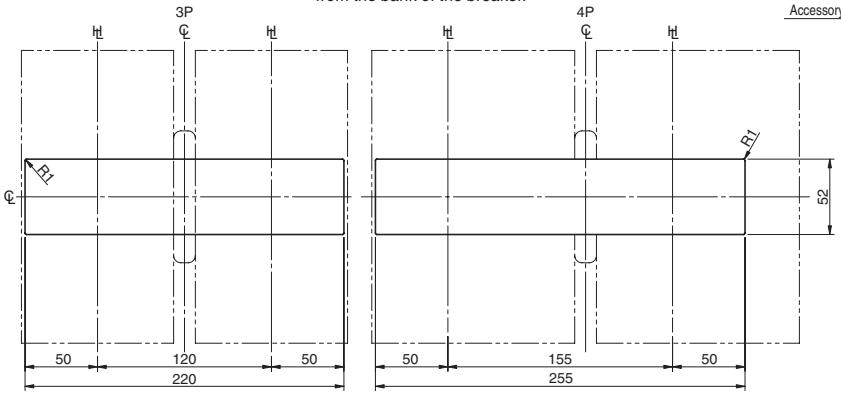

Drilling plan (front view)

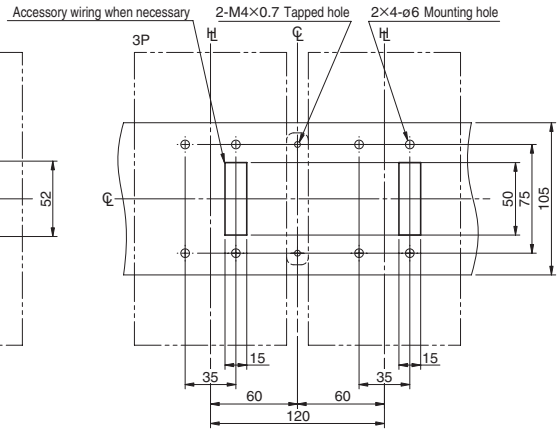

Panel cutout, B (front view)

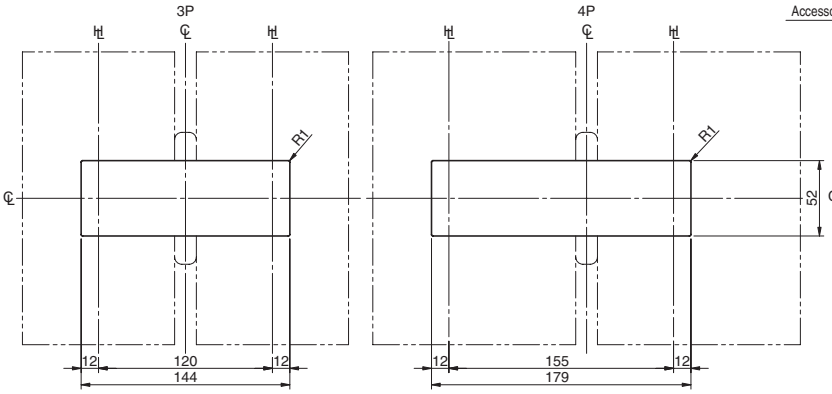

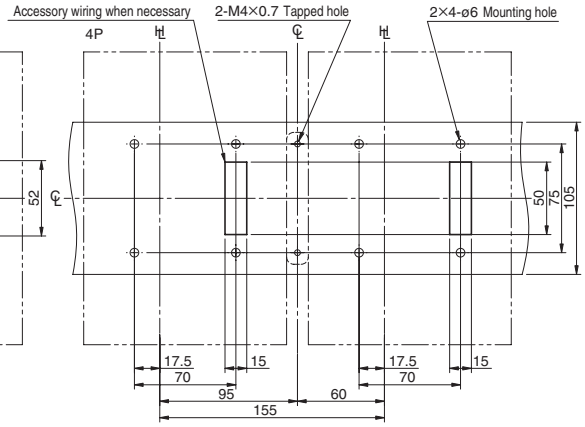

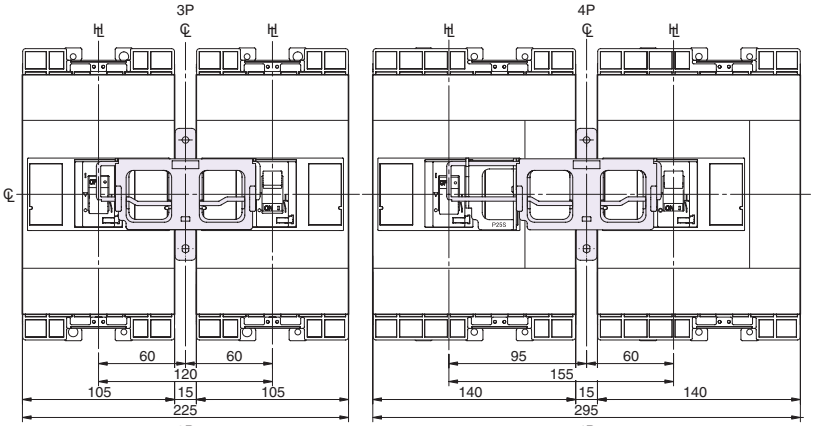

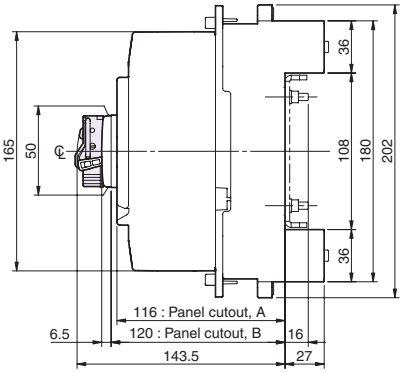

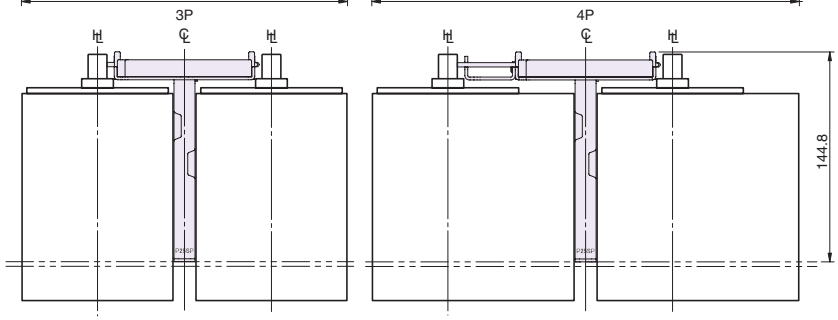

(1) Slide interlock (MS)

HL : Handle Frame Centre Line
℄ : Handle Centre Line

Dimensions, mm

Frame size (A)	Types of MCCBs	Number of poles	Breaker connection method	Interlock Order codes
225, 250	**PS250-PF/NN, PS250-NE/PE**	3	PMC	TPMS253SC

Notes:
1: The terminal block can not be fitted to the right-hand side of the left breaker and to the left-hand side of the right breaker.
2: UVT with time-delay cannot be fitted to the left circuit breaker.
3: For high-performance electronic smart circuit breakers, the panel cutout dimensions will vary. Please contact us for details.

Panel cutout, A (front view)

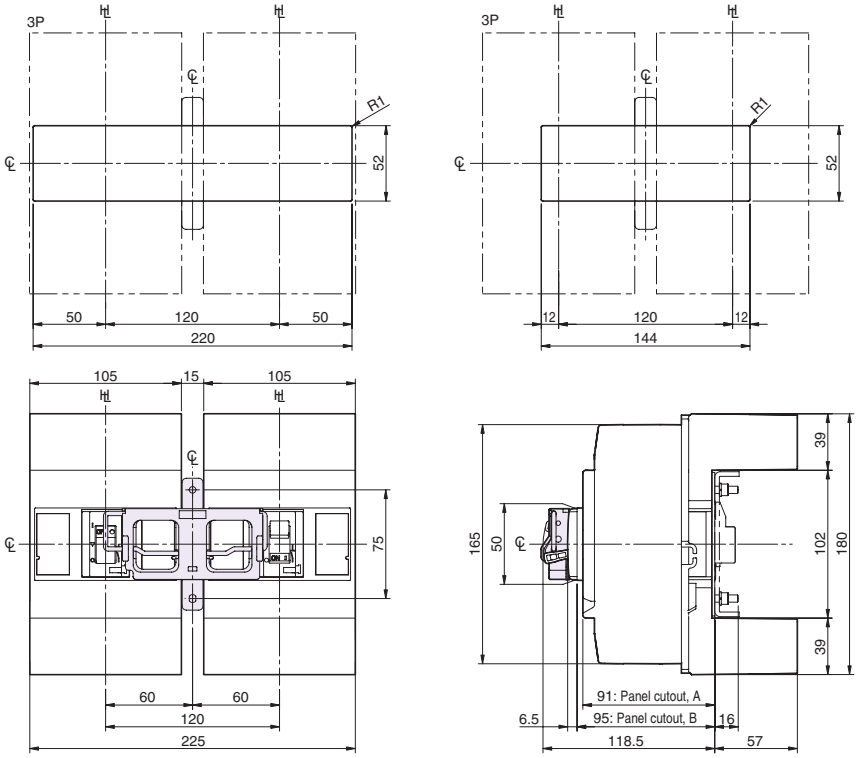

Panel cutout, B (front view)

The cutout dimensions allow for a side clearance of 1.0mm from the bank of the breaker.

Drilling plan (front view)

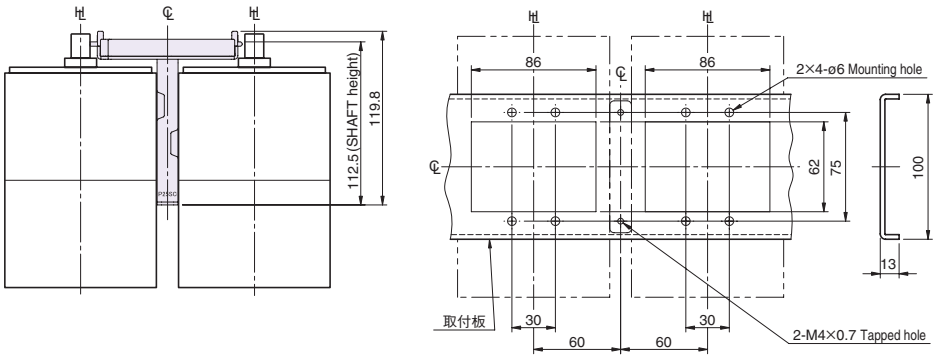

HL : Handle Frame Centre Line
℄ : Handle Centre Line

Dimensions, mm

Frame size (A)	Types of MCCBs	Types of ELCBs	Number of poles	Breaker connection method	Interlock Order codes	Panel cutout, A (mm)	Panel cutout, B (mm)	C (mm)
100 125	**H100-NF, H125-NF, L100-NF, L125-NF**		3	FC, RC	T2MS253LF	103	107	126.7
			4	FC, RC	T2MS254LF			
225 250	**ZAS225-GF, ZAS250-GF**	**ZS225-GF, ZS250-GF**	3	FC, RC	T2MS253SF	68	72	91.7
			4	FC, RC	T2MS254SF			
	H225-NF/NE, H250-NF, L225-NF, L250-NF		3	FC, RC	T2MS253LF	103	107	126.7
			4	FC, RC	T2MS254LF			

Notes:

1: If the insulation distance is insufficient due to the front-connected extension bars, be sure to insulate with insulating tape or the like.
2: The terminal block can not be fitted to the right-hand side of the left breaker and to the left-hand side of the right breaker.
3: UVT with time-delay cannot be fitted to the left circuit breaker.

Panel cutout, A (front view)

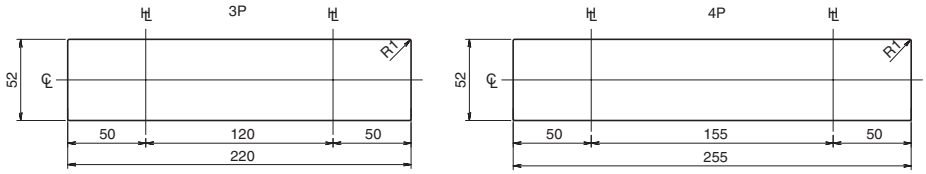

The cutout dimensions allow for a side clearance of 1.0mm from the bank of the breaker.

Panel cutout, B (front view)

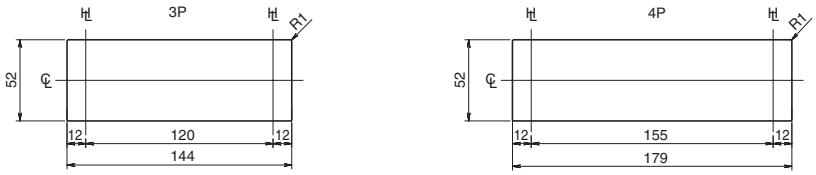

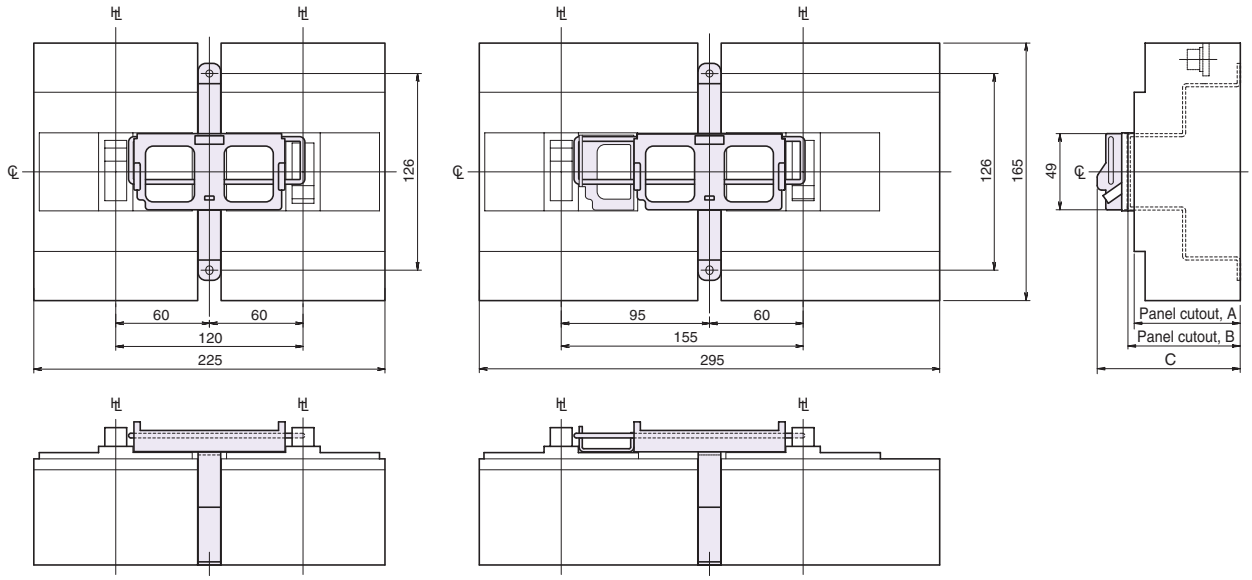

Drilling plan (front view)

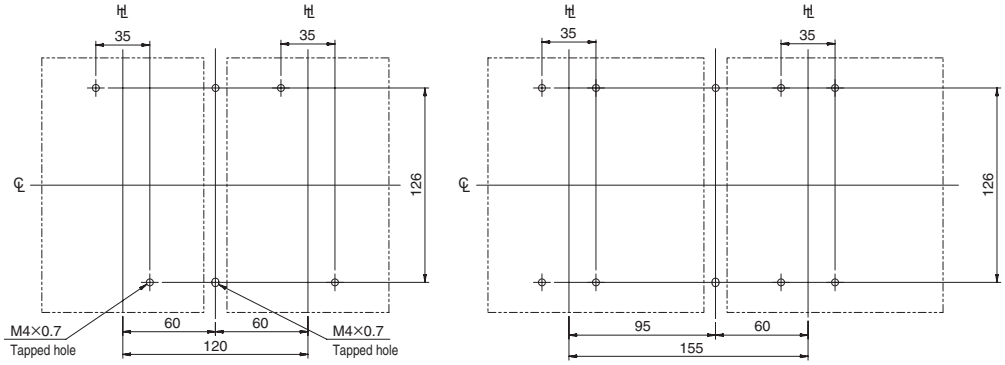

(1) Slide interlock (MS)

HL : Handle Frame Centre Line
℄ : Handle Centre Line

Dimensions, mm

Frame size (A)	Types of MCCBs	Number of poles	Breaker connection method	Interlock Order codes
100, 125	**H100-NF, L100-NF H125-NF, L125-NF**	3	PMB	T2MS253LP
		4	PMB	T2MS254LP
225	**H225-NF, L225-NF**	3	PMB	T2MS253LP
		4	PMB	T2MS254LP

Notes:
1: The terminal block can not be fitted to the right-hand side of the left breaker and to the left-hand side of the right breaker.
2: UVT with time-delay cannot be fitted to the left circuit breaker.

Panel cutout, A (front view)

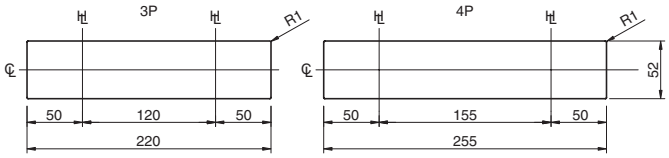

The cutout dimensions allow for a side clearance of 1.0mm from the bank of the breaker.

Panel cutout, B (front view)

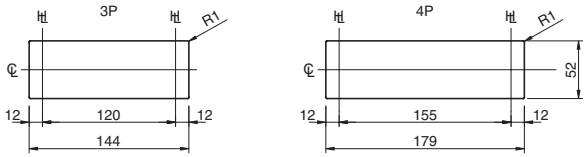

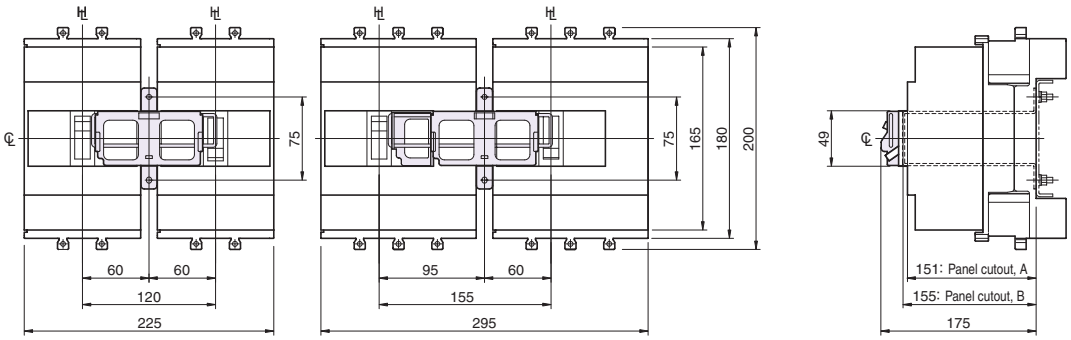

Drilling plan (front view)

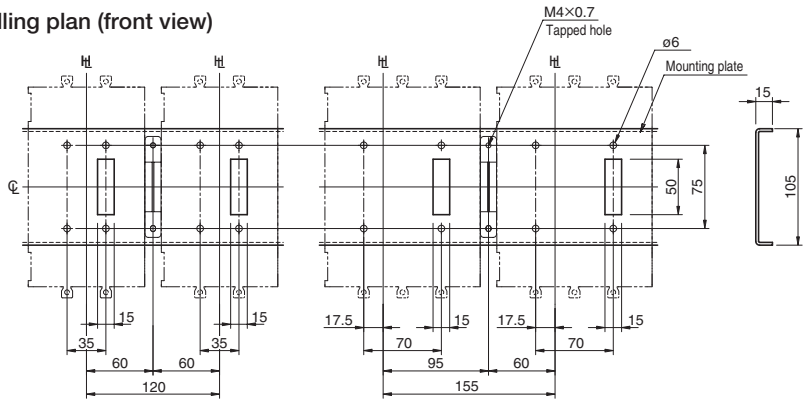

HL : Handle Frame Centre Line
℄ : Handle Centre Line

Dimensions, mm

Frame size (A)	Types of MCCBs	Number of poles	Breaker connection method	Interlock Order codes
100, 125	**H100-NF, L100-NF** **H125-NF, L125-NF**	3	PMC	T2MS253LC
225	**H225-NF, L225-NF**	3	PMC	T2MS253LC

Notes:

1: The terminal block can not be fitted to the right-hand side of the left breaker and to the left-hand side of the right breaker.

2: UVT with time-delay cannot be fitted to the left circuit breaker.

Panel cutout, A (front view)

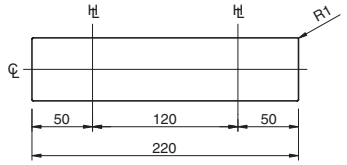

The cutout dimensions allow for a side clearance of 1.0mm from the bank of the breaker.

Panel cutout, B (front view)

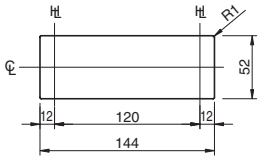

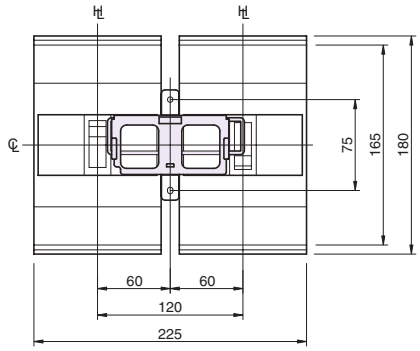

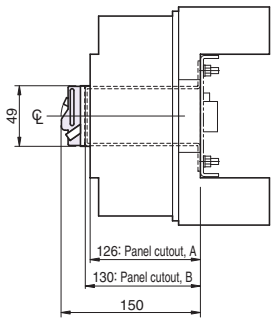

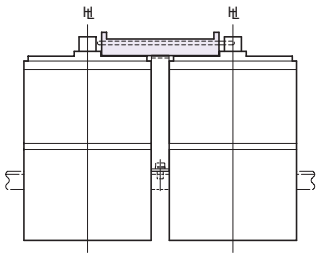

Drilling plan (front view)

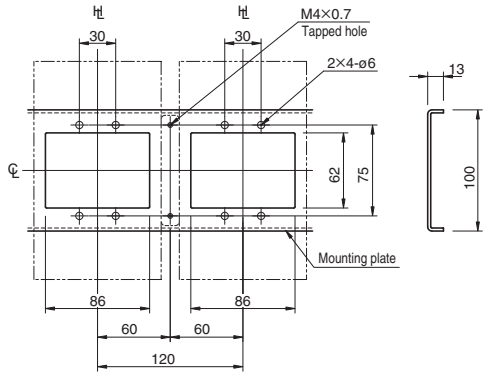

3 Externally mounted accessories

(1) Slide interlock (MS)

HL : Handle Frame Centre Line
℄ : Handle Centre Line

Dimensions, mm

Frame size (A)	Types of MCCBs	Number of poles	Breaker connection method	Interlock Order codes
400	**PS400-CF/NF/GF/NN, PS400-NE/GE, PH400-CF, PH400-CE**	3	FC、RC	TPMS633SF
		4	FC、RC	TPMS634SF
600, 630	**PS630-CF/NF/GF/NN, PS630-NE/GE, PH630-CF, PH630-CE**	3	FC、RC	TPMS633SF
		4	FC、RC	TPMS634SF

Notes:
1: The terminal block can not be fitted to the right-hand side of the left breaker and to the left-hand side of the right breaker.
2: UVT with time-delay cannot be fitted to the left circuit breaker.
3: For high-performance electronic smart circuit breakers, the panel cutout dimensions will vary. Please contact us for details.

Panel cutout, A (front view)

The cutout dimensions allow for a side clearance of 1.0mm from the bank of the breaker.

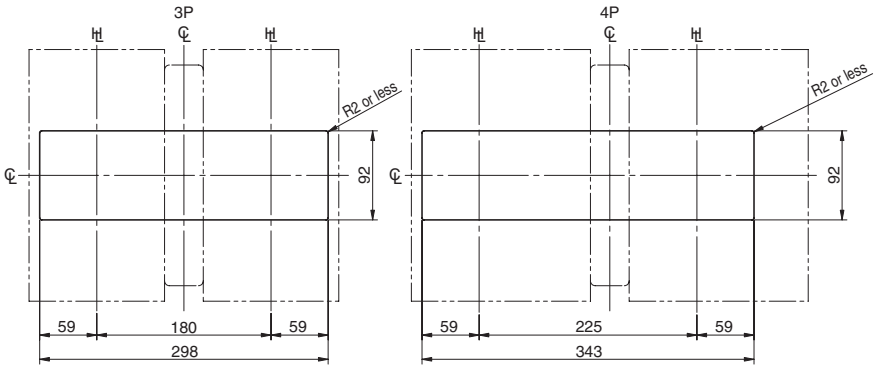

Drilling plan (front view)

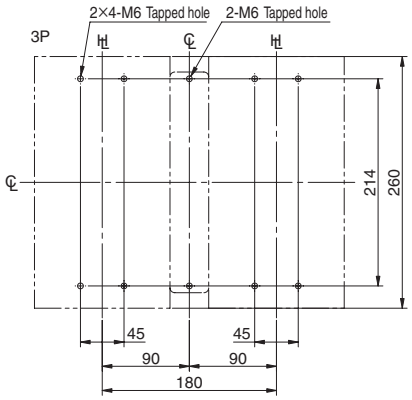

Panel cutout, B (front view)

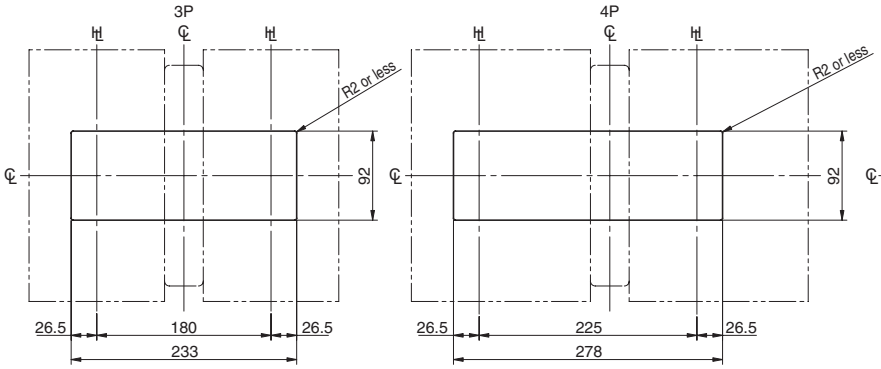

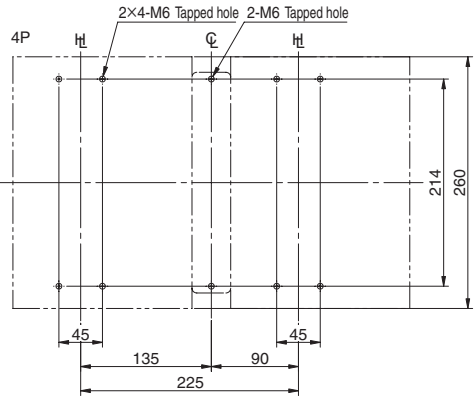

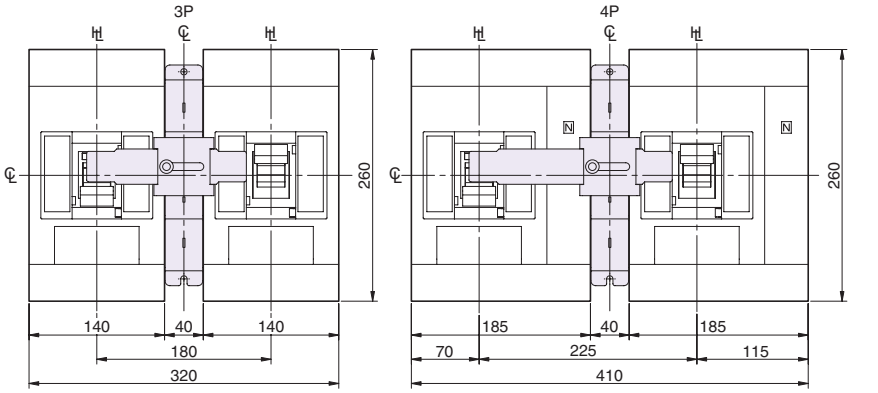

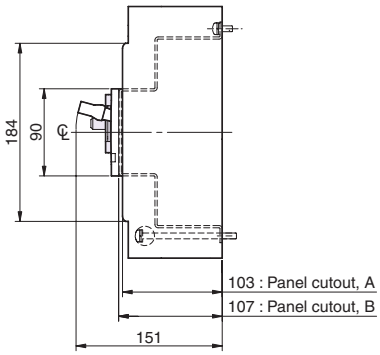

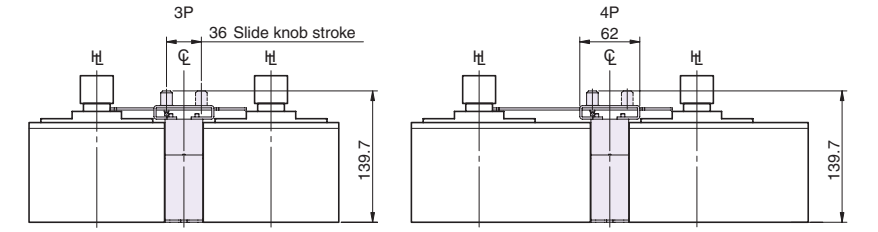

HL : Handle Frame Centre Line
℄ : Handle Centre Line

Dimensions, mm

Frame size (A)	Types of MCCBs	Number of poles	Breaker connection method	Interlock Order codes
400	**PS400-CF/NF/GF/NN, PS400-NE/GE, PH400-CF, PH400-CE**	3	PMB	TPMS633SP
		4	PMB	TPMS634SP
600, 630	**PS630-CF/NF/GF/NN, PS630-NE/GE, PH630-CF, PH630-CE**	3	PMB	TPMS633SP
		4	PMB	TPMS634SP

Notes:

1: The terminal block can not be fitted to the right-hand side of the left breaker and to the left-hand side of the right breaker.

2: UVT with time-delay cannot be fitted to the left circuit breaker.

3: For high-performance electronic smart circuit breakers, the panel cutout dimensions will vary. Please contact us for details.

Panel cutout, A (front view)

The cutout dimensions allow for a side clearance of 1.0mm from the bank of the breaker.

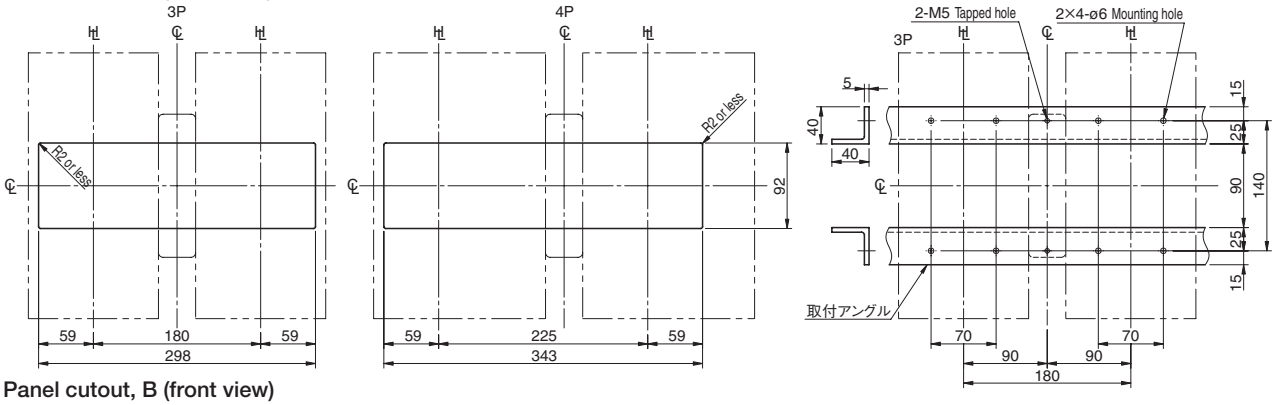

Panel cutout, B (front view)

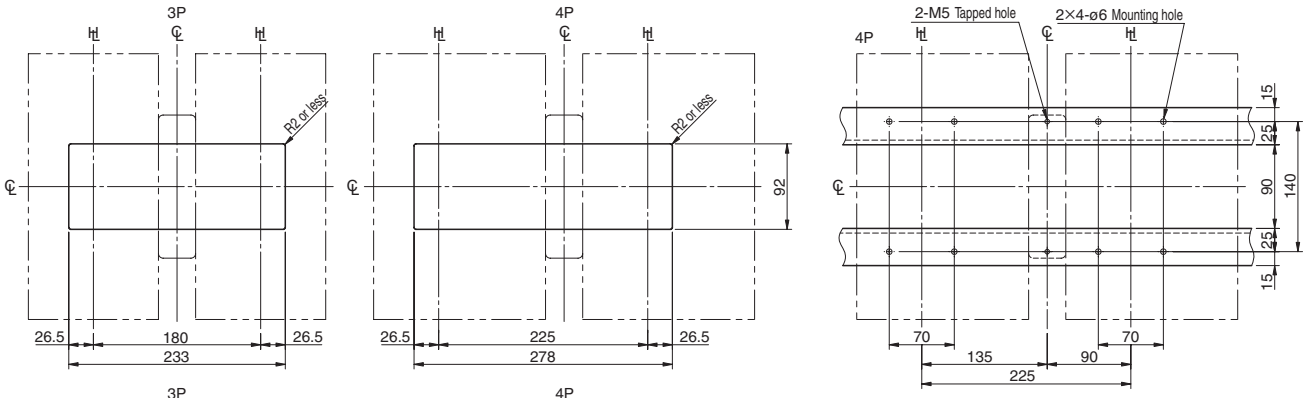

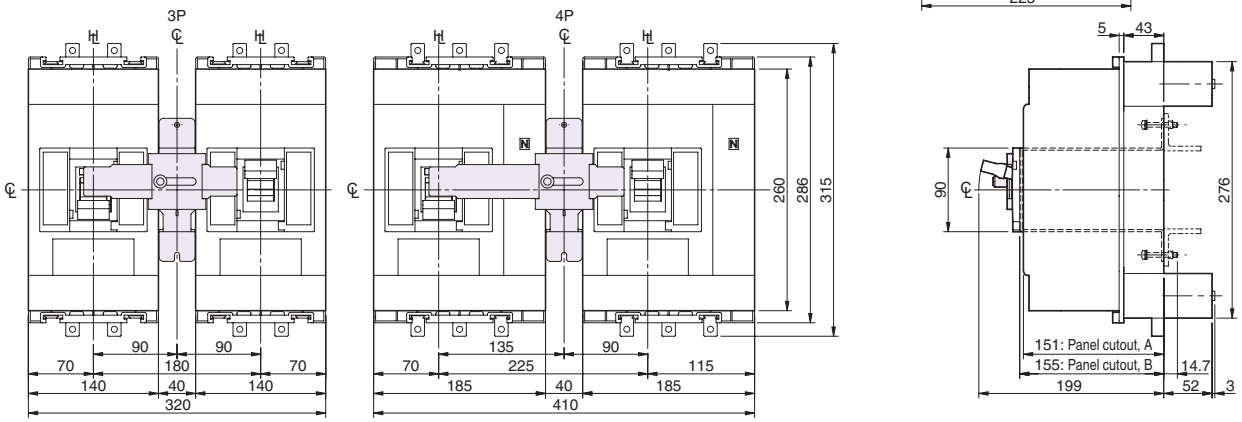

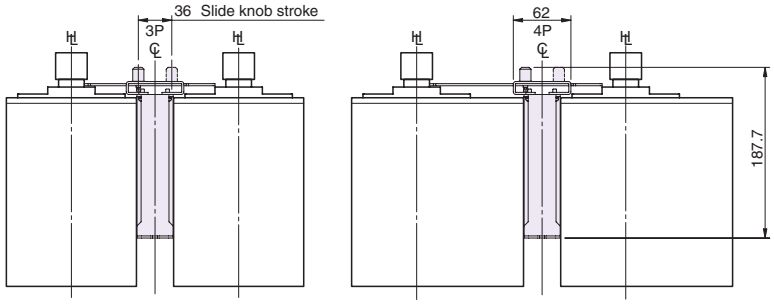

6

Accessories

3 Externally mounted accessories

(1) Slide interlock (MS)

HL : Handle Frame Centre Line
℄ : Handle Centre Line

Dimensions, mm

Frame size (A)	Types of MCCBs	Number of poles	Breaker connection method	Interlock Order codes
400	**PS400-CF/NF/GF/NN, PS400-NE/GE, PH400-CF, PH400-CE**	3	PMC	TPMS633SC
600, 630	**PS630-CF/NF/GF/NN, PS630-NE/GE, PH630-CF, PH630-CE**	3	PMC	TPMS633SC

Notes:
1: The terminal block can not be fitted to the right-hand side of the left breaker and to the left-hand side of the right breaker.
2: UVT with time-delay cannot be fitted to the left circuit breaker.
3: For high-performance electronic smart circuit breakers, the panel cutout dimensions will vary. Please contact us for details.

Panel cutout, A (front view)

The cutout dimensions allow for a side clearance of 1.0mm from the bank of the breaker.

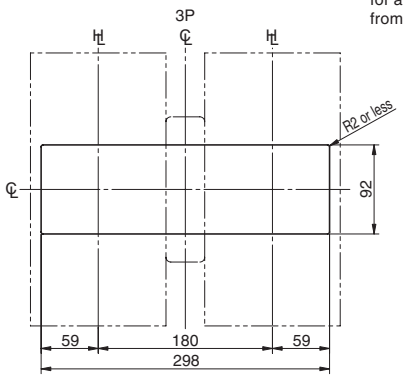

Drilling plan (front view)

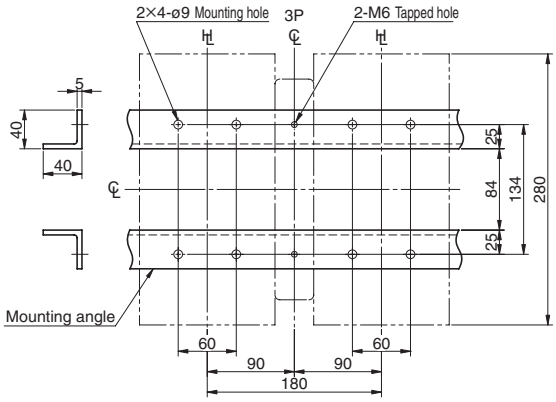

Panel cutout, B (front view)

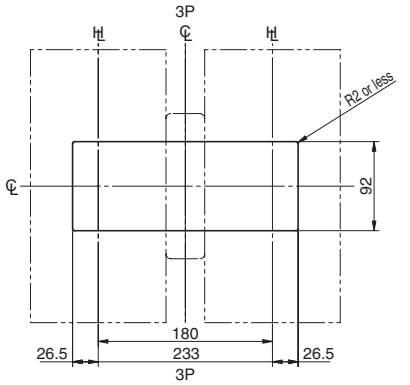

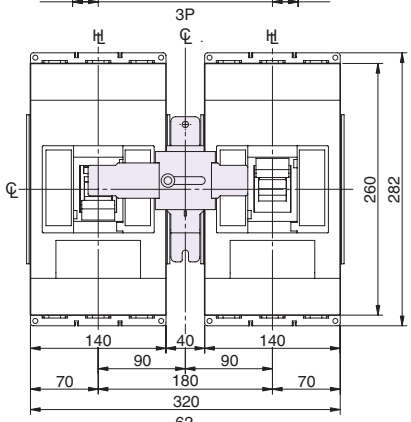

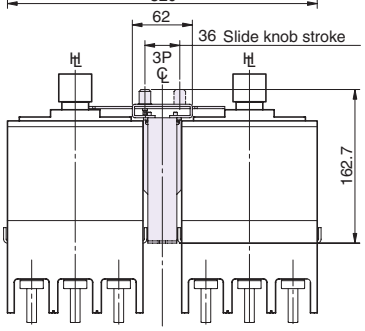

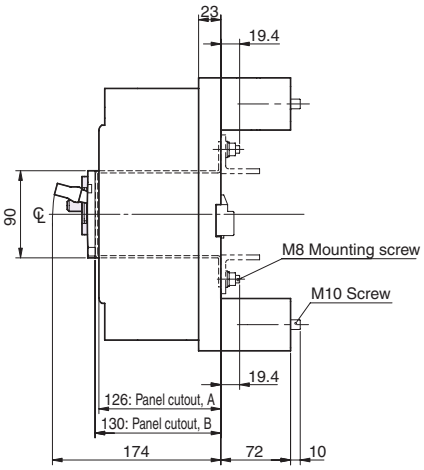

HL : Handle Frame Centre Line
℄ : Handle Centre Line

Dimensions, mm

Frame size (A)	Types of MCCBs	Types of ELCBs	Number of poles	Breaker connection method	Interlock Order codes	Panel cutout, A (mm)	Panel cutout, B (mm)	C (mm)
400	**E400-NF, ZAE400-NF, ZAS400-NF/GF, NE400-NF, NS400-NF**	**ZE400-NF, ZS400-NF/GF, ZNE400-NF, ZNS400-NF**	3	FC, RC	T2MS403SF	103	107	135.5
			4	FC, RC	T2MS404SF			
	H400-NE, L400-NE		3	FC, RC	T2MS403LF	140	144	172.5
			4	FC, RC	T2MS404LF			

Notes:
1: If the insulation distance is insufficient due to the front-connected extension bars, be sure to insulate with insulating tape or the like.
2: The terminal block can not be fitted to the right-hand side of the left breaker and to the left-hand side of the right breaker.
3: UVT with time-delay cannot be fitted to the left circuit breaker.
4: Wide terminal covers can not be fitted to interfere with each other. Straight terminal covers can be fitted.
5: For high-performance electronic smart circuit breakers, the panel cutout dimensions will vary. Please contact us for details.

Panel cutout, A (front view)

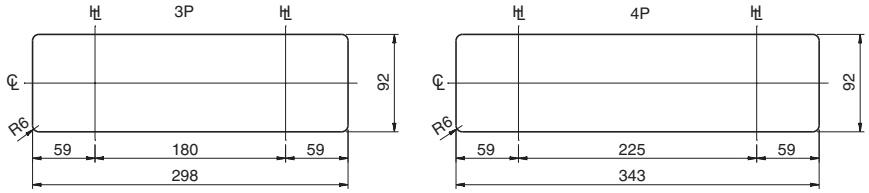

The cutout dimensions allow for a side clearance of 1.0mm from the bank of the breaker.

Panel cutout, B (front view)

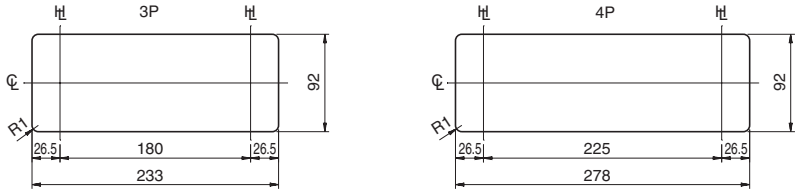

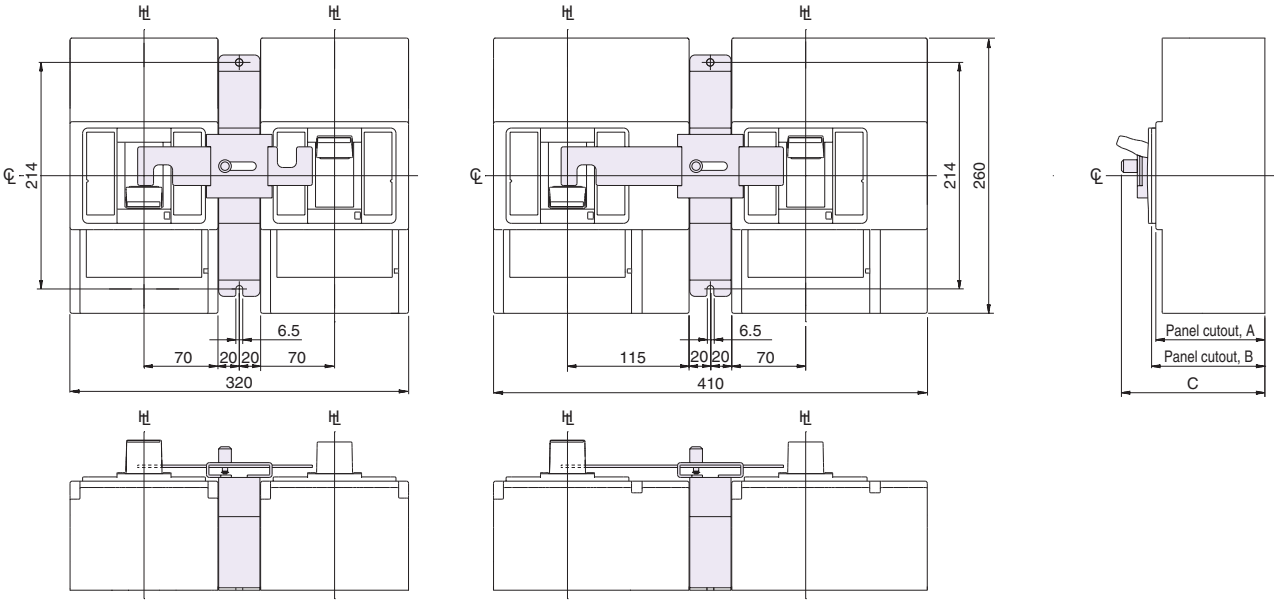

Drilling plan (front view)

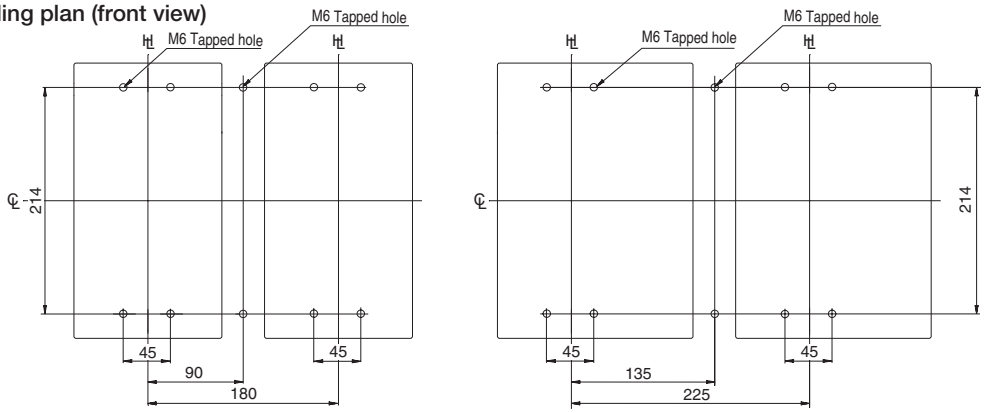

3 Externally mounted accessories

(1) Slide interlock (MS)

HL : Handle Frame Centre Line
℄ : Handle Centre Line

Dimensions, mm

Frame size (A)	Types of MCCBs	Number of poles	Breaker connection method	Interlock Order codes
400	**H400-NE, L400-NE**	3	PMB	T2MS403LP
		4	PMB	T2MS404LP

Notes:
1: The terminal block can not be fitted to the right-hand side of the left breaker and to the left-hand side of the right breaker.
2: UVT with time-delay cannot be fitted to the left circuit breaker.
3: Wide terminal covers can not be fitted to interfere with each other. Straight terminal covers can be fitted.
4: For high-performance electronic smart circuit breakers, the panel cutout dimensions will vary. Please contact us for details.

Panel cutout, A (front view)

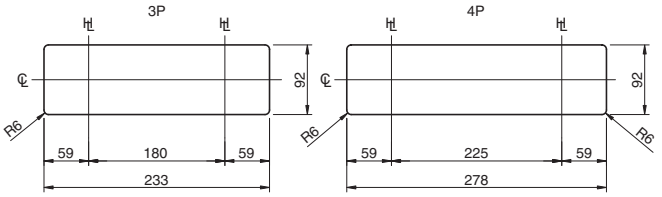

The cutout dimensions allow for a side clearance of 1.0mm from the bank of the breaker.

Panel cutout, B (front view)

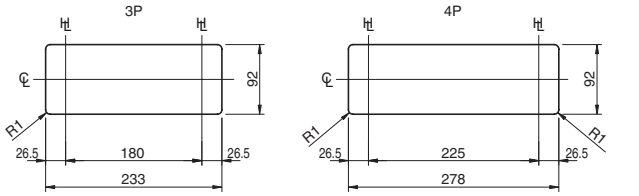

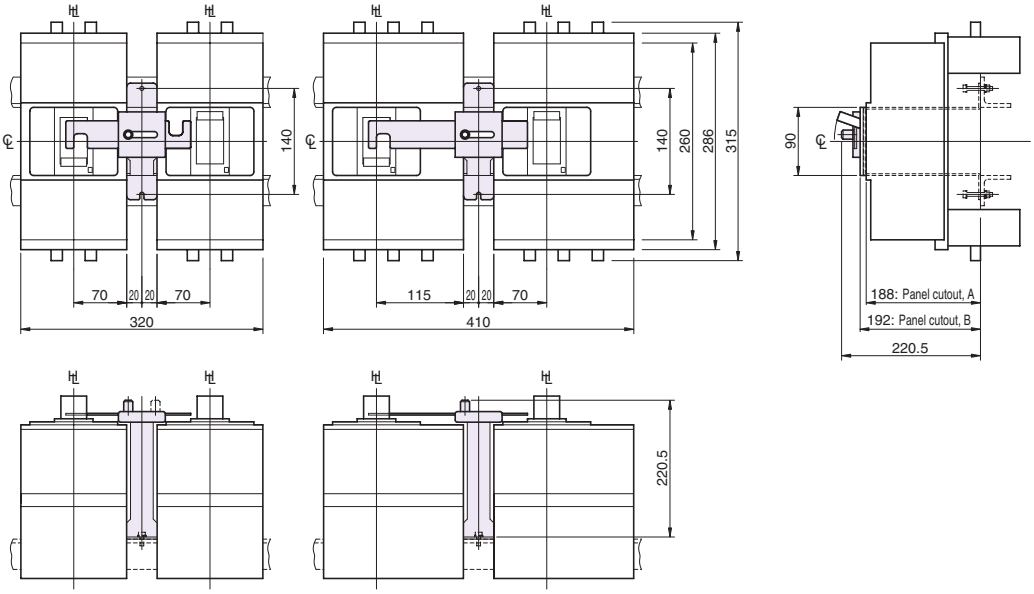

Drilling plan (front view)

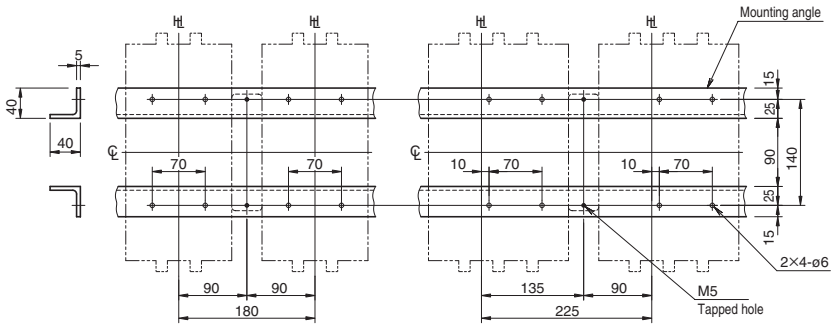

HL : Handle Frame Centre Line
℄ : Handle Centre Line

Dimensions, mm

Frame size (A)	Types of MCCBs	Number of poles	Breaker connection method	Interlock Order codes
400	**H400-NE, L400-NE**	3	PMC	T2MS403LC

Notes:

1: The terminal block can not be fitted to the right-hand side of the left breaker and to the left-hand side of the right breaker.
2: UVT with time-delay cannot be fitted to the left circuit breaker.
3: Wide terminal covers can not be fitted to interfere with each other. Straight terminal covers can be fitted.
4: For high-performance electronic smart circuit breakers, the panel cutout dimensions will vary. Please contact us for details.

Panel cutout, A (front view)

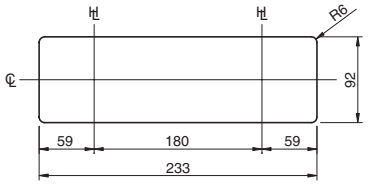

The cutout dimensions allow for a side clearance of 1.0mm from the bank of the breaker.

Panel cutout, B (front view)

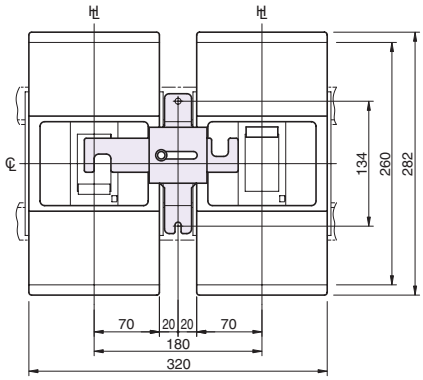

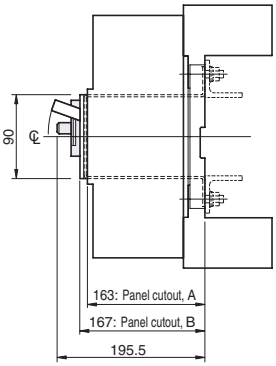

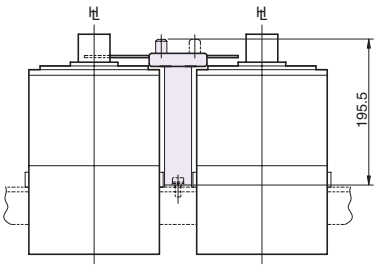

Drilling plan (front view)

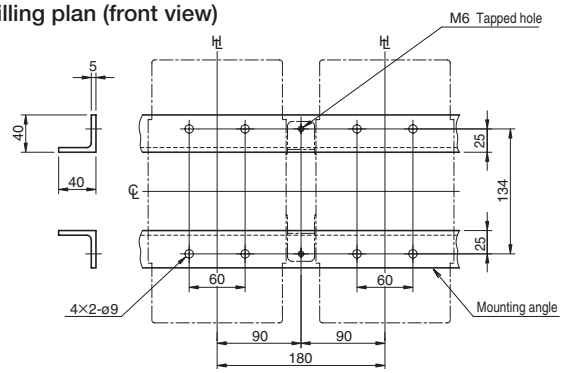

(1) Slide interlock (MS)

Dimensions, mm

Frame size (A)	Types of MCCBs	Types of ELCBs	Number of poles	Breaker connection method	Interlock Order codes	Panel cutout, A (mm)	Panel cutout, B (mm)	C (mm)
600, 630, 800, 1000	**S630-CF/NF/NE/GN, S800-CF/NF/NE/RF/RE/PF/PE/NN, ZAS630-CF/NF, ZAS800-CF/NF, NS630-NF, NS800-NF, S1000-CE/NN**	**ZS630-CF/NF, ZS800-CF/NF**	3	FC, RC	T2MS803SF	103	107	135.5
			4	FC, RC	T2MS804SF			
	H630-NE, H800-NE, L630-NE, L800-NE	—	3	FC, RC	T2MS803LF	140	144	172.5
			4	FC, RC	T2MS804LF			

Notes:
1: The terminal block can not be fitted to the right-hand side of the left breaker and to the left-hand side of the right breaker.
2: UVT with time-delay cannot be fitted to the left circuit breaker.
3: For high-performance electronic smart circuit breakers, the panel cutout dimensions will vary. Please contact us for details.

ASL : Arrangement Standard Line
HL : Handle Frame Centre Line

Panel cutout, A (front view)

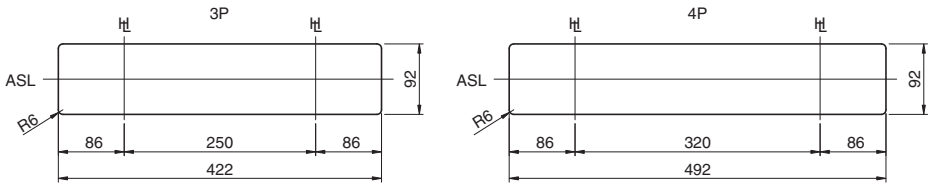

Panel cutout, B (front view)

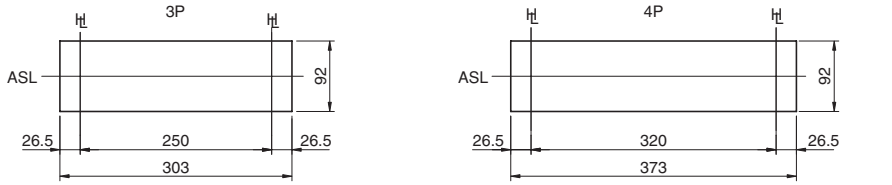

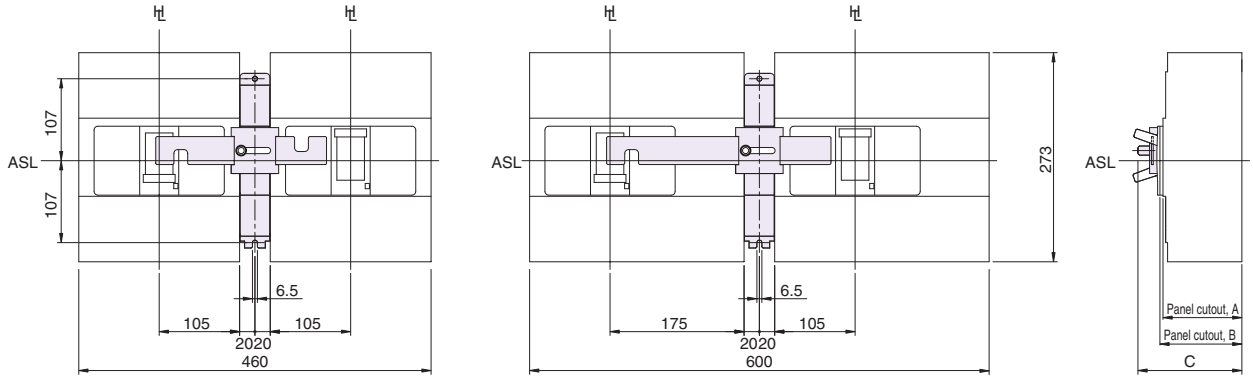

Drilling plan (front view)

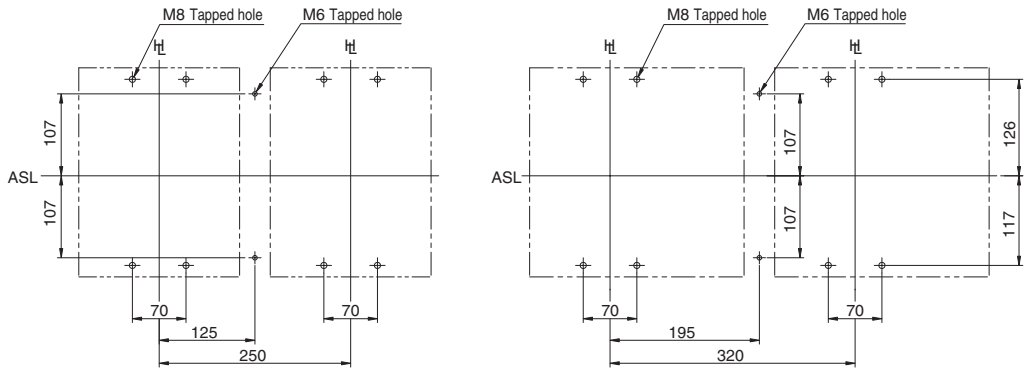

Dimensions, mm

Frame size (A)	Types of MCCBs	Number of poles	Breaker connection method	Interlock Order codes	Panel cutout, A (mm)	Panel cutout, B (mm)	C (mm)
600, 630, 800	**S630-CF/NF/NE/GN S800-CF/NF/NE/RF/RE/PF/PE/NN**	3	PMB	T2MS803SP	154.6	158.6	187
		4	PMB	T2MS804SP			
	H630-NE, H800-NE, L630-NE, L800-NE	3	PMB	T2MS803LP	191.6	195.6	224
		4	PMB	T2MS804LP			

Notes:

1: The terminal block can not be fitted to the right-hand side of the left breaker and to the left-hand side of the right breaker.

2: UVT with time-delay cannot be fitted to the left circuit breaker.

3: For high-performance electronic smart circuit breakers, the panel cutout dimensions will vary. Please contact us for details.

ASL : Arrangement Standard Line

HL : Handle Frame Centre Line

Panel cutout, A (front view)

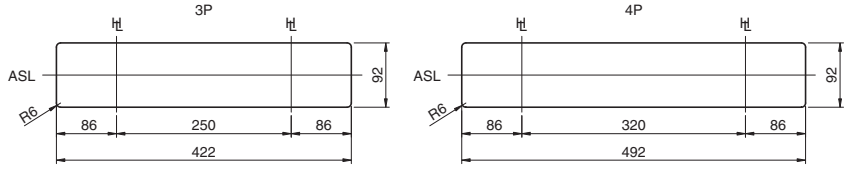

The cutout dimensions allow for a side clearance of 1.0mm from the bank of the breaker.

Panel cutout, B (front view)

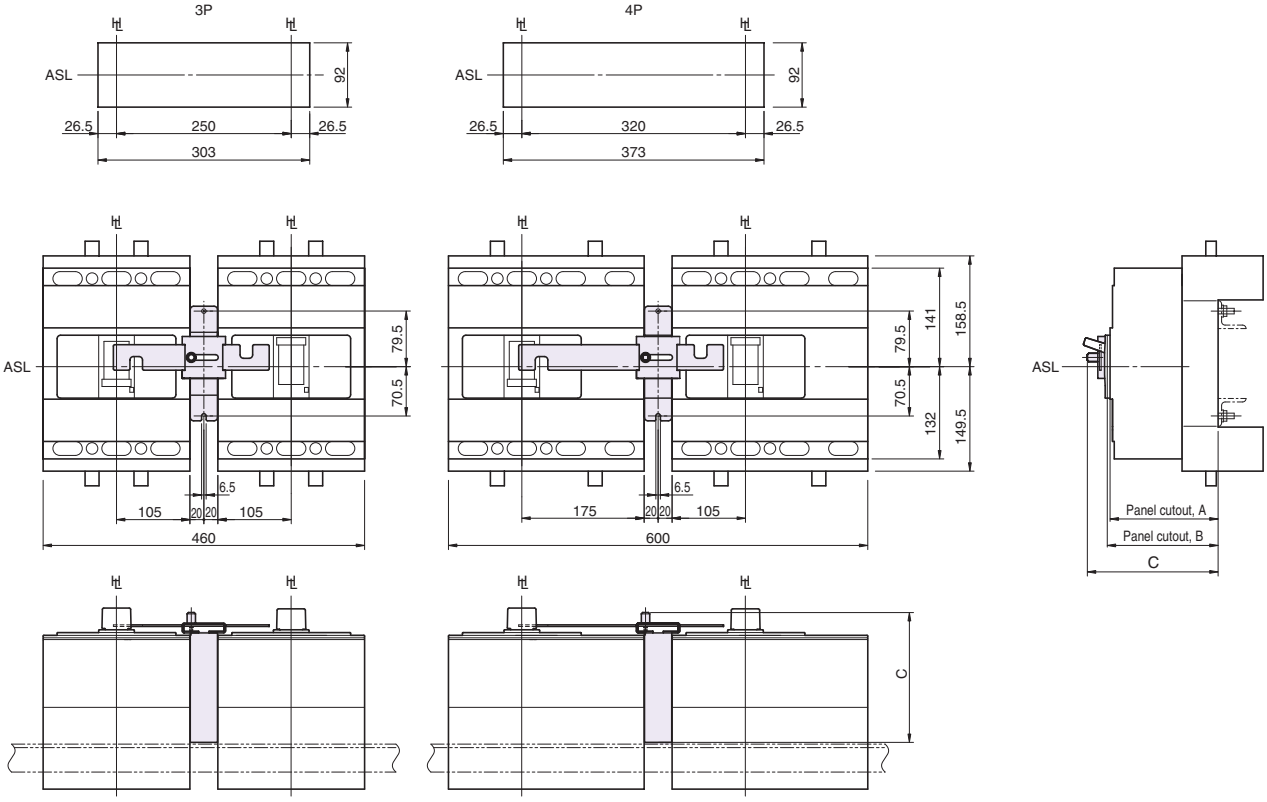

Drilling plan (front view)

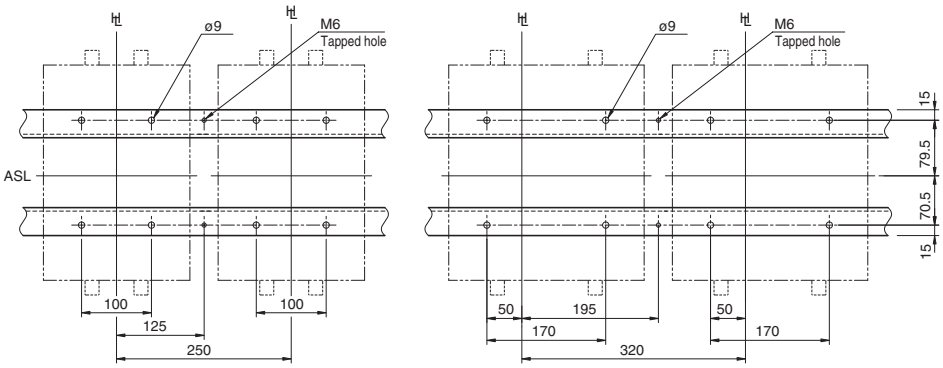

3 Externally mounted accessories

(1) Slide interlock (MS)

Dimensions, mm

Frame size (A)	Types of MCCBs	Number of poles	Breaker connection method	Interlock Order codes	Panel cutout, A (mm)	Panel cutout, B (mm)	C (mm)
600, 630, 800	**S630-CF/NF/NE/GN S800-CF/NF/NE/RF/RE/PF/PE/NN**	3	PMC	T2MS803SC	121	125	153.5
	H630-NE, H800-NE, L630-NE, L800-NE	3	PMC	T2MS803LC	158	162	190.5

Notes:
1: The terminal block can not be fitted to the right-hand side of the left breaker and to the left-hand side of the right breaker.
2: UVT with time-delay cannot be fitted to the left circuit breaker.
3: For high-performance electronic smart circuit breakers, the panel cutout dimensions will vary. Please contact us for details.

ASL : Arrangement Standard Line
HL : Handle Frame Centre Line

Panel cutout, A (front view)

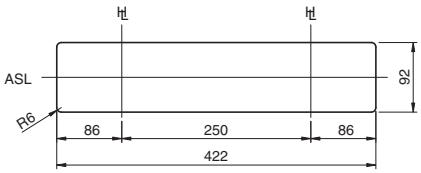

The cutout dimensions allow for a side clearance of 1.0mm from the bank of the breaker.

Panel cutout, B (front view)

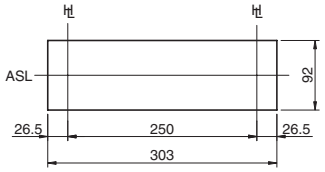

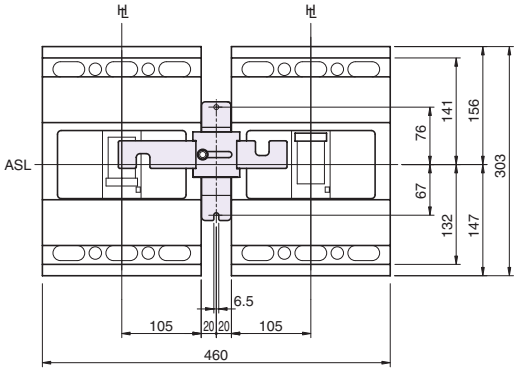

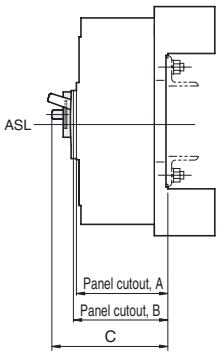

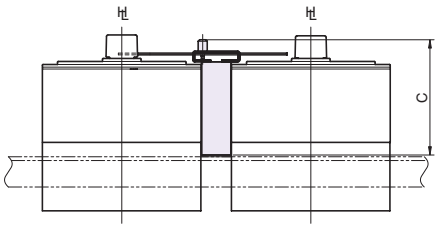

Drilling plan (front view)

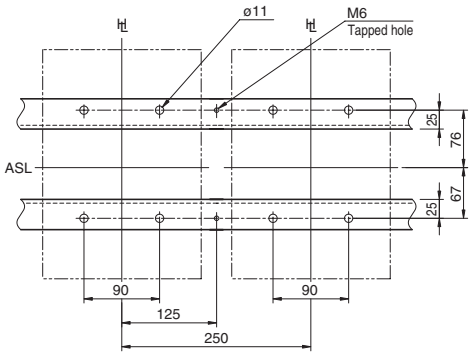

Dimensions, mm

Frame size (A)	Types of MCCBs	Interlock Order codes	Number of poles	a	b	c	d	e	f	g	h	k	m	ℓ	R
1000, 1200, 1250	**S1250-NE/GE/NN**	**T2MSX63SF**	3	220	340	124.5	61.5	343	53.5	74	127.5	430	159.2	30	8.5
		T2MSX64SF	4	290	410	124.5	61.5	413	53.5	74	127.5	570	159.2	30	8.5
	TL-1000NE, TL-1200NE	**XLF9** ①	3	220	340	129	61.5	343	58	74	132	430	179.6	30	8.5
			4	290	410	129	61.5	413	58	74	132	570	179.6	30	8.5
1600	**S1600-NE/NN**	**T2MSX63SF**	3	220	340	124.5	61.5	343	53.5	74	127.5	430	179.2	30	8.5
		T2MSX64SF	4	290	410	124.5	61.5	413	53.5	74	127.5	570	179.2	30	8.5

Notes:

①: Please order with the breakers.

1: The terminal block can not be fitted to the right-hand side of the left breaker and to the left-hand side of the right breaker.

2: The UVT controller or the OCR controller may be required to be installed external to the breaker.

3: See the outline dimensions of the breaker of chapter 7 for the drilling plan.

ASL : Arrangement Standard Line

: Handle Frame Centre Line

Panel cutout (front view)

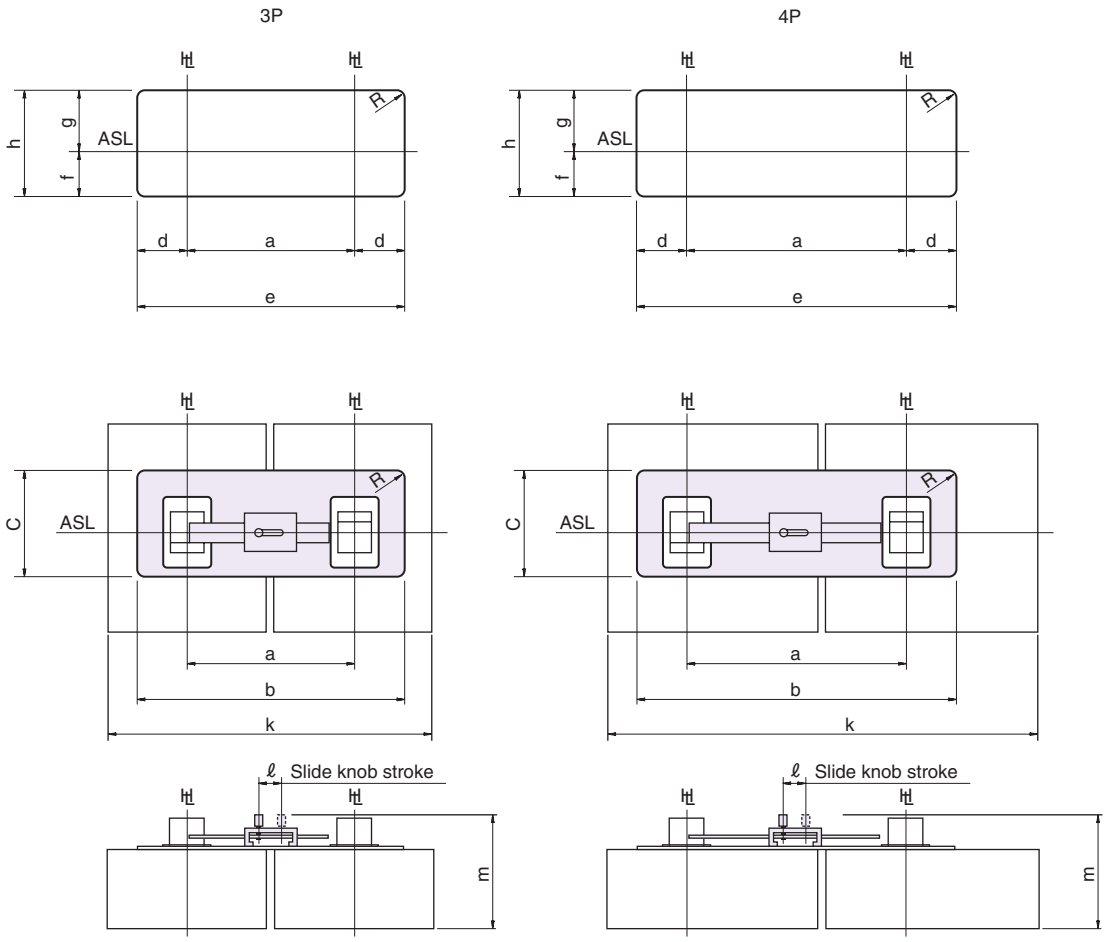

5. Mechanical interlock

ASL : Arrangement Standard Line
HL : Handle Frame Centre Line

(2) Rear-connected interlock (MB)

Dimensions, mm

Frame size (A)	Types of MCCBs	Types of ELCBs	Interlock Order codes	A (mm)
1000, 1200	**TL-1000NE, TL-1200NE**	—	Factory-installed	①
1250	**S1250-NE/GE/NN**	—	Factory-installed	120
1600	**S1600-NE/NN**	—	Factory-installed	140
2000	**XS2000NE, XS2000NN**	—	Factory-installed	①
2500, 3200	**XS2500NE, XS2500NN, XS3200NE (3P only), XS3200NN (3P only)**	—	Factory-installed	①

Notes:
①: Contact us for the detailed dimensions.
1: Not applicable for plug-in.
2: The terminal block can not be fitted to the right-hand side of the left breaker and to the left-hand side of the right breaker.
3: The UVT controller or the OCR controller may be required to be installed external to the breaker.

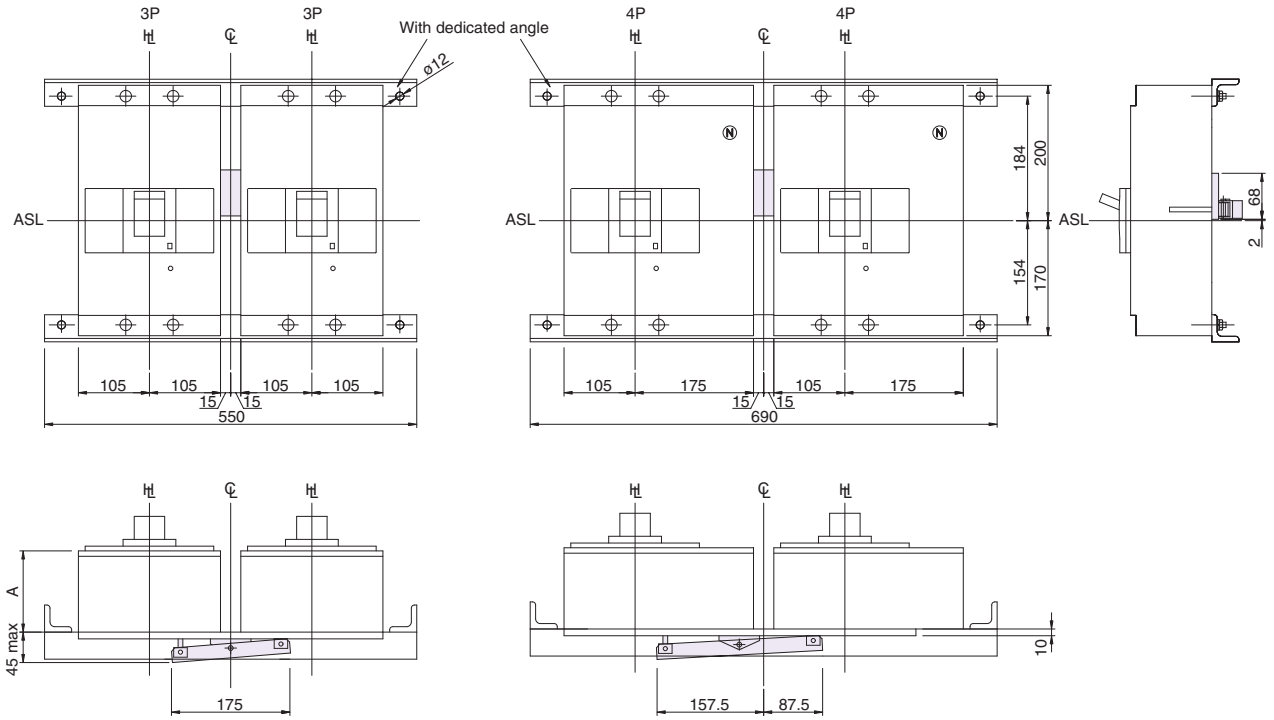

Drilling plan

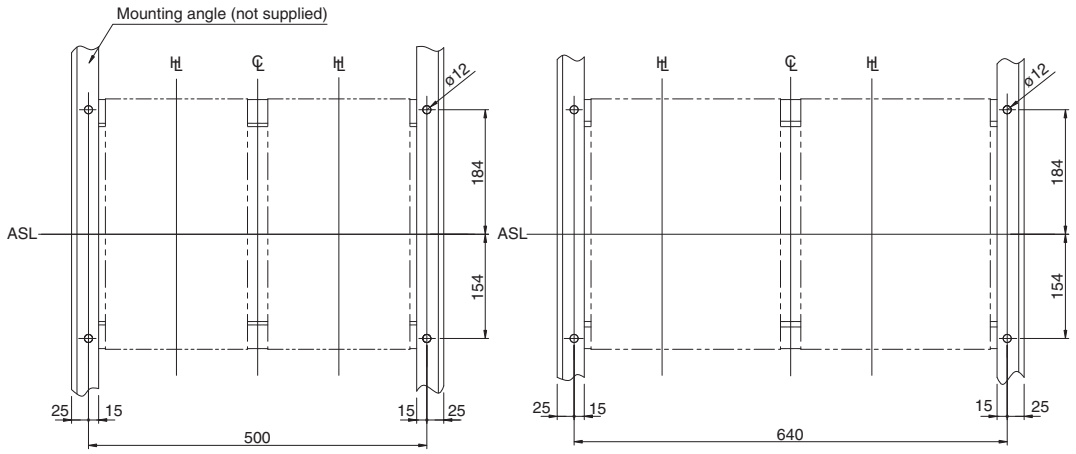

Ⓗ : Handle Frame Centre Line
℄ : Handle Centre Line

(3) Link Interlock (ML)

A type that interlocks the left and right circuit breakers with a link bar. It requires little space and is very easy to install.

Dimensions, mm

Frame size (A)	Types of MCCBs	Types of ELCBs	Number of poles	Position	Interlock Order codes
50, 100, 125	**PS50-PF, PS125-NF/PF/NN, PS125-NE/PE**	—	3	Right	Factory-installed
			4		
			3	Left	Factory-installed
			4		Factory-installed

Notes:
1: The lead wire terminal block cannot be fitted to either side of the left circuit breaker or to the left-hand side of the right circuit breaker.
2: UVT with time-delay cannot be fitted to the left circuit breaker.

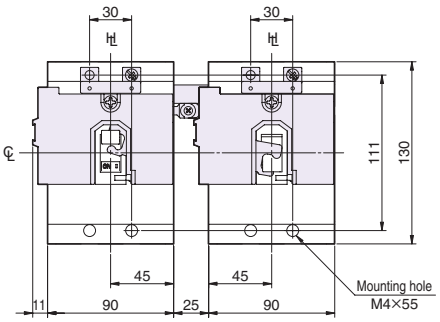

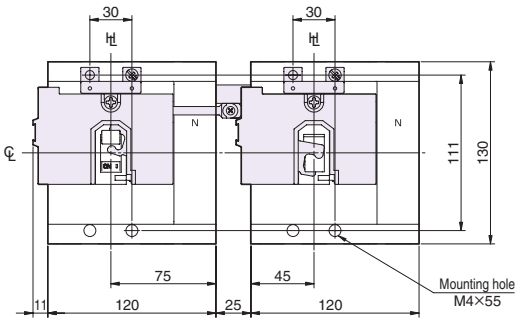

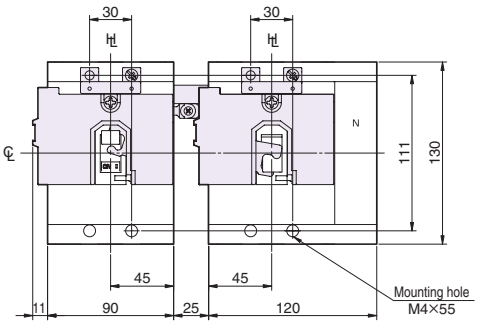

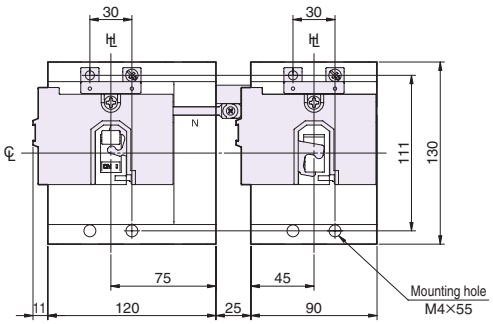

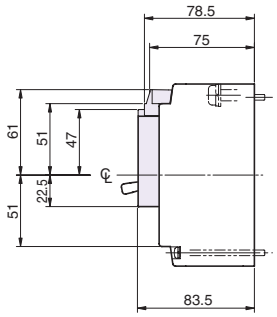

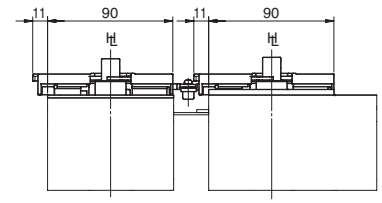

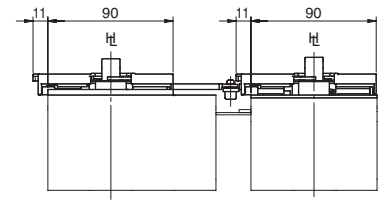

HL : Handle Frame Centre Line
℄ : Handle Centre Line

(3) Link Interlock (ML)

Dimensions, mm

Frame size (A)	Types of MCCBs	Types of ELCBs	Number of poles	Position	Interlock Order codes
225, 250	**PS250-PF/NN, PS250-NE/PE**	—	3	Right	Factory-installed
			4		
			3	Left	Factory-installed
			4		Factory-installed

Notes:
1: The extention bars for front connection cannot be applied due to insufficient insulation distance.
2: The terminal block can not be fitted to the right-hand side of the left breaker and to the left-hand side of the right breaker.
3: UVT with time-delay cannot be fitted to the left circuit breaker.

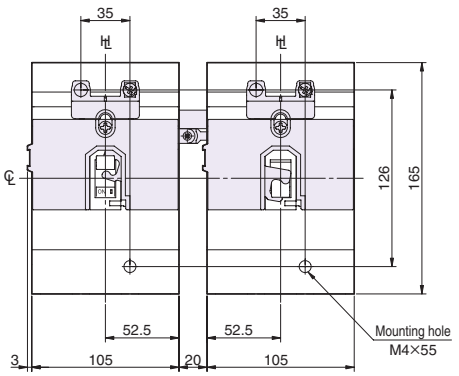

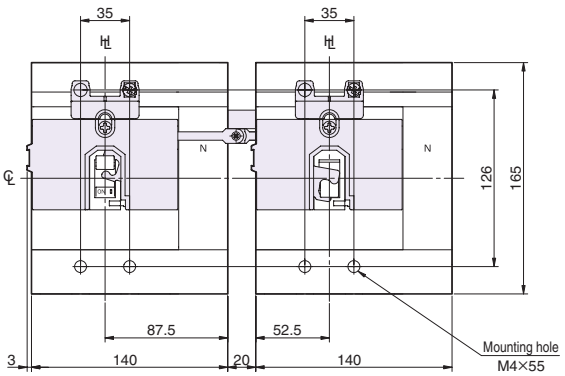

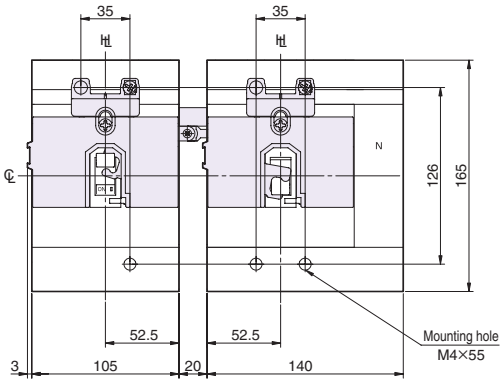

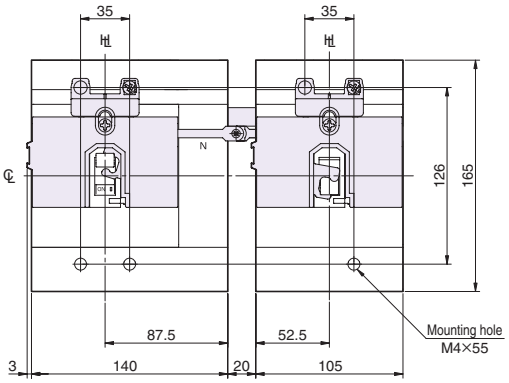

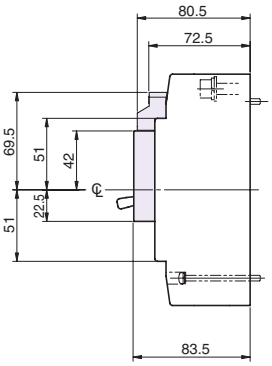

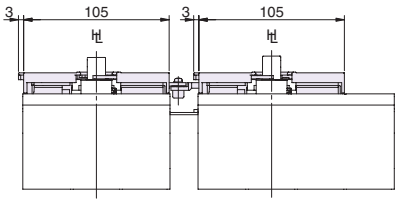

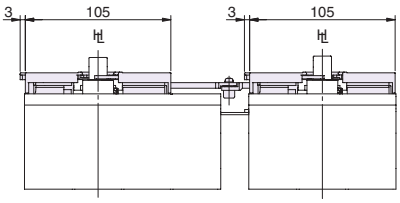

HL : Handle Frame Centre Line
℄ : Handle Centre Line

Dimensions, mm

Frame size (A)	Types of MCCBs	Types of ELCBs	Number of poles	Position	Interlock Order codes
100, 125	**S100-GF, S125-GF**	—	3	Right	Factory-installed
			4		
			3	Left	Factory-installed
			4		Factory-installed

Notes:

1: The terminal block can not be fitted to the right-hand side of the left breaker and to the left-hand side of the right breaker.

2: UVT with time-delay cannot be fitted to the left circuit breaker.

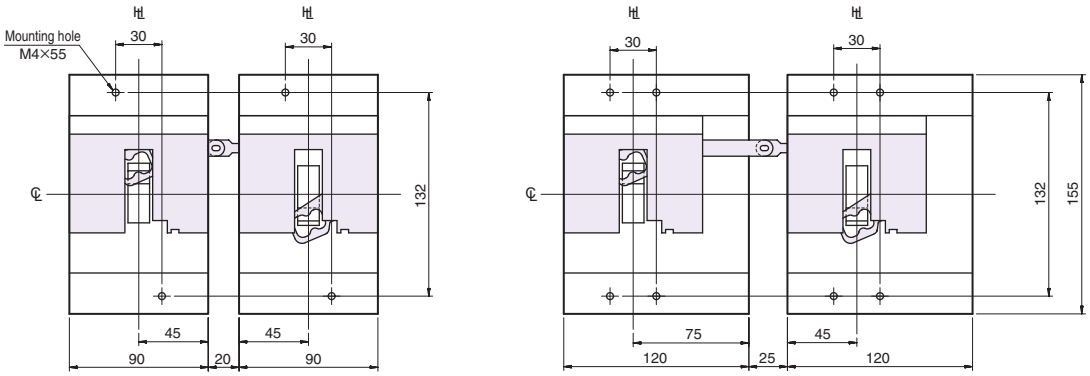

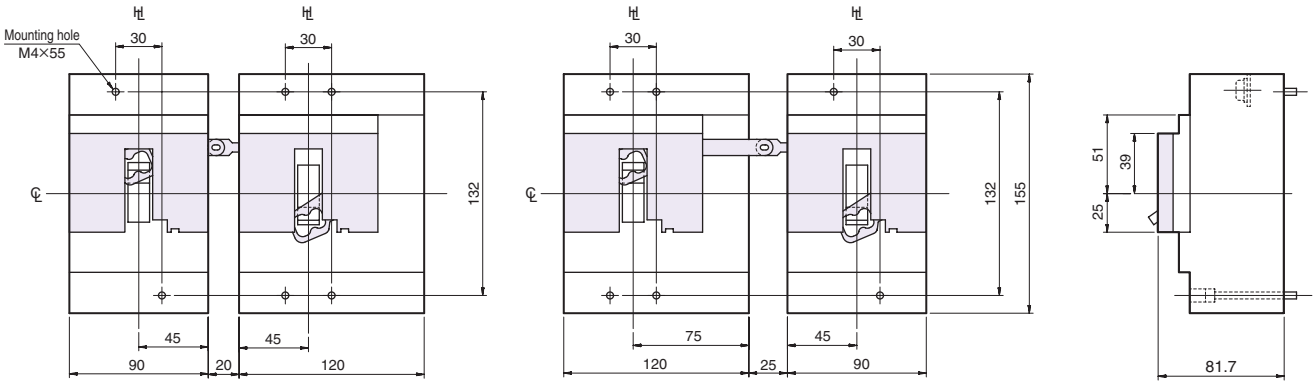

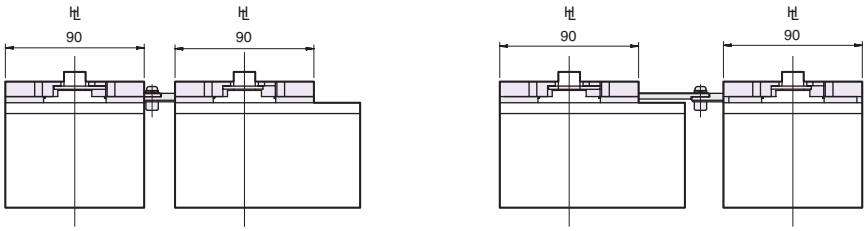

HL : Handle Frame Centre Line
℄ : Handle Centre Line

(3) Link Interlock (ML)

Dimensions, mm

Frame size (A)	Types of MCCBs	Types of ELCBs	Number of poles	Position	Interlock Order codes
225, 250	**E250-SF, S250-SF, S250-SM, S250-SN**	—	3	Right	Factory-installed
			4		
			3	Left	Factory-installed
			4		Factory-installed

Notes:
1: The extention bars for front connection cannot be applied due to insufficient insulation distance.
2: The terminal block can not be fitted to the right-hand side of the left breaker and to the left-hand side of the right breaker.
3: UVT with time-delay cannot be fitted to the left circuit breaker.

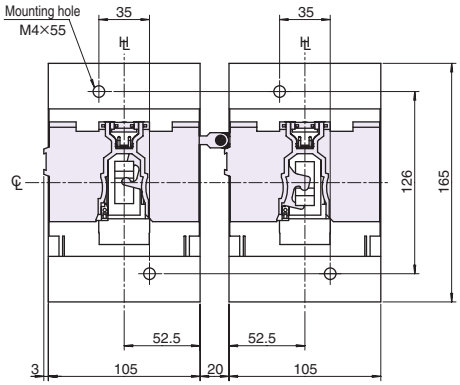

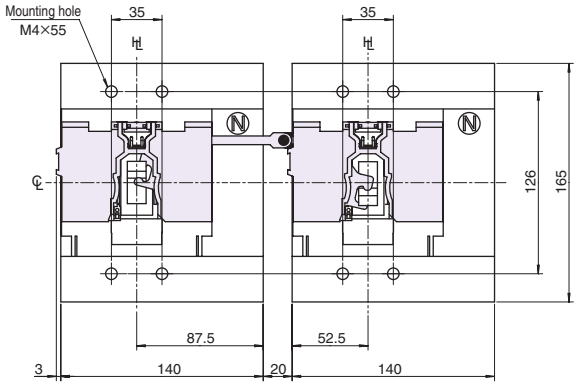

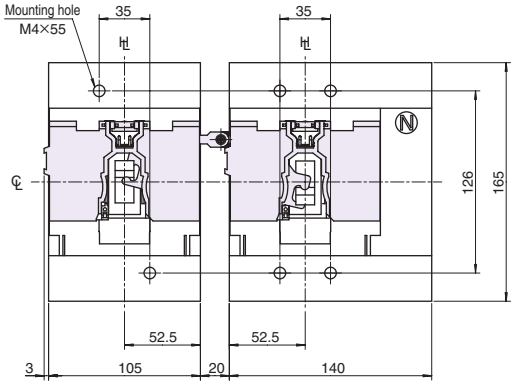

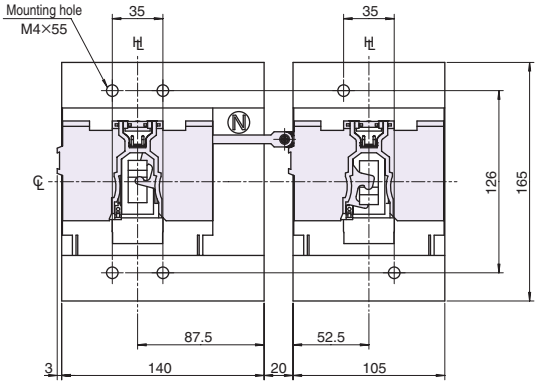

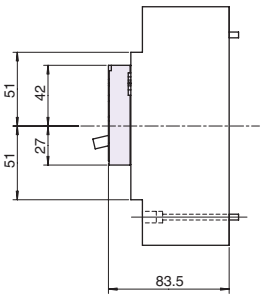

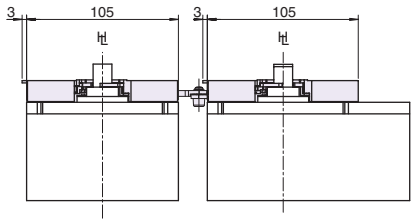

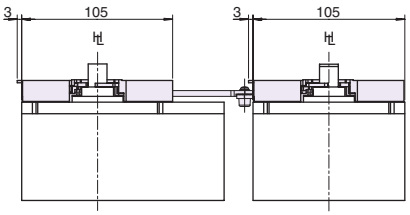

℄ : Handle Frame Centre Line
℄ : Handle Centre Line

Dimensions, mm

Frame size (A)	Types of MCCBs	Types of ELCBs	Number of poles	Position	Interlock Order codes
100, 125, 225, 250	**H100-NF, L100-NF, H125-NF, L125-NF, H225-NF/NE, L225-NF, H250-NF, L250-NF**	—	3	Right	Factory-installed
			4		
			3	Left	Factory-installed
			4		Factory-installed

Notes:

1: The extention bars for front connection cannot be applied due to insufficient insulation distance.
2: The terminal block can not be fitted to the right-hand side of the left breaker and to the left-hand side of the right breaker.
3: UVT with time-delay cannot be fitted to the left circuit breaker.

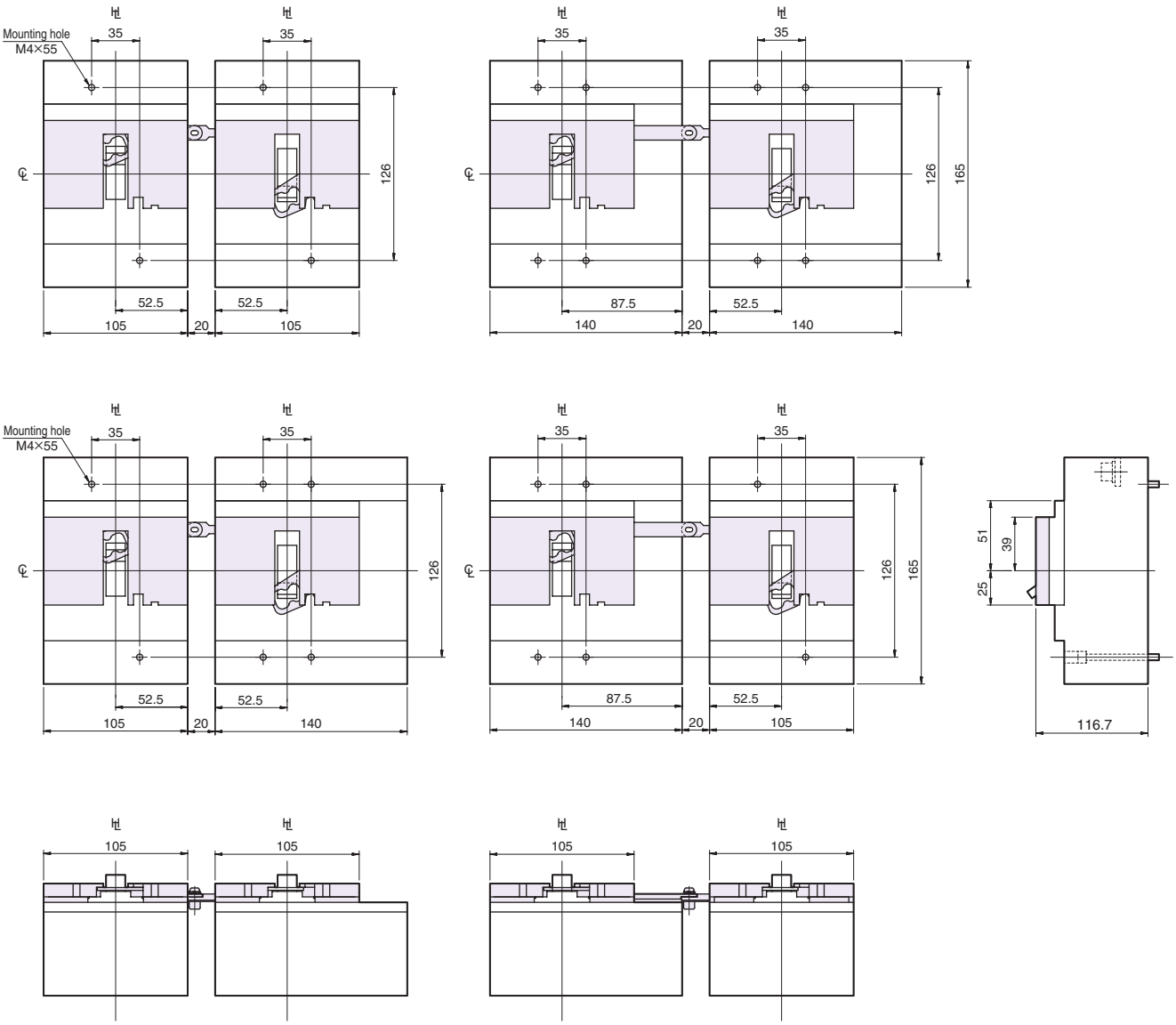

HL : Handle Frame Centre Line
℄ : Handle Centre Line

(3) Link Interlock (ML)

With motor operators

Dimensions, mm

Frame size (A)	Types of MCCBs	Types of ELCBs	Number of poles	Position	Interlock Order codes
400	**PS400-CF/NF/GF/NN, PS400-NE/GE, PH400-CF,PH400-CE**	—	3	Right	Factory-installed
			4		
600, 630	**PS630-CF/NF/GF/NN, PS630-NE/GE, PH630-CF,PH630-CE**		3	Left	Factory-installed
			4		Factory-installed

Notes:
1: The extention bars for front connection cannot be applied due to insufficient insulation distance.
2: Due to space limitations between the circuit breakers, the lead wire terminal block can only be fitted to either the right-hand side of the left breaker or the left-hand side of the right breaker.
3: Terminal covers cannot be fitted because they would interfere with each other.
4: The 400AF to 630AF link type interlock are only available with either the motor operator or external operating handle.
5: The interlock device is shipped installed to the breaker.

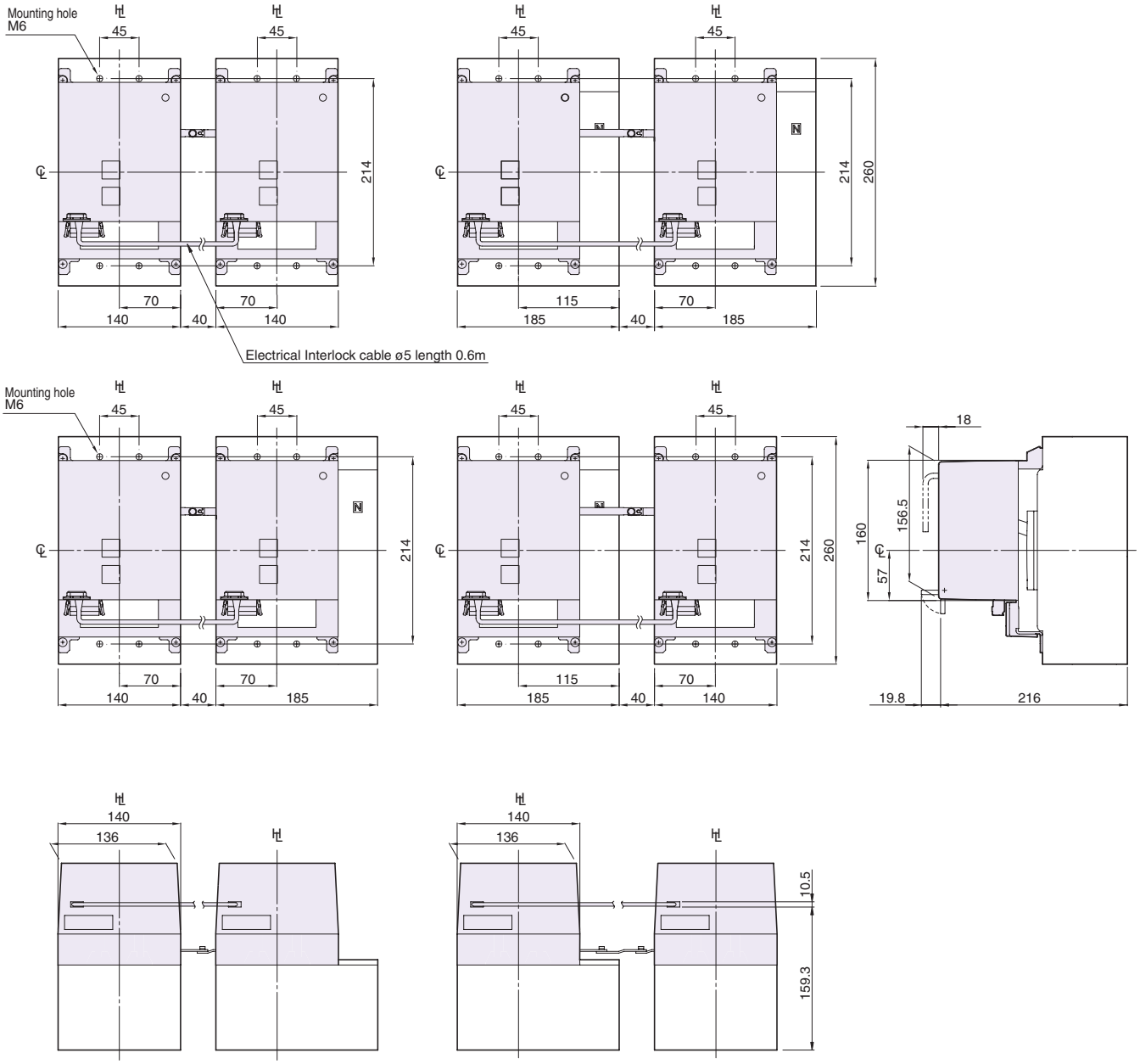

HL : Handle Frame Centre Line
℄ : Handle Centre Line

With external operating handle

Dimensions, mm

Frame size (A)	Types of MCCBs	Types of ELCBs	Number of poles	Position	Interlock Order codes
400	**PS400-CF/NF/GF/NN, PS400-NE/GE, PH400-CF,PH400-CE**	—	3	Right	Factory-installed
			4		
600, 630	**PS630-CF/NF/GF/NN, PS630-NE/GE, PH630-CF,PH630-CE**		3	Left	Factory-installed
			4		Factory-installed

Notes:

1: The extention bars for front connection cannot be applied due to insufficient insulation distance.
2: Due to space limitations between the circuit breakers, the lead wire terminal block can only be fitted to either the right-hand side of the left breaker or the left-hand side of the right breaker.
3: Terminal covers cannot be fitted because they would interfere with each other.
4: The 400AF to 630AF link type interlock are only available with either the motor operator or external operating handle.
5: The interlock device is shipped installed to the breaker. The external operating handle is supplied separately.

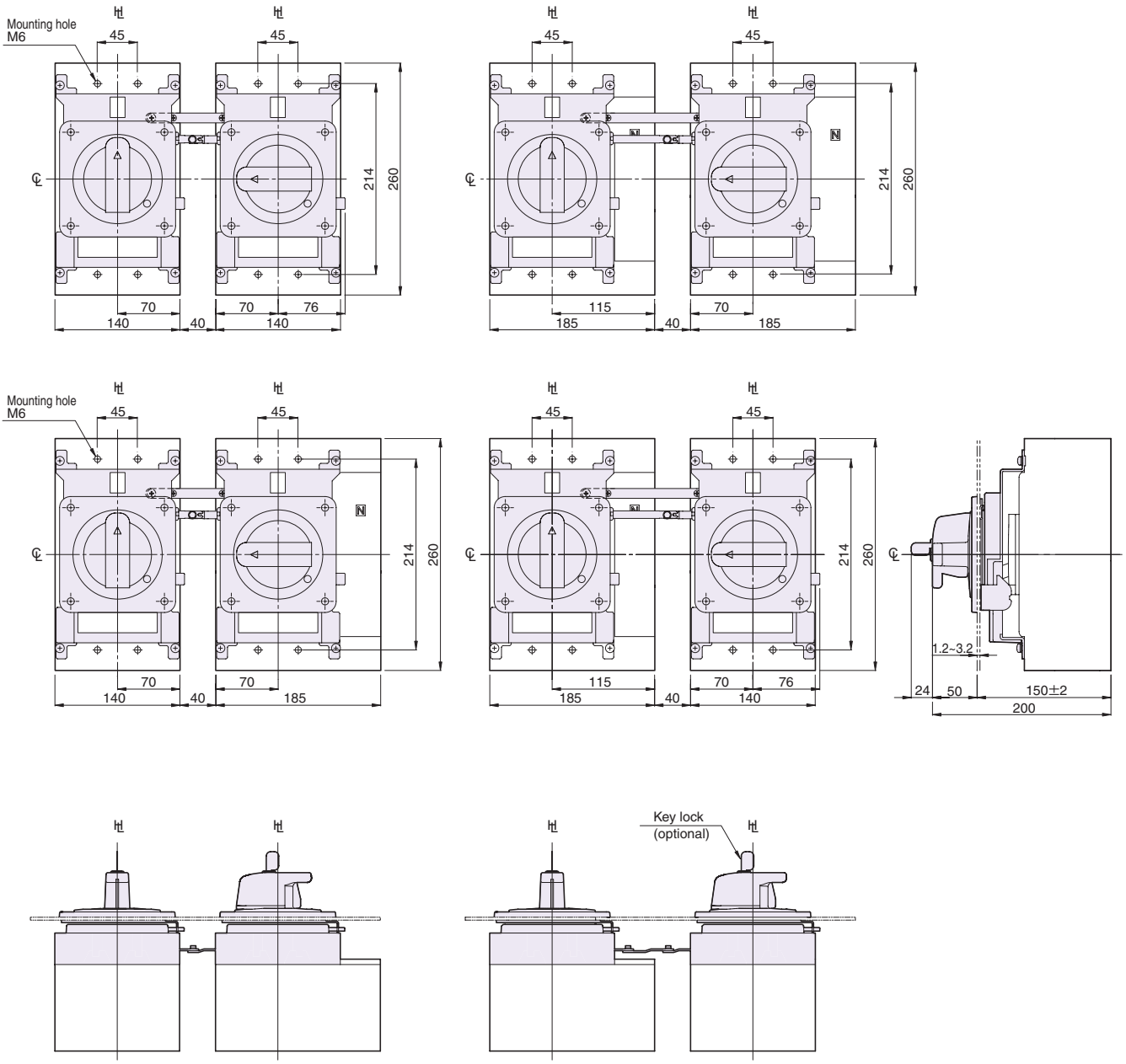

HL : Handle Frame Centre Line
℄ : Handle Centre Line

(3) Link Interlock (ML)

With motor operators

Dimensions, mm

Frame size (A)	Types of MCCBs	Types of ELCBs	Number of poles	Position	Interlock Order codes	A (mm)
400	**E400-NF**	—	3	Right	Factory-installed	213
			3	Left	Factory-installed	
	H400-NE, L400-NE	—	3	Right	Factory-installed	250
			4			
			3	Left	Factory-installed	
			4		Factory-installed	

Notes:
1: The extention bars for front connection cannot be applied due to insufficient insulation distance.
2: Due to space limitations between the circuit breakers, the lead wire terminal block can only be fitted to either the right-hand side of the left breaker or the left-hand side of the right breaker.
3: Terminal covers cannot be fitted because they would interfere with each other.
4: The 400AF link type interlock is only available with either the motor operator or external operating handle.
5: The interlock device is shipped installed to the breaker.

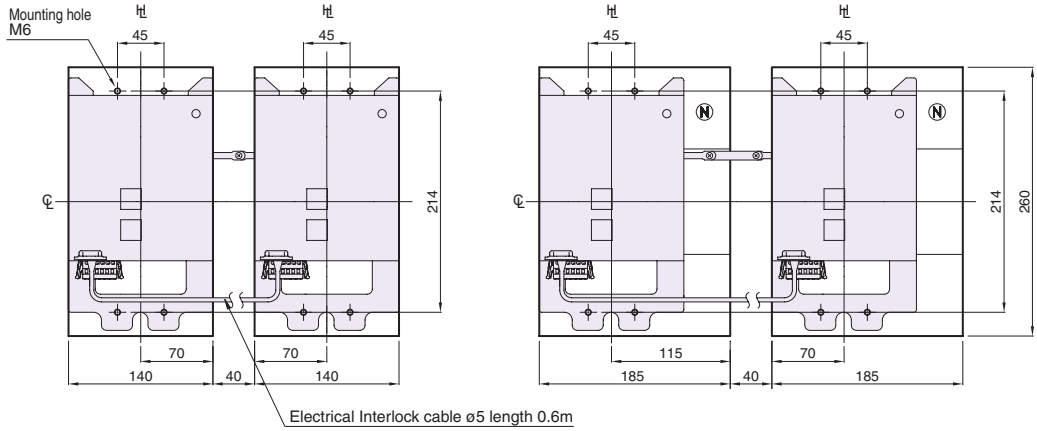

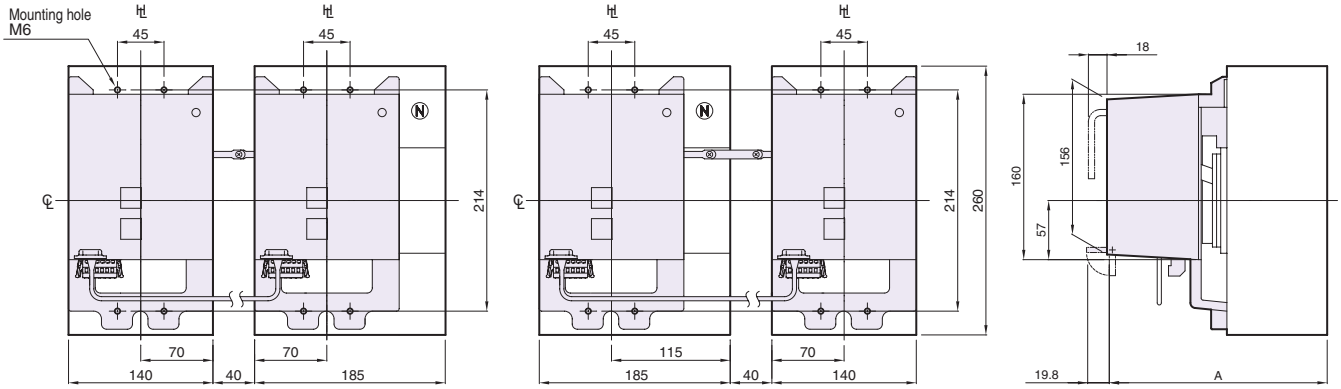

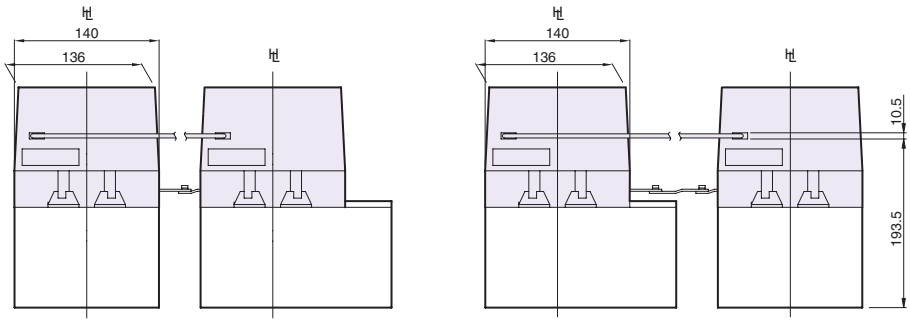

HL : Handle Frame Centre Line
℄ : Handle Centre Line

With external operating handle

Dimensions, mm

Frame size (A)	Types of MCCBs	Types of ELCBs	Number of poles	Position	Interlock Order codes	A (mm)	B (mm)
400	**E400-NF**	—	3	Right	Factory-installed	200	150±2
			3	Left	Factory-installed		
	H400-NE, L400-NE	—	3	Right	Factory-installed	237	187±2
			4				
			3	Left	Factory-installed		
			4		Factory-installed		

Notes:

1: The extention bars for front connection cannot be applied due to insufficient insulation distance.
2: Due to space limitations between the circuit breakers, the lead wire terminal block can only be fitted to either the right-hand side of the left breaker or the left-hand side of the right breaker.
3: Terminal covers cannot be fitted because they would interfere with each other.
4: The 400AF link type interlock is only available with either the motor operator or external operating handle.
5: The interlock device is shipped installed to the breaker. The external operating handle is supplied separately.

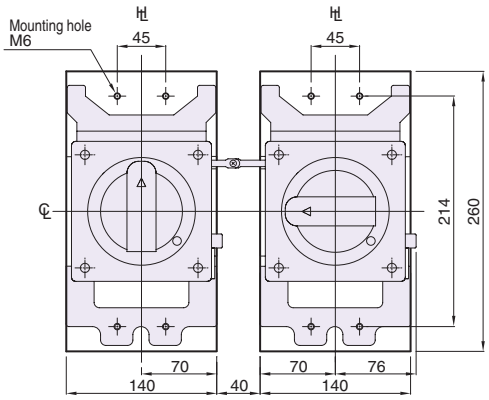

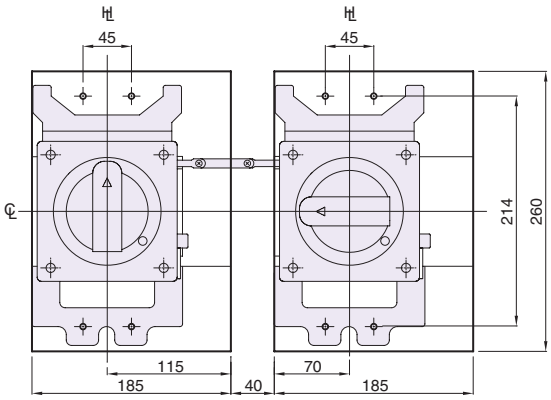

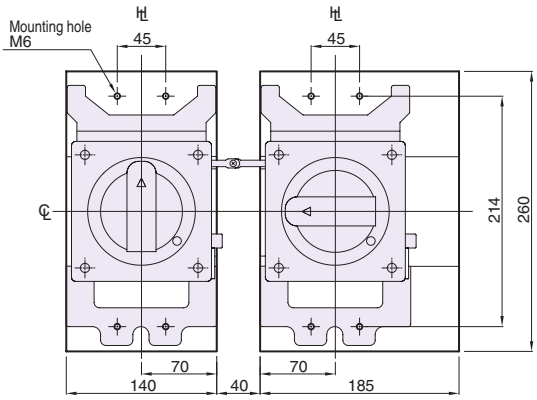

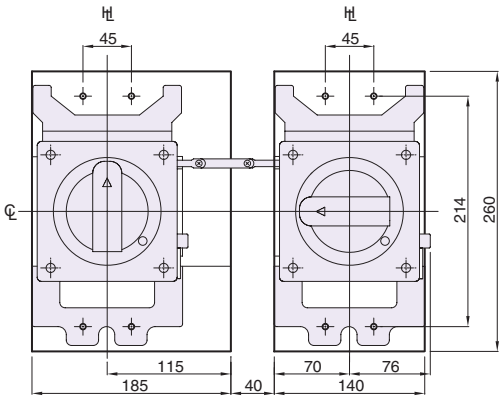

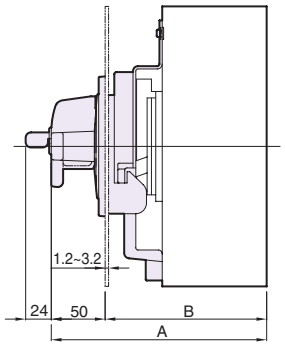

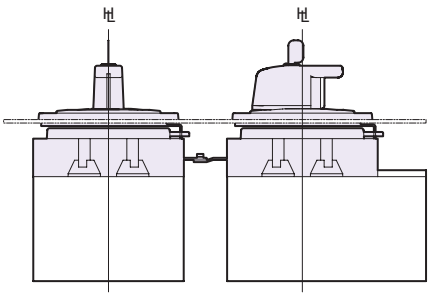

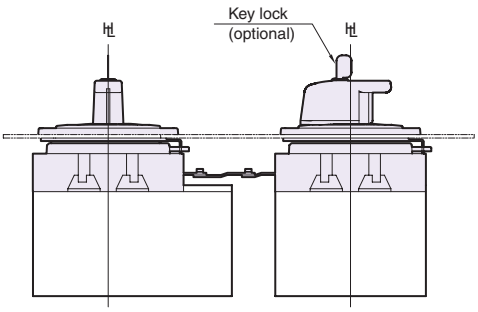

HL : Handle Frame Centre Line
℄ : Handle Centre Line

(3) Link Interlock (ML)

With motor operators

Dimensions, mm

Frame size (A)	Types of MCCBs	Types of ELCBs	Number of poles	Position	Interlock Order codes	A (mm)	B (mm)
600 630, 800, 1000	**S630-CF/NF/NE/GN,** **S800-CF/NF/NE/RF/RE/PF/PE/NN,** **S1000-CE/NN**	—	3	Right	Factory-installed	213	156.5
			4				
			3	Left	Factory-installed		
			4		Factory-installed		
	H630-NE, H800-NE, **L630-NE, L800-NE**	—	3	Right	Factory-installed	250	193.5
			4				
			3	Left	Factory-installed		
			4		Factory-installed		

Notes:
1: Due to space limitations between the circuit breakers, the lead wire terminal block can only be fitted to either the right-hand side of the left breaker or the left-hand side of the right breaker.
2: The 630AF to 1000AF link type interlock are only available with the motor operator or external operating handle.
3: The interlock device is shipped installed to the breaker.

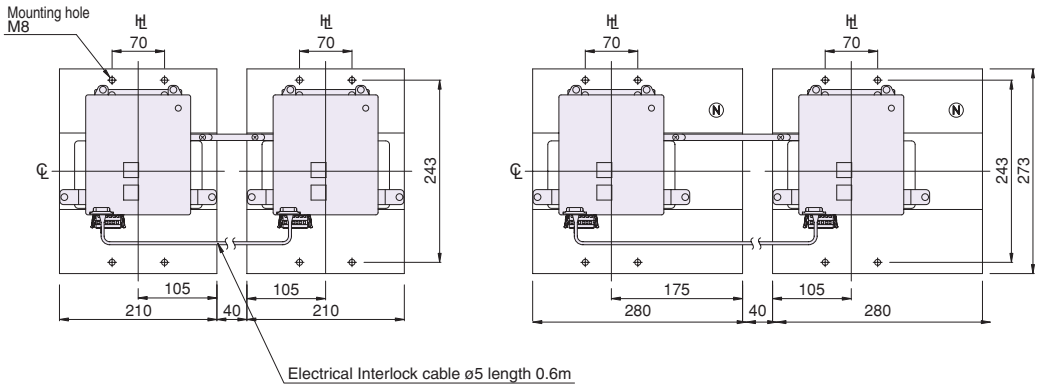

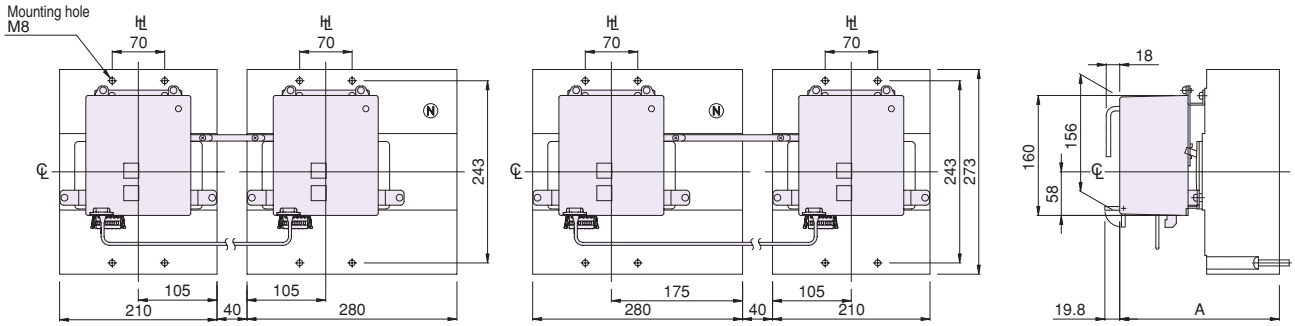

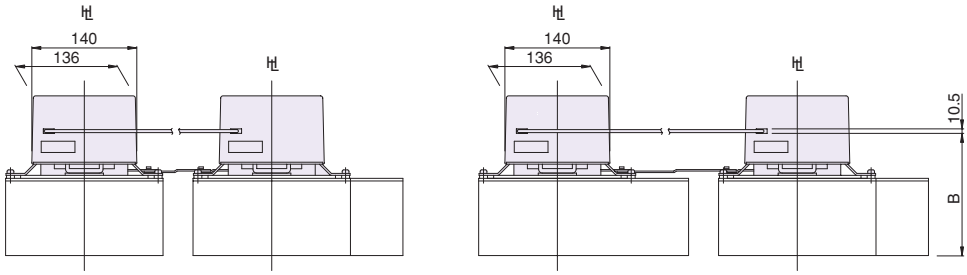

Ⓗ : Handle Frame Centre Line
℄ : Handle Centre Line

With external operating handle

Dimensions, mm

Frame size (A)	Types of MCCBs	Types of ELCBs	Number of poles	Position	Interlock Order codes	A (mm)	B (mm)
600 630, 800, 1000	**S630-CF/NF/NE/GN, S800-CF/NF/NE/RF/RE/PF/PE/NN, S1000-CE/NN**	—	3	Right	Factory-installed	200	150
			4				
			3	Left	Factory-installed		
			4		Factory-installed		
	H630-NE, H800-NE, L630-NE, L800-NE	—	3	Right	Factory-installed	237	187
			4				
			3	Left	Factory-installed		
			4		Factory-installed		

Notes:

1: Due to space limitations between the circuit breakers, the lead wire terminal block can only be fitted to either the right-hand side of the left breaker or the left-hand side of the right breaker.
2: The 630AF to 1000AF link type interlock are only available with either the motor operator or external operating handle.
3: The interlock device is shipped installed to the breaker. The external operating handle is supplied separately.

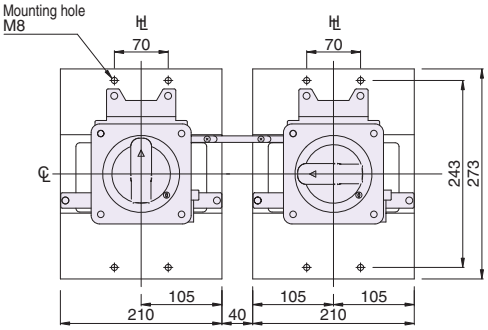

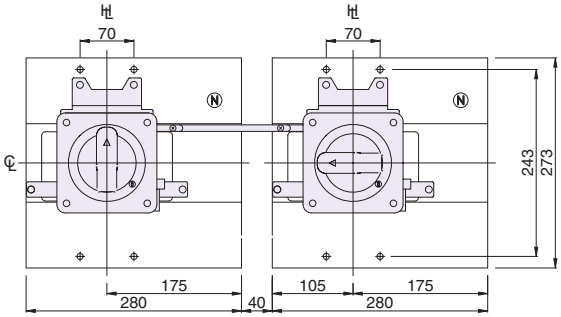

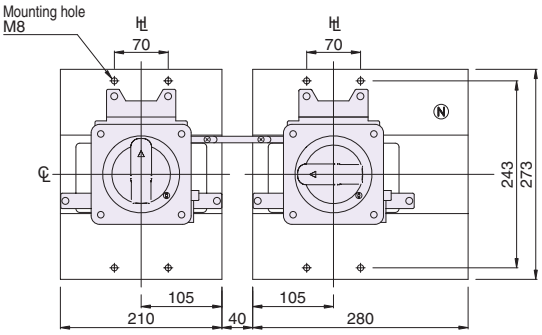

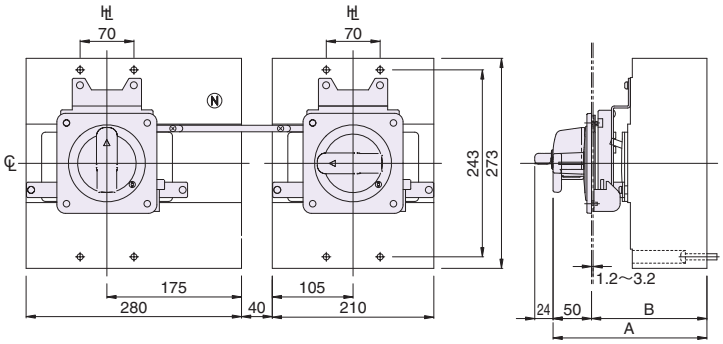

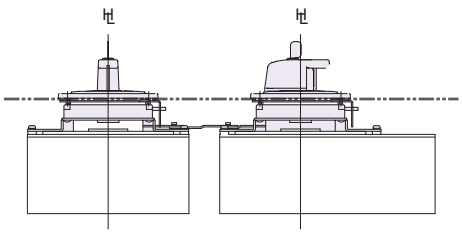

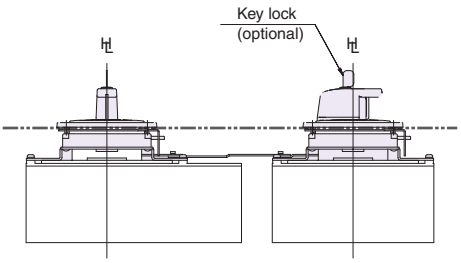

5. Mechanical interlock

HL : Handle Frame Centre Line
℄ : Handle Centre Line

(4) Wire interlock (MW)

A type that interlocks the left and right circuit breakers with a wire. It is possible to interlock between circuit breakers of different sizes.

Dimensions, mm

Frame size (A)	Types of MCCBs	Types of ELCBs	Interlock Order codes
50, 100, 125	**PS50-PF, PS125-NF/PF/NN, PS125-NE/PE**	—	Factory-installed

Interlock wire order codes (length)	C (mm)	D (mm)
TPMW00S(1m)	140min.-480max.	170min.-480max.
TPMW00L(1.5m)	140min.-980max.	170min.-980max.

Note:
1: The lead wire terminal block cannot be fitted to the left-hand side of the circuit breaker because it would interfere with the interlock device.

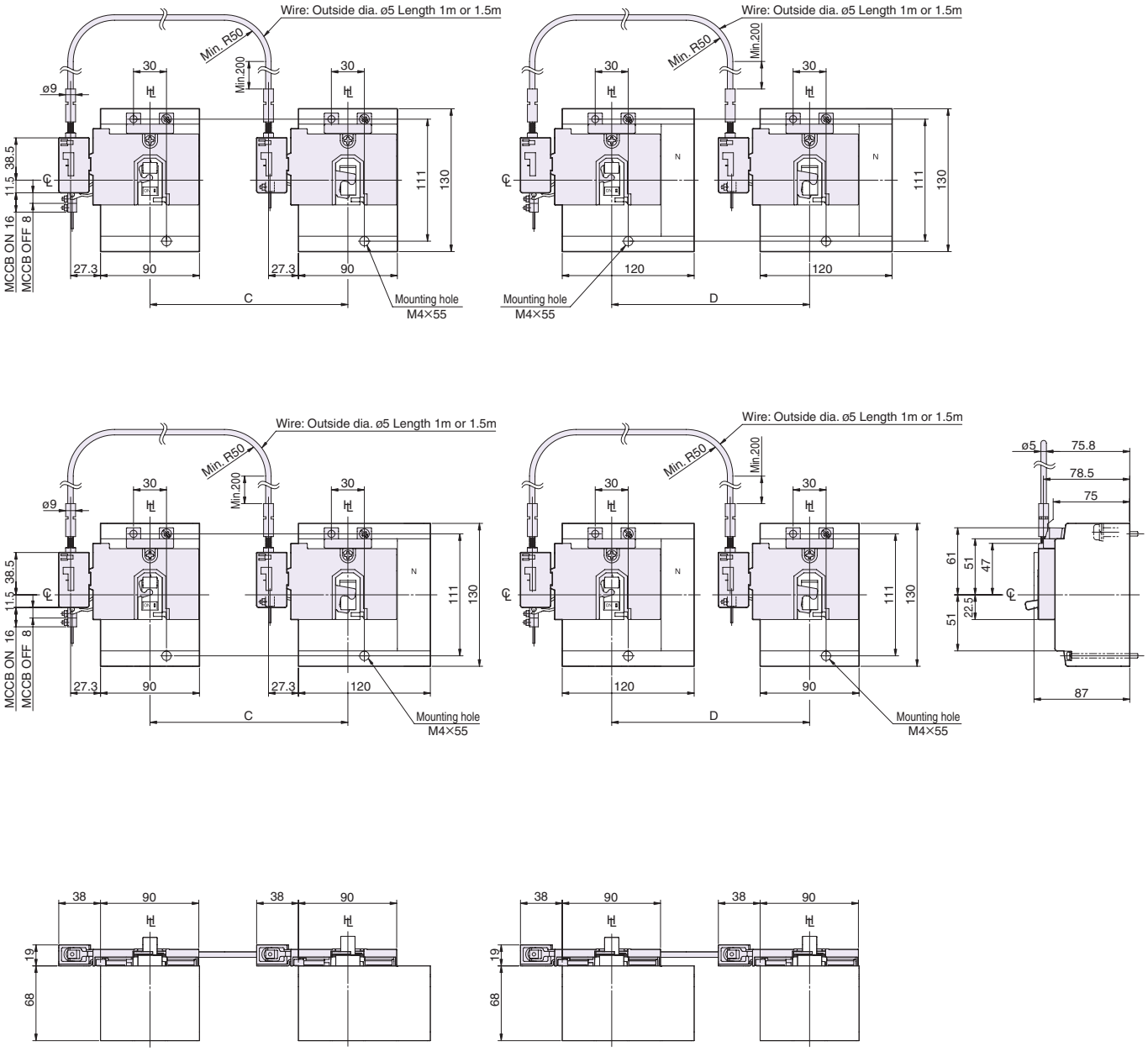

HL : Handle Frame Centre Line
℄ : Handle Centre Line

Dimensions, mm

Frame size (A)	Types of MCCBs	Types of ELCBs	Interlock Order codes
225, 250	**PS250-PF/NN, PS250-NE/PE**	—	Factory-installed

Interlock wire order codes (length)	C (mm)	D (mm)
TPMW00S(1m)	155min.-480max.	180min.-480max.
TPMW00L(1.5m)	155min.-980max.	180min.-980max.

Note:

1: The lead wire terminal block cannot be fitted to the left-hand side of the circuit breaker because it would interfere with the interlock device.

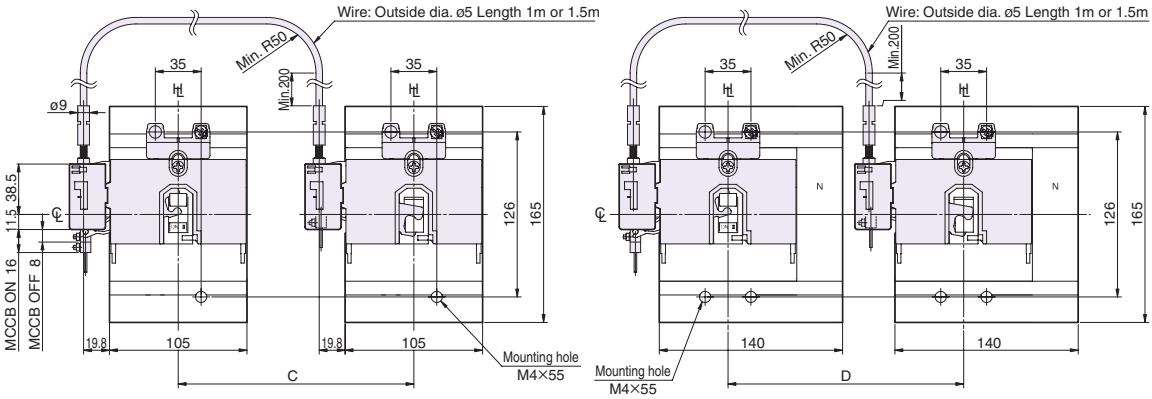

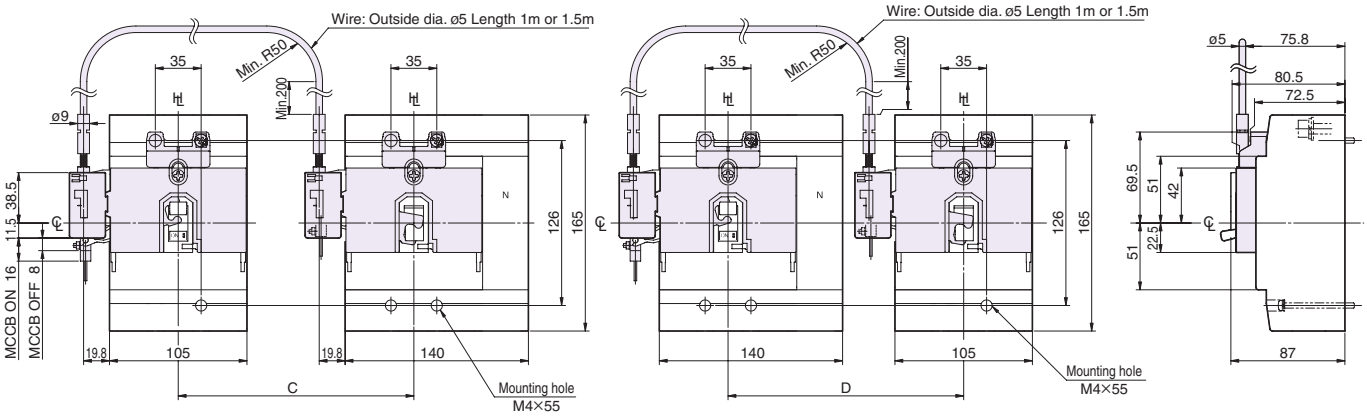

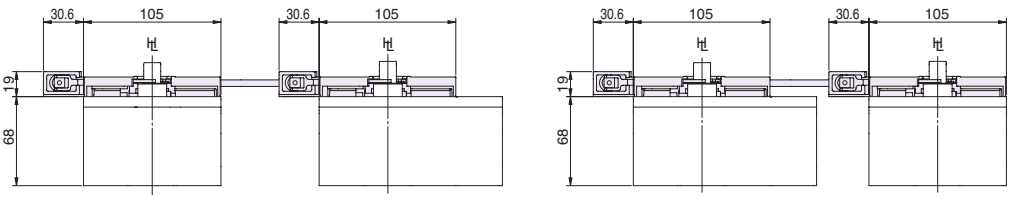

HL : Handle Frame Centre Line
℄ : Handle Centre Line

(4) Wire interlock (MW)

Dimensions, mm

Frame size (A)	Types of MCCBs	Types of ELCBs	Interlock Order codes
100, 125	**S100-GF, S125-GF**	—	Factory-installed

Interlock wire order codes (length)	C (mm)	D (mm)
T2MW00S(1m)	130min.-480max.	160min.-480max.
T2MW00L(1.5m)	130min.-980max.	160min.-980max.

Note:
1: The lead wire terminal block cannot be fitted to the left-hand side of the circuit breaker because it would interfere with the interlock device.

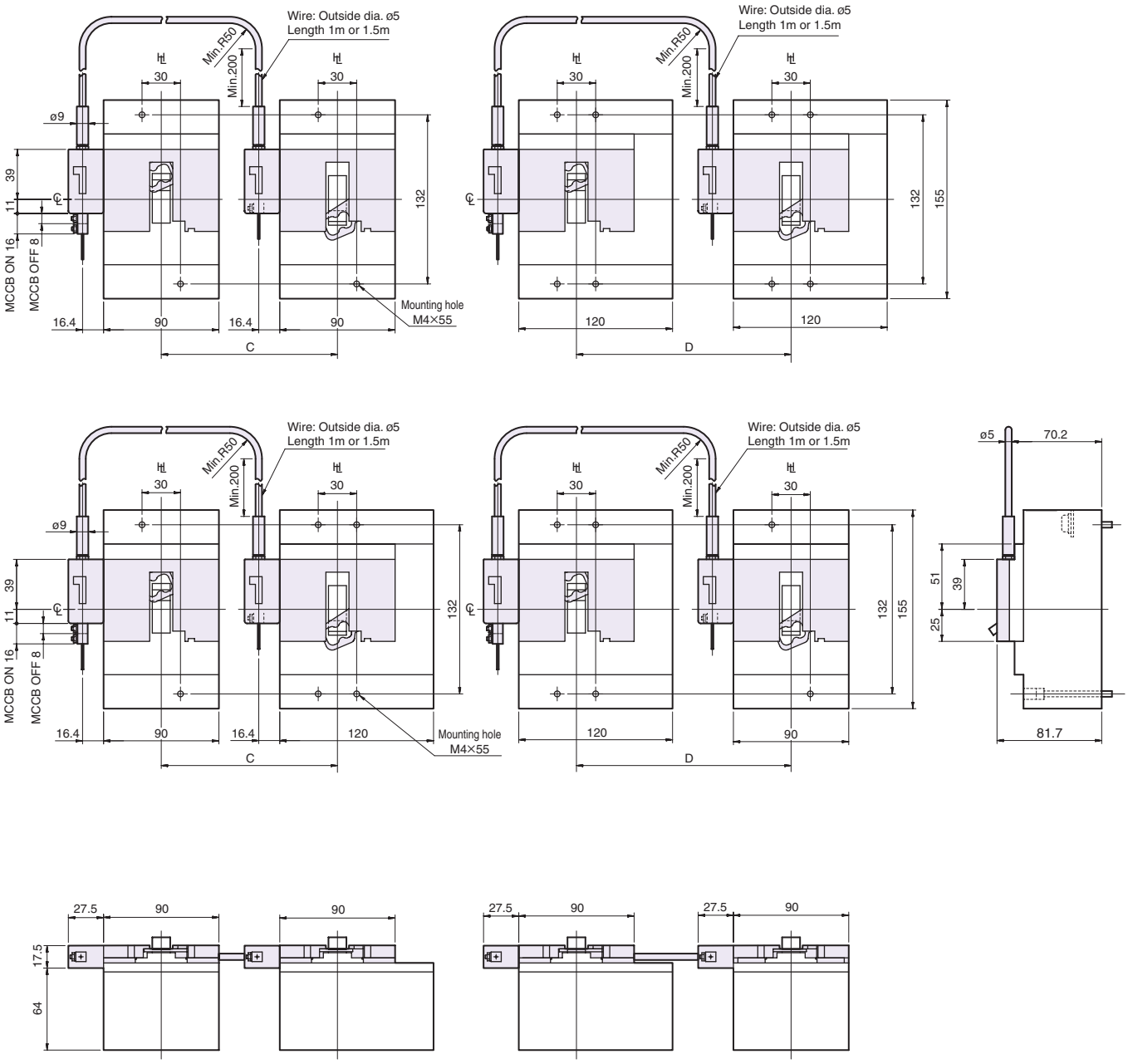

HL : Handle Frame Centre Line
℄ : Handle Centre Line

Dimensions, mm

Frame size (A)	Types of MCCBs	Types of ELCBs	Interlock Order codes
225, 250	**E250-SF, S250-SF, S250-SM, S250-SN**	—	Factory-installed

Interlock wire order codes (length)	C (mm)	D (mm)
T2MW00S(1m)	155min.-480max.	180min.-480max.
T2MW00L(1.5m)	155min.-980max.	180min.-980max.

Note:

1: The lead wire terminal block cannot be fitted to the left-hand side of the circuit breaker because it would interfere with the interlock device.

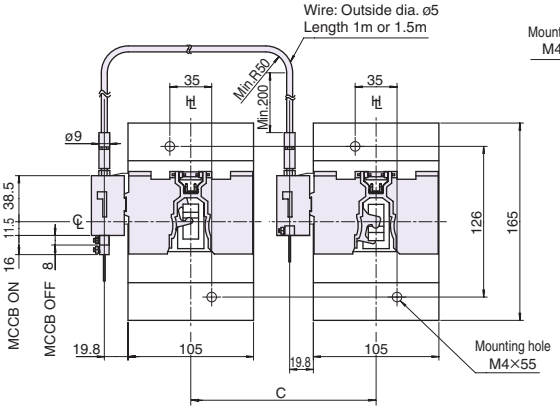

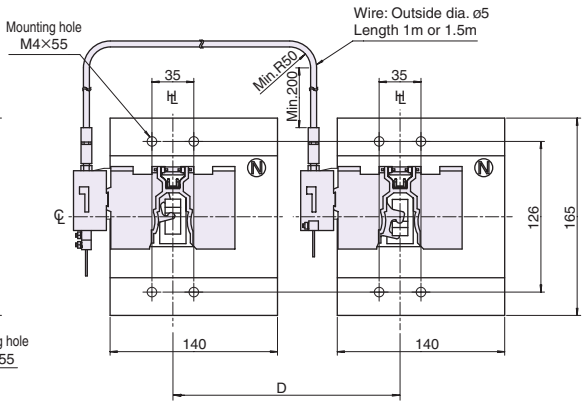

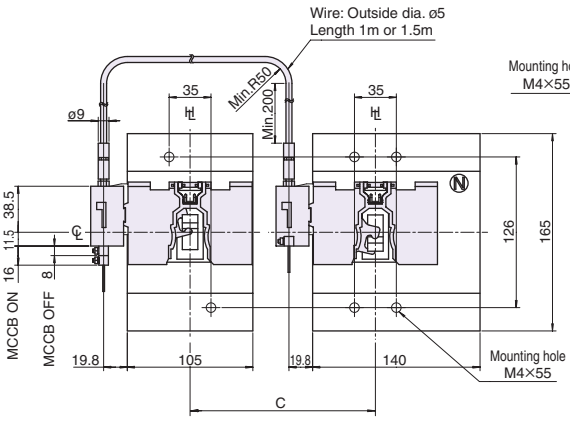

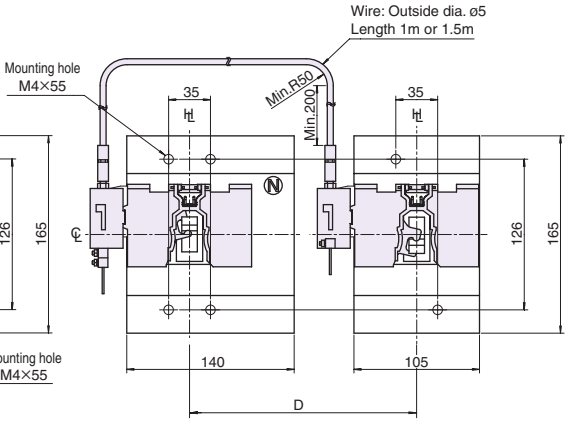

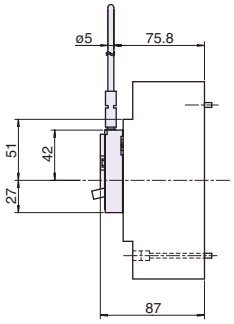

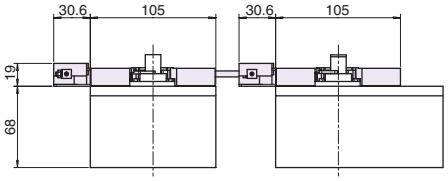

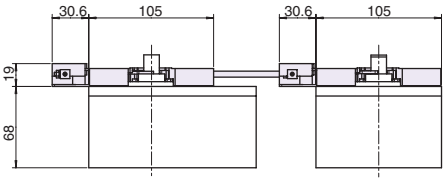

HL : Handle Frame Centre Line
℄ : Handle Centre Line

(4) Wire interlock (MW)

Dimensions, mm

Frame size (A)	Types of MCCBs	Types of ELCBs	Interlock Order codes
100, 125, 225, 250	**H100-NF, L100-NF, H125-NF, L125-NF, H225-NF/NE, L225-NF, H250-NF, L250-NF**	—	Factory-installed

Interlock wire order codes (length)	C (mm)	D (mm)
T2MW00S(1m)	155min.-480max.	180min.-480max.
T2MW00L(1.5m)	155min.-980max.	180min.-980max.

Note:
1: The lead wire terminal block cannot be fitted to the left-hand side of the circuit breaker because it would interfere with the interlock device.

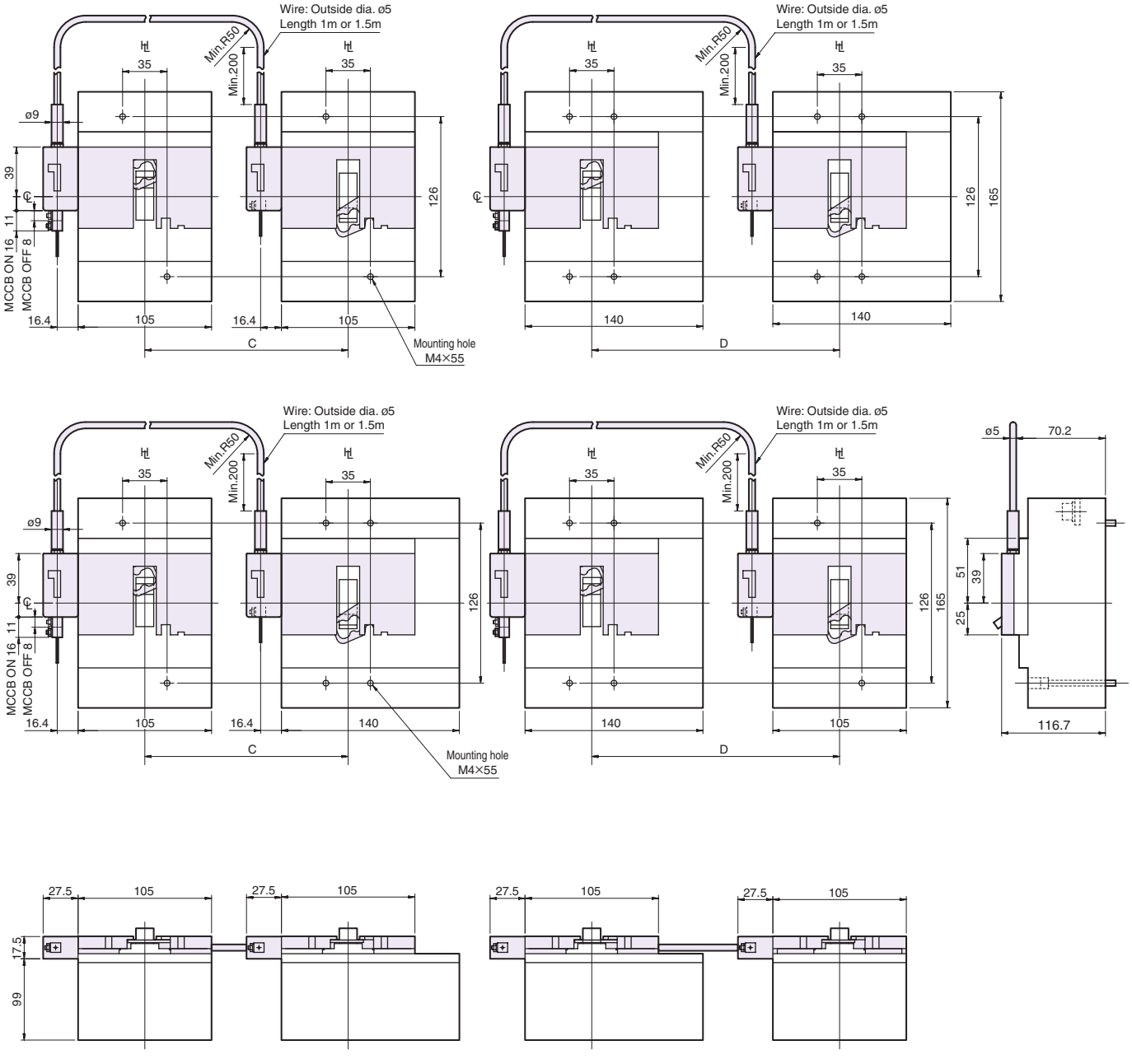

HL : Handle Frame Centre Line
℄ : Handle Centre Line

With motor operators

Dimensions, mm

Frame size (A)	Types of MCCBs	Types of ELCBs	Interlock Order codes
400	**E400-NF**	—	Factory-installed

Interlock wire order codes (length)	C (mm)	D (mm)
T2MW00S(1m)	180min.-430max.	225min.-430max.
T2MW00L(1.5m)	180min.-930max.	225min.-930max.

Notes:

1: The lead wire terminal block cannot be fitted to the left-hand side of the circuit breaker because it would interfere with the interlock device.

2: The 400AF Wire interlock is only available with either the motor operator or external operating handle.

3: The interlock device is shipped installed to the breaker.

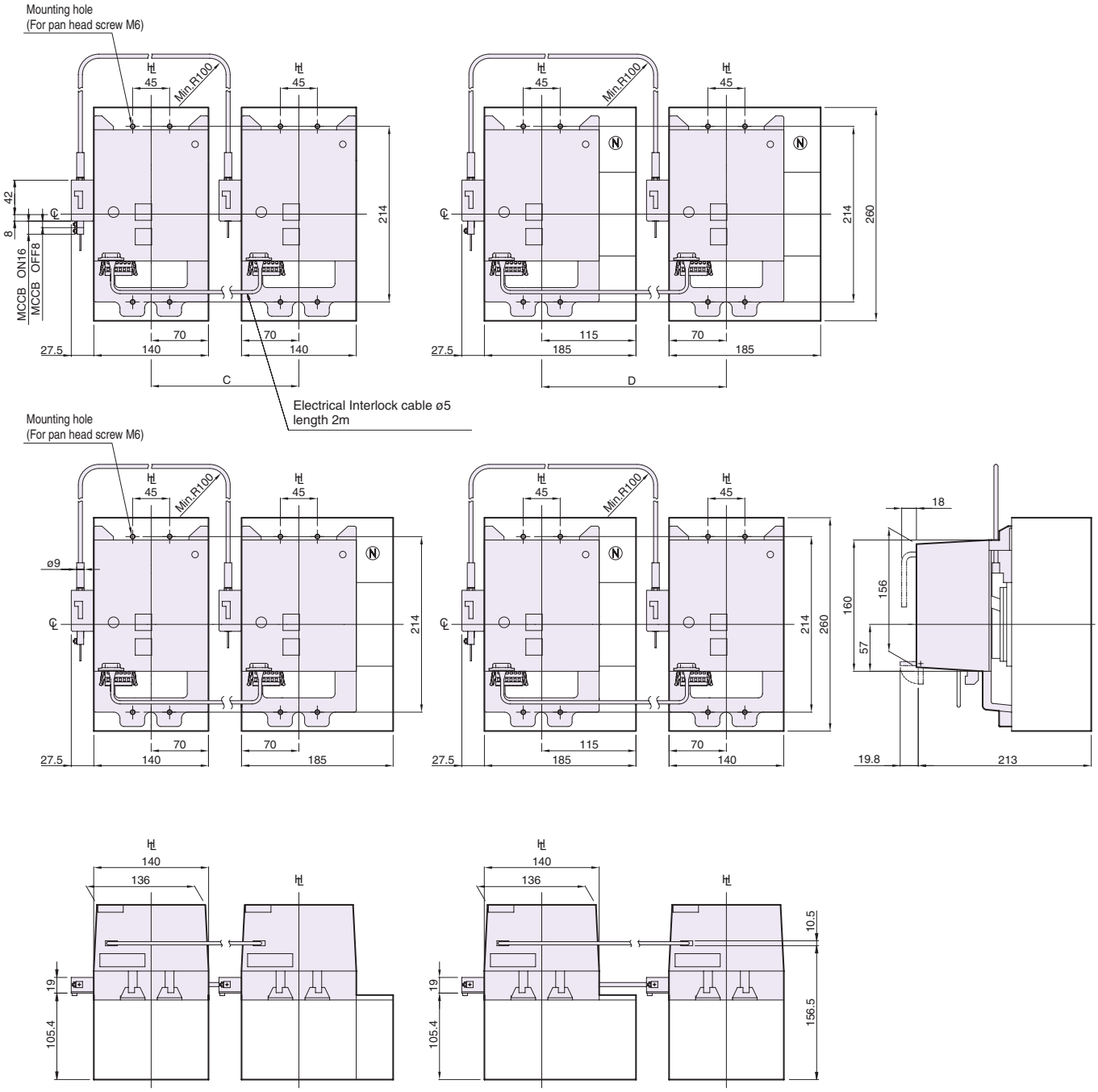

HL : Handle Frame Centre Line
℄ : Handle Centre Line

(4) Wire interlock (MW)

With external operating handle

Dimensions, mm

Frame size (A)	Types of MCCBs	Types of ELCBs	Interlock Order codes
400	**E400-NF**	—	Factory-installed

Interlock wire order codes (length)	C (mm)	D (mm)
T2MW00S(1m)	180min.-430max.	225min.-430max.
T2MW00L(1.5m)	180min.-930max.	225min.-930max.

Notes:
1: The lead wire terminal block cannot be fitted to the left-hand side of the circuit breaker because it would interfere with the interlock device.
2: The 400AF Wire interlock is only available with either the motor operator or external operating handle.
3: The interlock device is shipped installed to the breaker. The external operating handle is supplied separately.

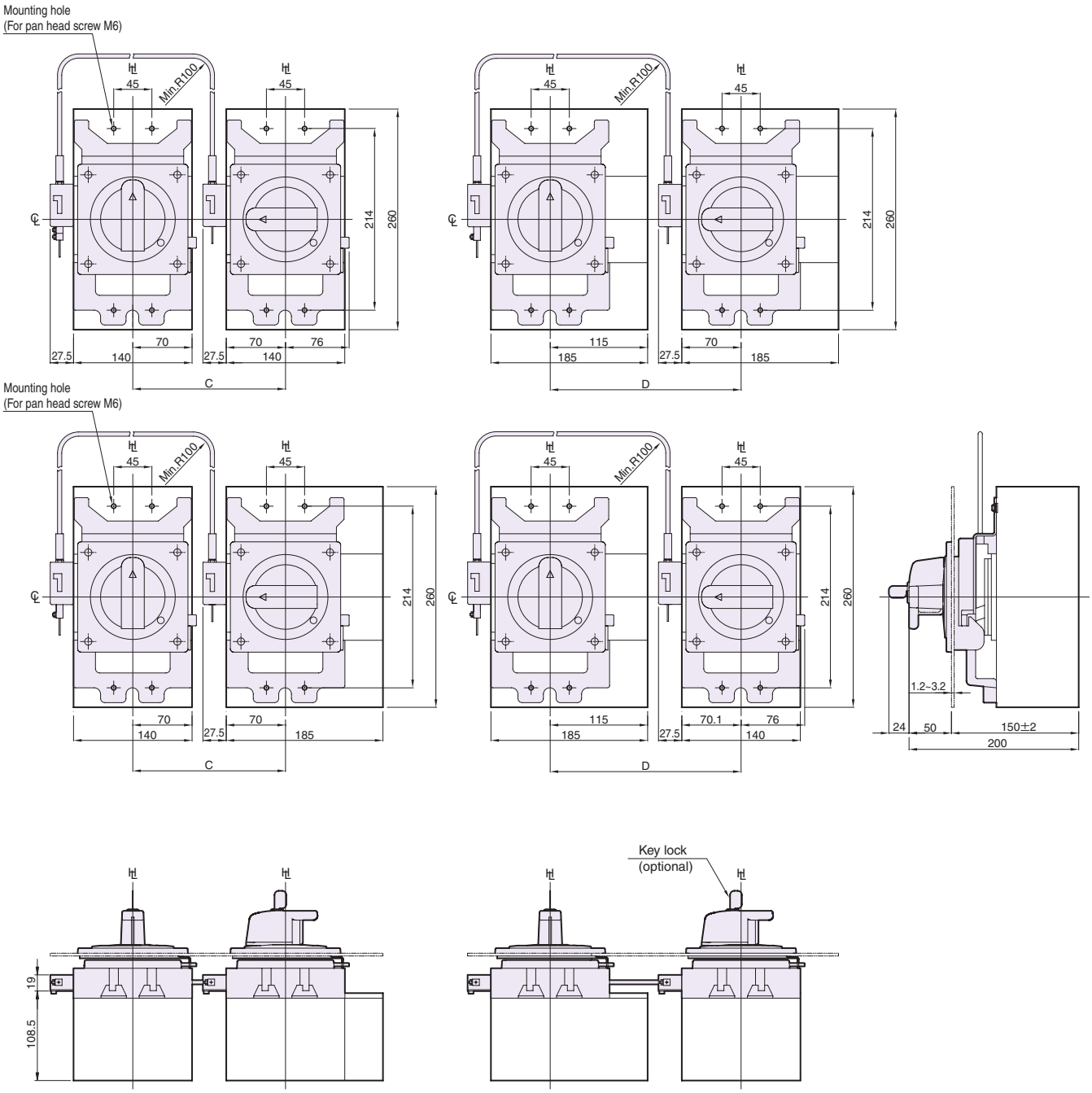

HL : Handle Frame Centre Line
℄ : Handle Centre Line

With motor operators

Dimensions, mm

Frame size (A)	Types of MCCBs	Types of ELCBs	Interlock Order codes
400	**PS400-CF/NF/GF/NN, PS400-NE/GE, PH400-CF, PH400-CE**	—	Factory-installed
600, 630	**PS630-CF/NF/GF/NN, PS630-NE/GE, PH630-CF, PH630-CE**		

Interlock wire order codes (length)	C (mm)	D (mm)
TPMW00S(1m)	180min.-430max.	225min.-430max.
TPMW00L(1.5m)	180min.-930max.	225min.-930max.

Notes:

1: The lead wire terminal block cannot be fitted to the left-hand side of the circuit breaker because it would interfere with the interlock device.

2: The 400AF to 630AF Wire interlock are only available with either the motor operator or external operating handle.

3: The interlock device is shipped installed to the breaker.

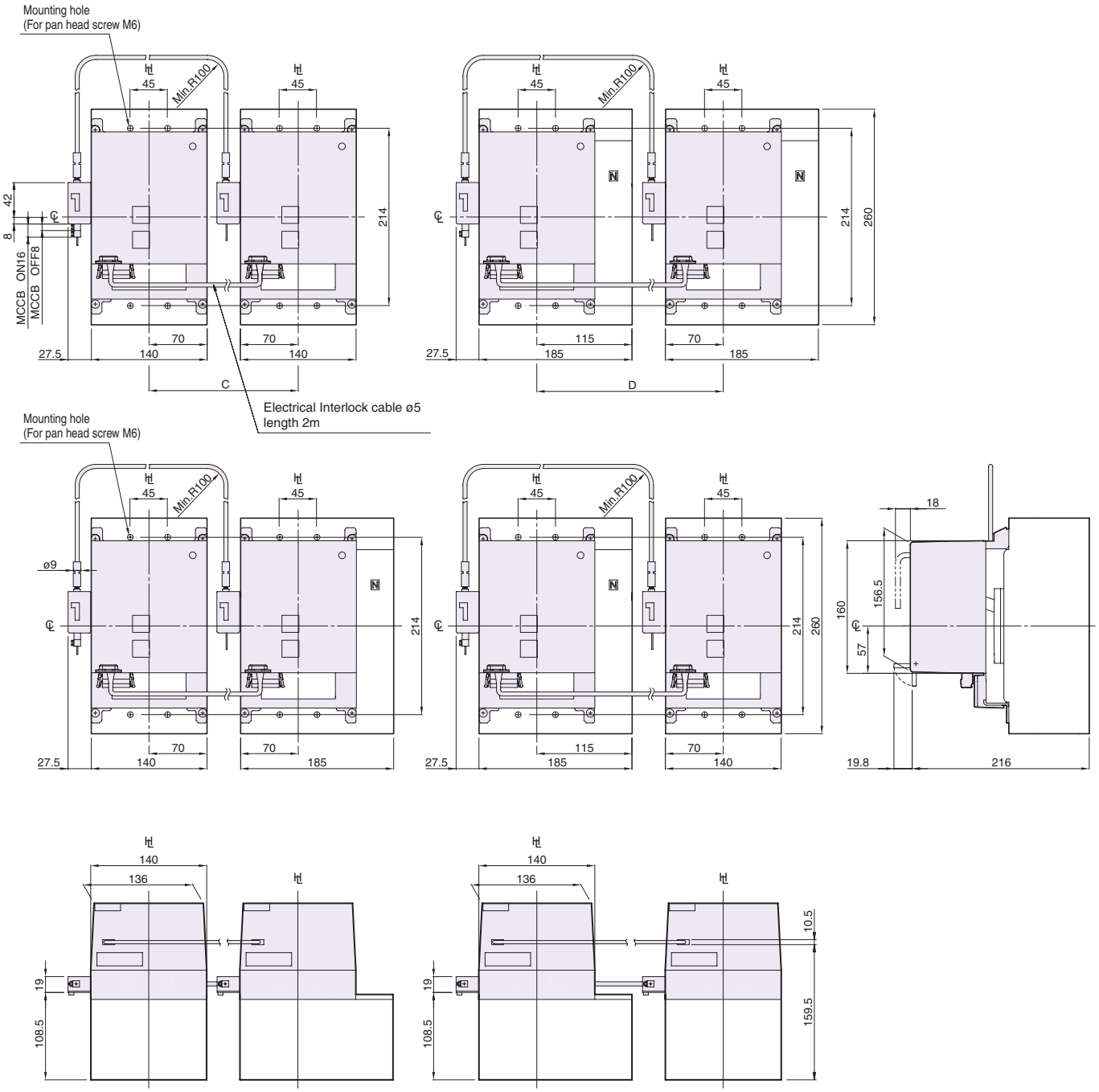

HL : Handle Frame Centre Line
℄ : Handle Centre Line

(4) Wire interlock (MW)

With external operating handle

Dimensions, mm

Frame size (A)	Types of MCCBs	Types of ELCBs	Interlock Order codes
400	**PS400-CF/NF/GF/NN, PS400-NE/GE, PH400-CF,PH400-CE**	—	Factory-installed
600, 630	**PS630-CF/NF/GF/NN, PS630-NE/GE, PH630-CF,PH630-CE**		

Interlock wire order codes (length)	C (mm)	D (mm)
TPMW00S(1m)	180min.-430max.	225min.-430max.
TPMW00L(1.5m)	180min.-930max.	225min.-930max.

Notes:
1: The lead wire terminal block cannot be fitted to the left-hand side of the circuit breaker because it would interfere with the interlock device.
2: The 400AF to 630AF Wire interlock are only available with either the motor operator or external operating handle.
3: The interlock device is shipped installed to the breaker. The external operating handle is supplied separately.

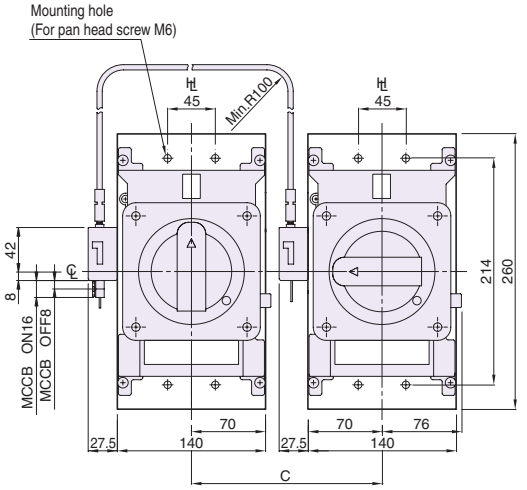

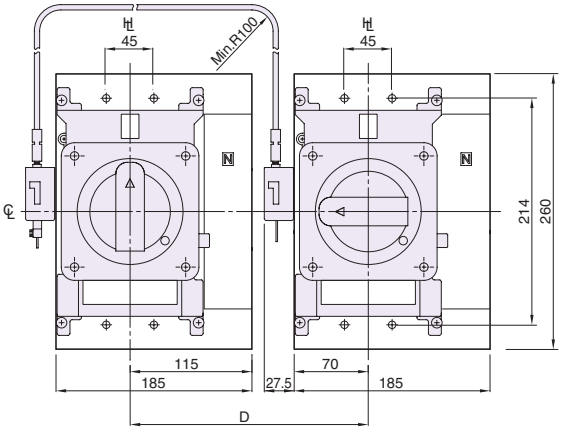

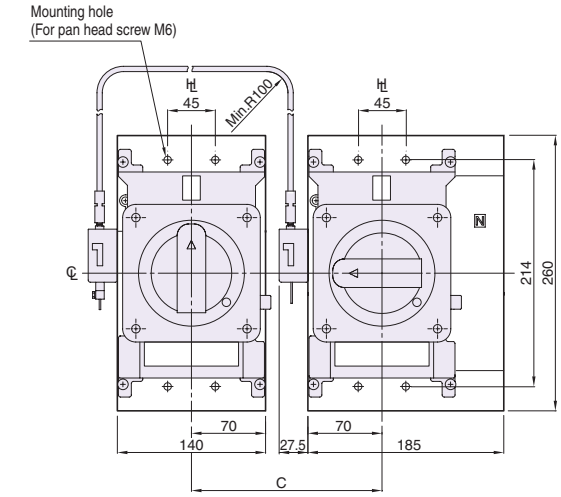

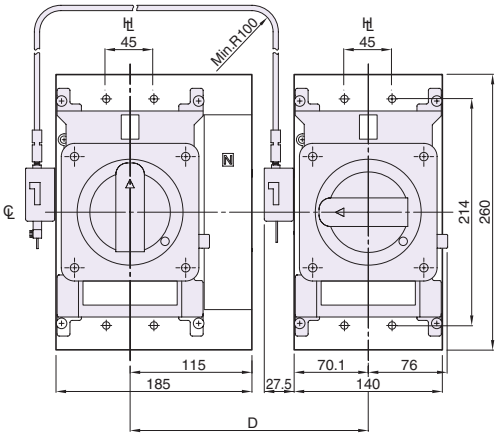

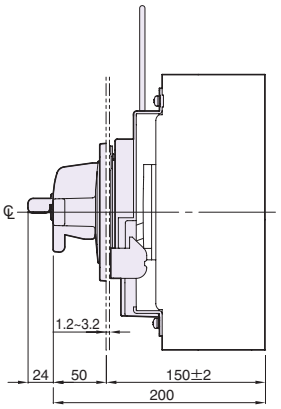

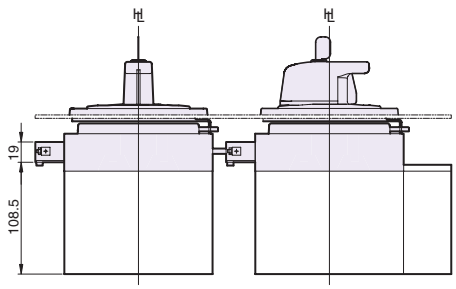

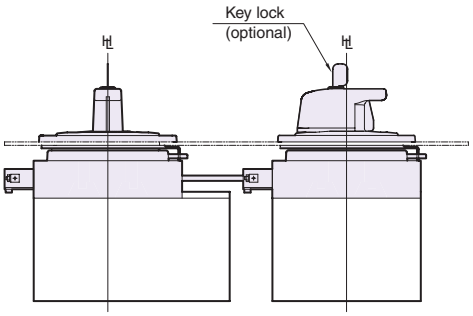

HL : Handle Frame Centre Line
℄ : Handle Centre Line

With motor operators

Dimensions, mm

Frame size (A)	Types of MCCBs	Types of ELCBs	Interlock Order codes
400	**H400-NE, L400-NE**	—	Factory-installed

Interlock wire order codes (length)	C (mm)	D (mm)
T2MW00S(1m)	180min.-430max.	225min.-430max.
T2MW00L(1.5m)	180min.-930max.	225min.-930max.

Notes:

1: The lead wire terminal block cannot be fitted to the left-hand side of the circuit breaker because it would interfere with the interlock device.

2: The 400AF Wire interlock is only available with either the motor operator or external operating handle.

3: The interlock device is shipped installed to the breaker.

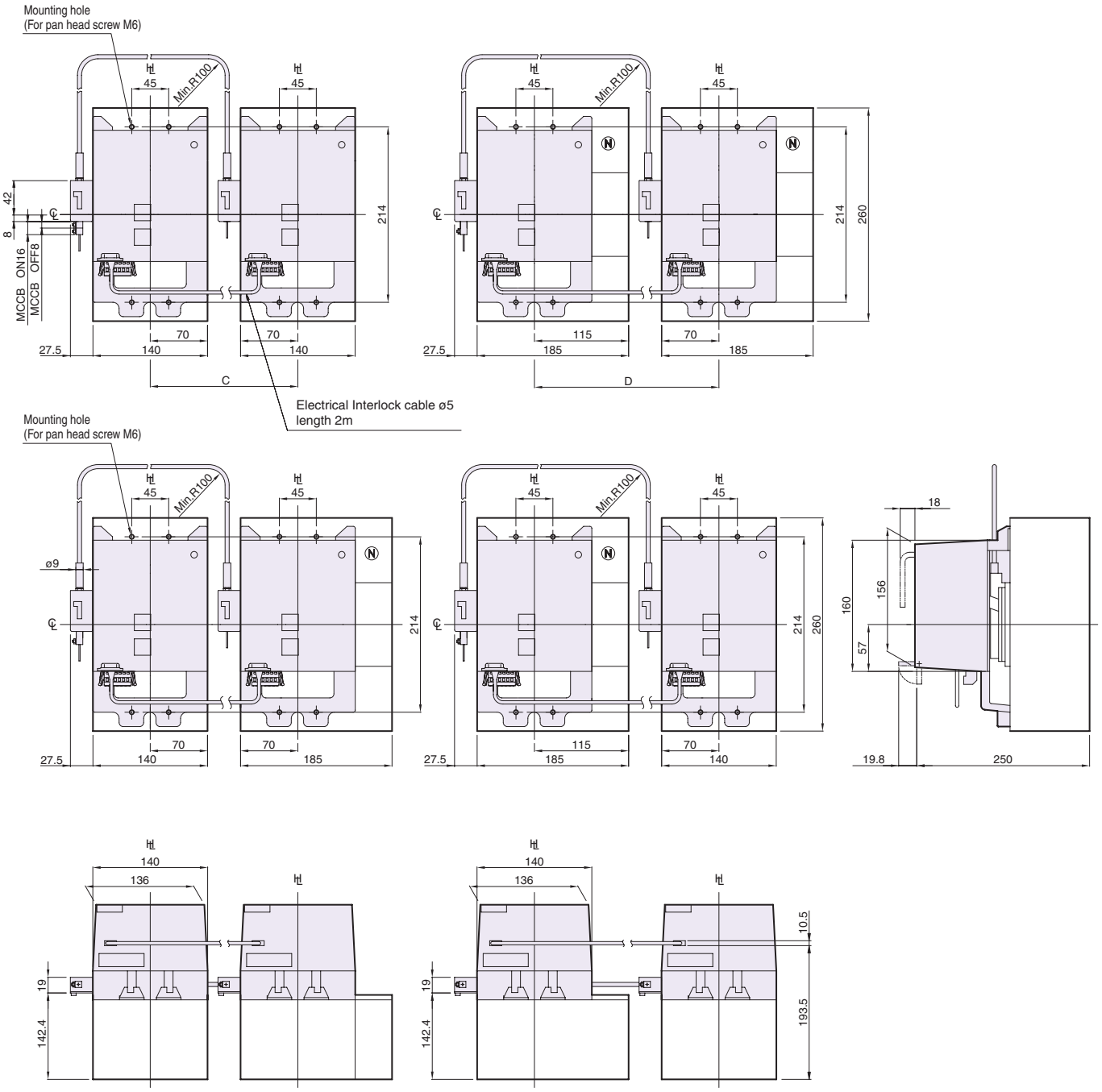

HL : Handle Frame Centre Line
℄ : Handle Centre Line

(4) Wire interlock (MW)

With external operating handle

Dimensions, mm

Frame size (A)	Types of MCCBs	Types of ELCBs	Interlock Order codes
400	**H400-NE, L400-NE**	—	Factory-installed

Interlock wire order codes (length)	C (mm)	D (mm)
T2MW00S(1m)	180min.-430max.	225min.-430max.
T2MW00L(1.5m)	180min.-930max.	225min.-930max.

Notes:
1: The lead wire terminal block cannot be fitted to the left-hand side of the circuit breaker because it would interfere with the interlock device.
2: The 400AF Wire interlock is only available with either the motor operator or external operating handle.
3: The interlock device is shipped installed to the breaker. The external operating handle is supplied separately.

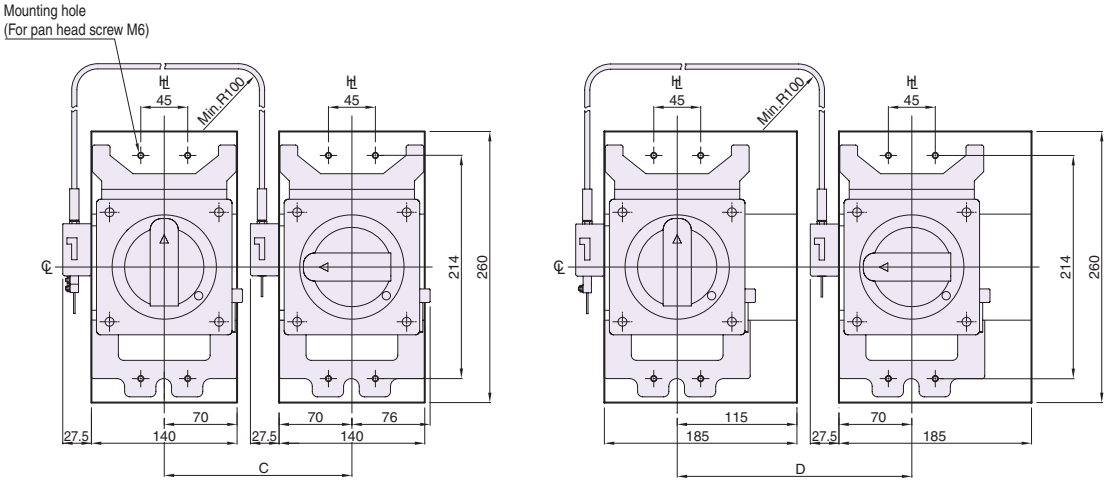

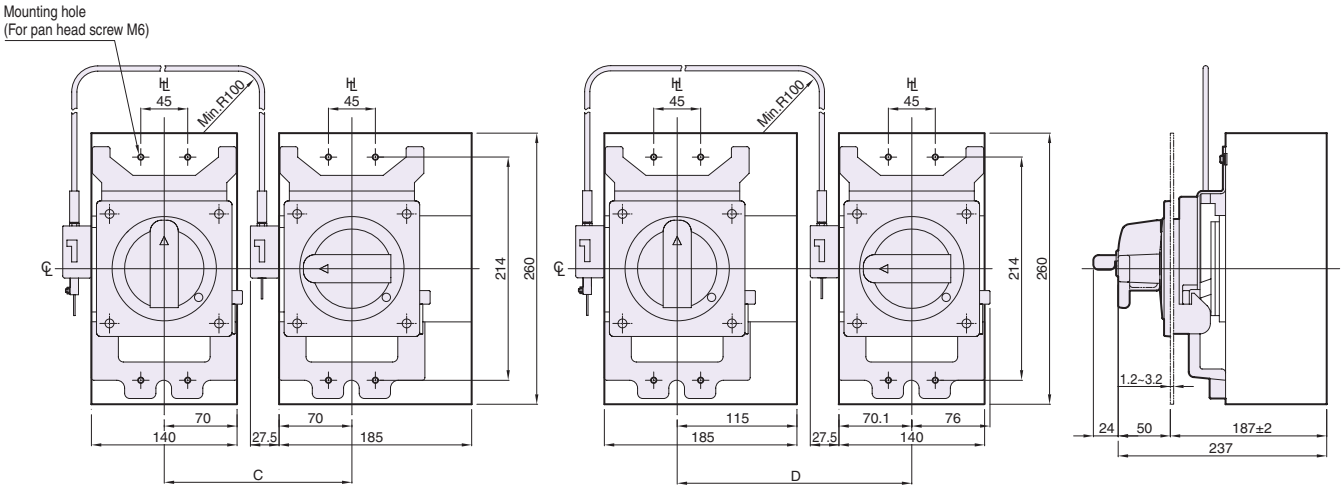

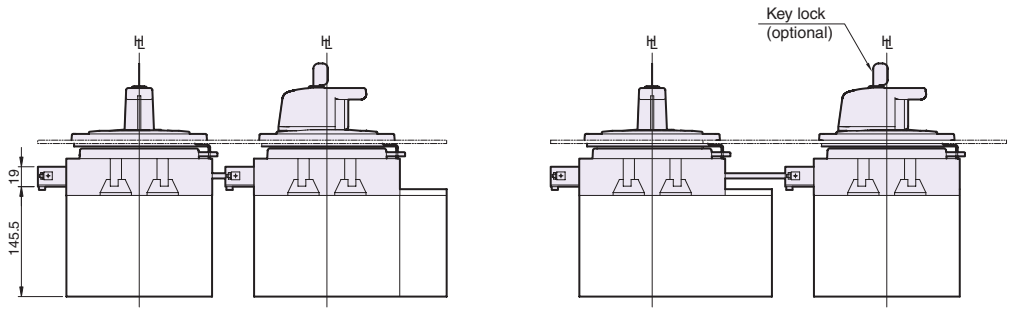

HL : Handle Frame Centre Line
℄ : Handle Centre Line

With motor operators

Dimensions, mm

Frame size (A)	Types of MCCBs	Types of ELCBs	Interlock Order codes	A (mm)	B (mm)	C (mm)
600, 630, 800, 1000	**S630-CF/NF/NE/GN, S800-CF/NF/NE/RF/RE/PF/PE/NN, S1000-CE/NN**	—	Factory-installed	213	124.5	156.5
	H630-NE, H800-NE, L630-NE, L800-NE	—	Factory-installed	250	161.5	193.5

Interlock wire order codes (length)	D (mm)	E (mm)
T2MW00S(1m)	250min.-430max.	320min.-430max.
T2MW00L(1.5m)	250min.-930max.	320min.-930max.

Notes:

1: The 630AF to 1000AF Wire interlock are only available with either the motor operator or external operating handle.

2: The interlock device is shipped installed to the breaker.

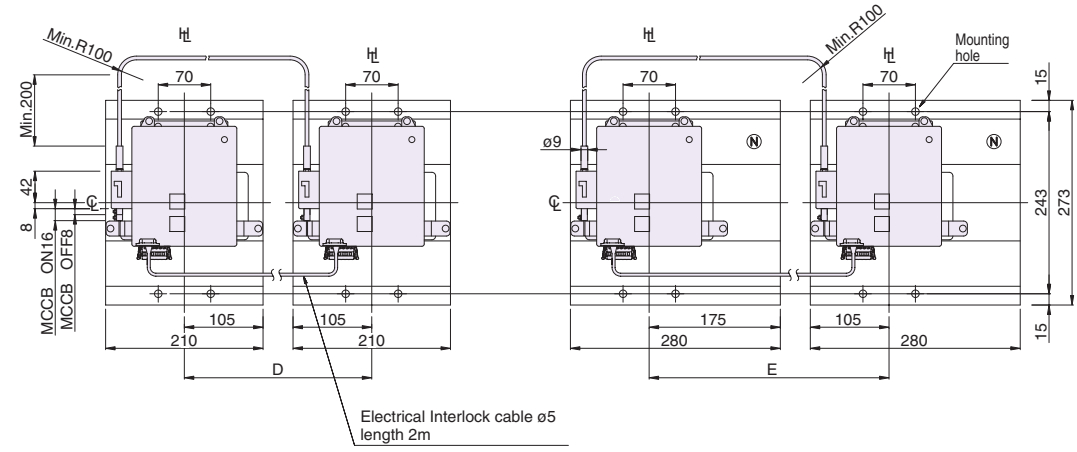

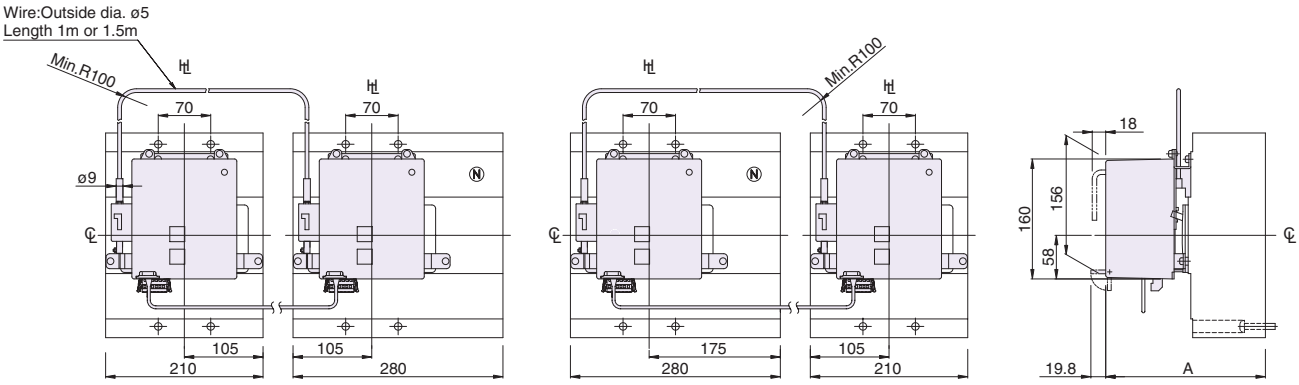

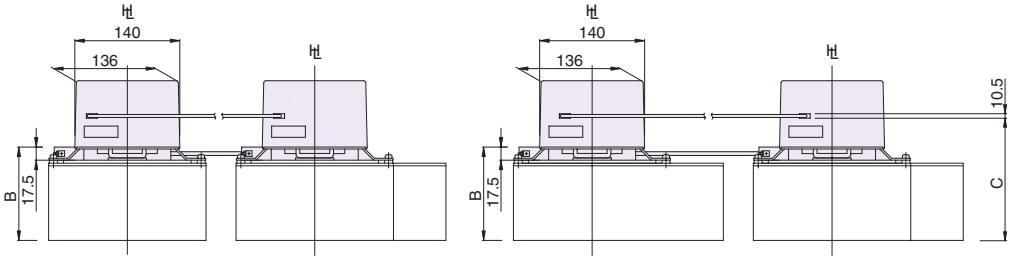

HL : Handle Frame Centre Line
℄ : Handle Centre Line

(4) Wire interlock (MW)

With external operating handle

Dimensions, mm

Frame size (A)	Types of MCCBs	Types of ELCBs	Interlock Order codes	A (mm)	B (mm)
600, 630, 800, 1000	**S630-CF/NF/NE/GN, S800-CF/NF/NE/RF/RE/PF/PE/NN, S1000-CE/NN**	—	Factory-installed	200	150±2
	H630-NE, H800-NE, L630-NE, L800-NE	—	Factory-installed	237	187±2

Interlock wire order codes (length)	C (mm)	D (mm)
T2MW00S(1m)	250min.-430max.	320min.-430max.
T2MW00L(1.5m)	250min.-930max.	320min.-930max.

Notes:
1: The 630AF to 1000AF Wire interlock are only available with either the motor operator or external operating handle.
2: The interlock device is shipped installed to the breaker. The external operating handle is supplied separately.

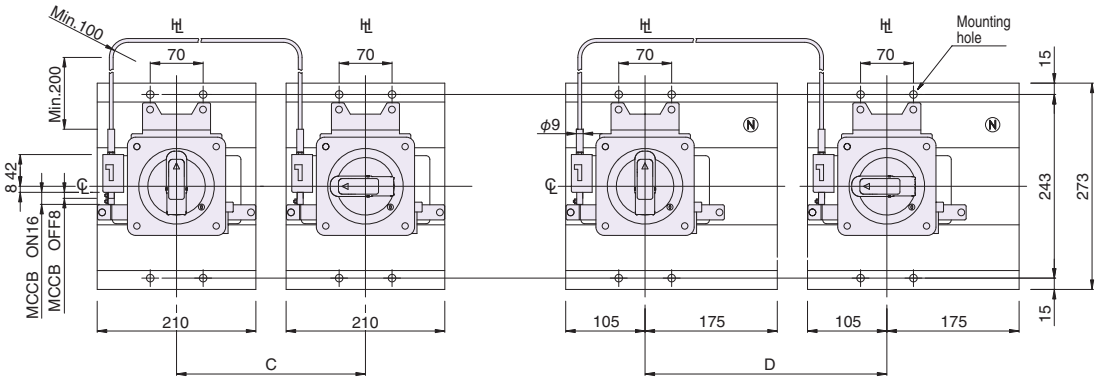

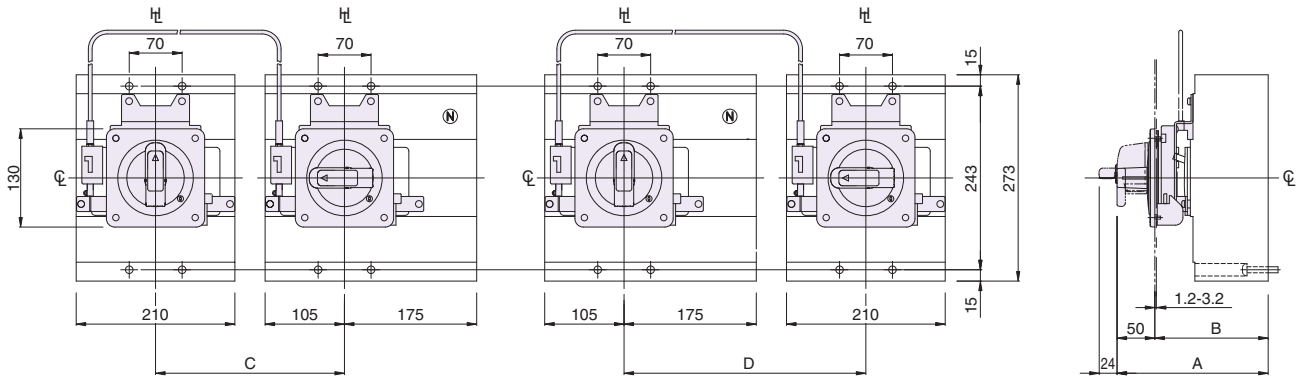

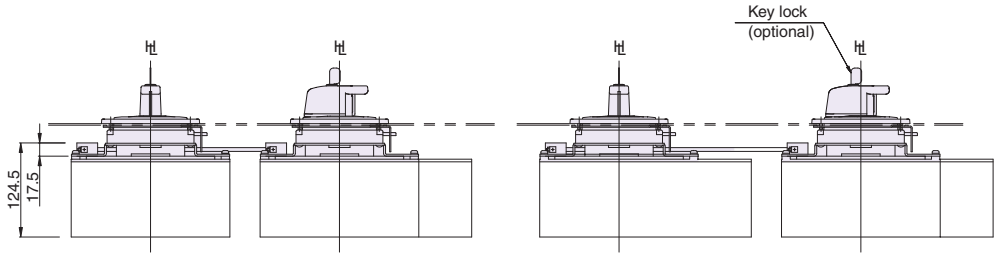

ASL : Arrangement Standard Line
HL : Handle Frame Centre Line

Dimensions, mm

Frame size (A)	Types of MCCBs	Types of ELCBs	Interlock Order codes
1250	**S1250-NE/GE/NN**	—	Factory-installed

Interlock wire order codes (length)	P (mm)	L (mm)
1m	650-500-350	450-500-530 ±30
1.5m	1000-900-750	550-600-700 ±30

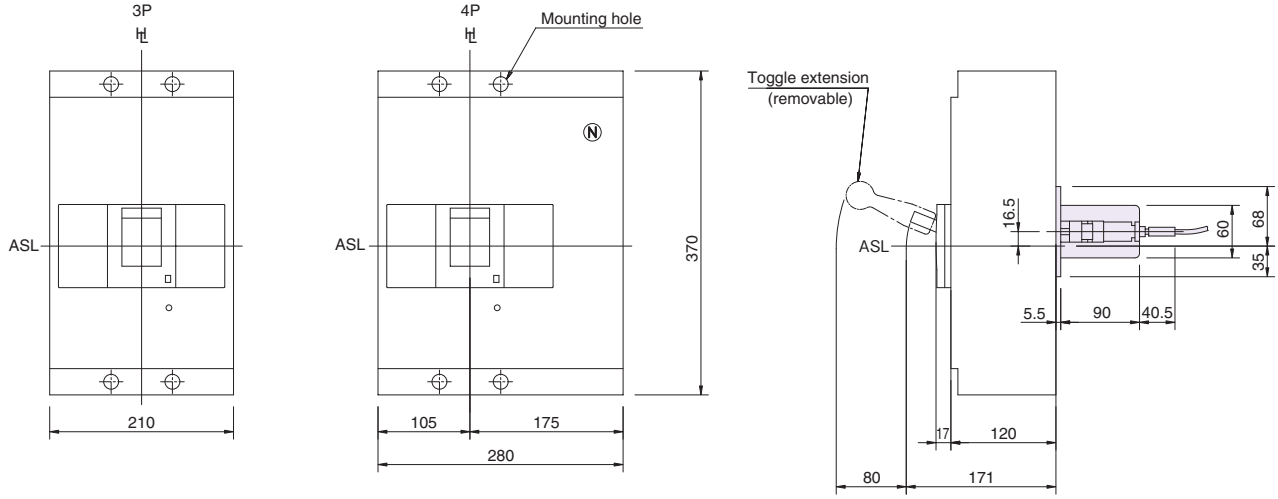

Vertical installation

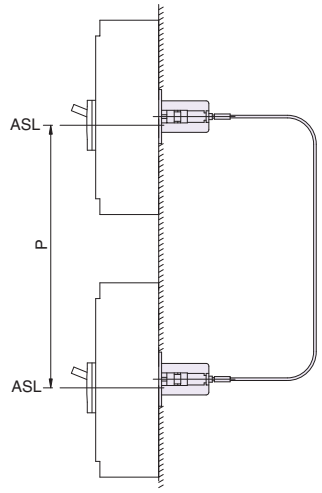

Drilling plan

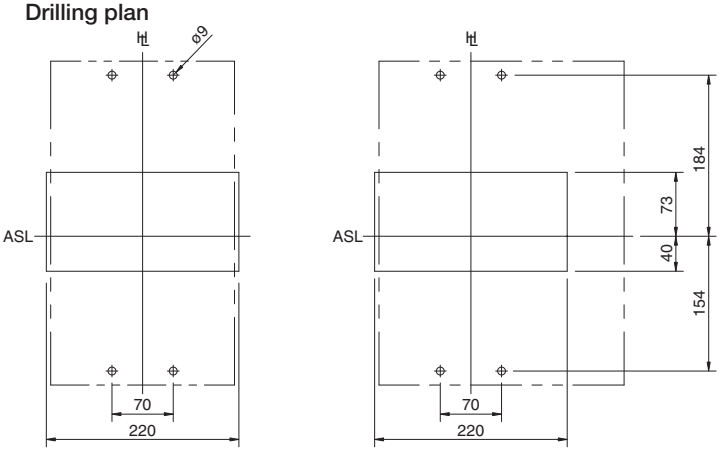

Horizontal installation

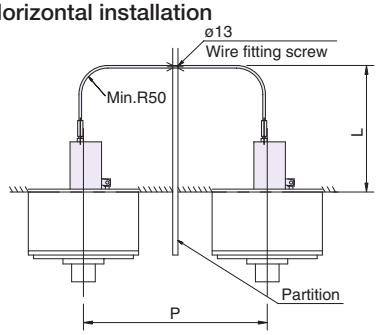

ASL : Arrangement Standard Line
⊬ : Handle Frame Centre Line

(4) Wire interlock (MW)

Dimensions, mm

Frame size (A)	Types of MCCBs	Types of ELCBs	Interlock Order codes
1600	**S1600-NE/NN**	—	Factory-installed

Interlock wire order codes (length)	P (mm)	L (mm)
1m	650-500-350	450-500-530 ±30
1.5m	1000-900-750	550-600-700 ±30

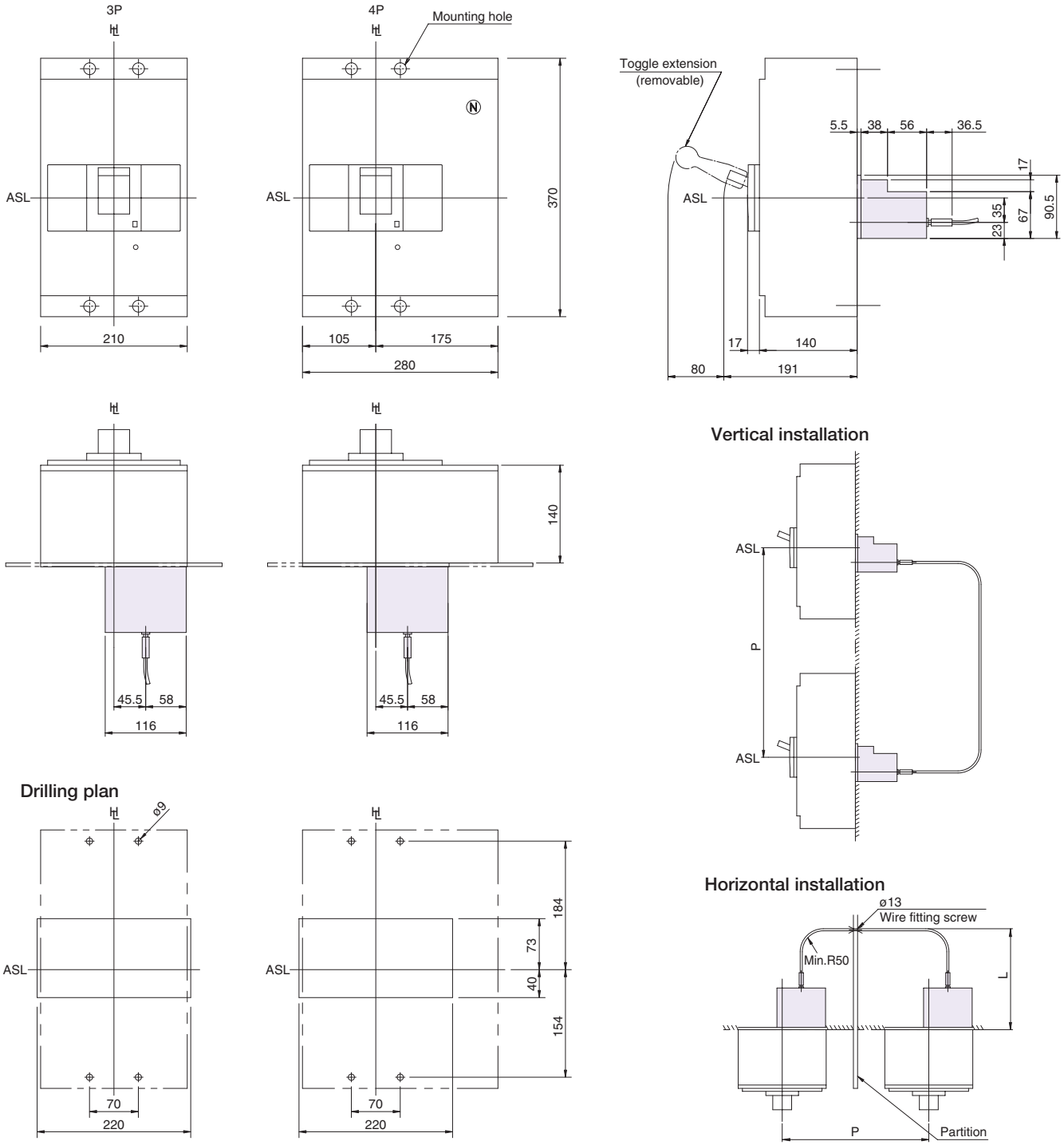

6. Toggle holder (HH) and toggle lock (HL)

Toggle holder (HH)

Simply fitting the toggle holder onto the breaker toggle disables breaker operation without using padlocks.

Toggle lock (HL)

The toggle lock is a tool that locks the breaker ON or OFF. When an overcurrent occurs, the breaker will trip even if the breaker toggle is locked in the ON position. (Use commercially available padlocks).

Toggle holders/toggle locks

Frame size (A)	Type of breaker		Toggle holder		Figure	Toggle lock		Figure
	MCCB	ELCB	Order codes	Marking codes		Order codes	Marking codes	
30, 50, 60, 100	**E30-NM, S30-NM, E50-NM, S50-NM, E100-NM**	**ZE30-NM, ZS30-NM, ZE50-NM, ZS50-CM, ZE100-NM**	T2HL05 ①	BZ6L10C	—	T2HL05	BZ6L10C	3
	PE30-NF/NN, PS30-NF, PE50-NF/NN/NFZ/NFN, PS50-NF/NFZ, PE60-NF, PS60-NF, PE125-NF/NN/NFZ/NFN	**PZE30-NF, PZS30-NF, PZE50-NF/NFN, PZS50-NF, PZE60-NF, PZS60-NF, PZE125-NF/NFN**	TPHH12K	—	10	TPHL12K	—	11
50, 100, 125, 225, 250	**S50-SF, S125-SF, S125-SN, ZAS125-SF, NS125-SF, E250-SF, S250-SF, S250-SM/SN, ZAE250-SF, ZAS250-SF, NE250-SF, NS250-SF NAE125-SF, NAS125-SF, NAE250-SF, NAS250-SF**	**ZS50-SF, ZS125-SF, ZS100-SM, ZNS125-SF, ZE250-SF, ZS250-SF/SM, ZNE250-SF, ZNS250-SF**	T2HH25L	T2HH25L	1A	T2HL25L	T2HL25L	2
	PS50-PF, PS125-NF/PF/NN, PS125-NE/PE	—						
	PS250-PF/NN, PS250-NE/PE	—						
	S100-GF, S125-GF, ZAS50-GF, ZAS100-GF, ZAS125-GF, H100-NF, H125-NF, H225-NF/NE, H250-NF, L100-NF, L125-NF, L225-NF, L250-NF, ZAS225-GF, ZAS250-GF	**ZS100-GF, ZS125-GF, ZS225-GF, ZS250-GF**	T2HH25	T2HH25	1B	T2HL25	T2HL25	2
400, 600, 630, 800, 1000	**PS400-CF/NF/GF/NN, PS400-NE/GE, PH400-CF, PH400-CE, PS630-CF/NF/GF/NN, PS630-NE/GE, PH630-CF, PH630-CE**	—	TPHL63S ①	TPHL63S	12	TPHL63S	TPHL63S	12
	E400-NF, H400-NE, L400-NE, ZAE400-NF, ZAS400-NF/GF, NAE400-NF, NAS400-NF, NE400-NF, NS400-NF, NS630-NF, NS800-NF, S630-CF/NF/NE/GN, ZAS630-CF/NF, H630-NE, L630-NE, S800-CF/NF/RF/PF/NN, ZAS800-CF/NF, S800-NE/RE/PE, H800-NE, L800-NE, S1000-CE/NN	**ZE400-NF, ZS400-NF/GF, ZNE400-NF, ZNS400-NF, ZS630-CF, ZS630-NF, ZS800-CF, ZS800-NF**	T2HL40 ①	T2HL40	4	T2HL40	T2HL40	4
1000, 1200	**TL-1000NE, TL-1200NE**	—	XKC9 ①	XKC9	7 (ℓ=86)	XKC9	XKC9	7 (ℓ=86)
1250, 1600	**S1250-NE/GE/NN, S1600-NE/NN**	—	T2HLX 6 ①	XKC9	7 (ℓ=86)	T2HLX6	XKC9	7 (ℓ=86)
For distribution boards	**TB-5S, TB-10S, TB-5P, TB-5D**	—	1P…TKB-50SGH (TAA-5CR) ③	1P…TKB-50SGH (TAA-5CR) ③	9(a)	TKB-50SG	TKB-50SG	13
			2P…TAA-52SH 3P…TAA-53SH	2P…TAA-52SH 3P…TAA-53SH	9(b)	—	—	—
	TB-51C, TB-52C	**TZ-51C, TZ52C**	LCBH1R (HC1R) ③	LCBH1R (HC1R) ③	9(c)	—	—	—
	TB50KSL, TB50KSZ, TB100KSZ	**TZ30EC, TZ50EE, TZ100EC**	BC30308041	BC30308041	8	—	—	—

Notes:

①: Same as toggle lock.

②: A hole must be drilled in the breaker toggle. Please state “with toggle lock (HL)” when ordering the breaker.

③: Order codes shown in parentheses “( )” are toggle caps. The colour is Red.

3 Externally mounted accessories

Fig. 1A

Red

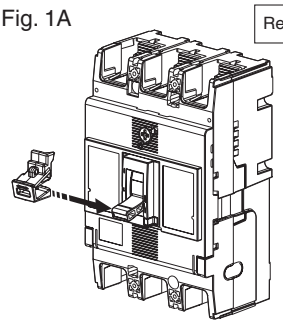

Fig. 1B

Red

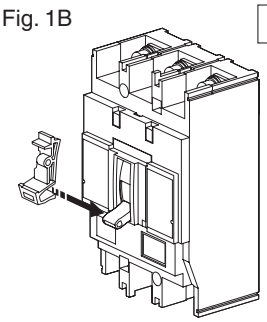

Fig. 2

Red

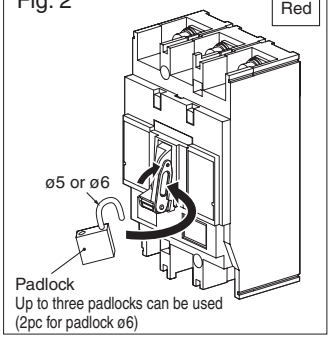

Fig. 3

Red

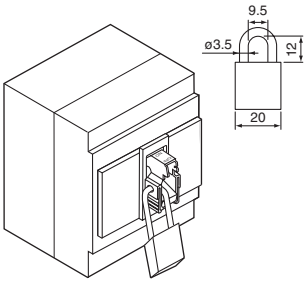

Fig. 4

Red

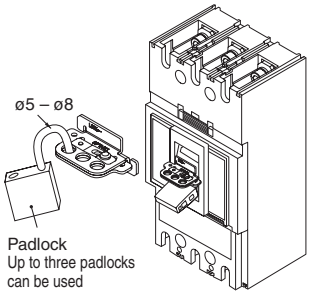

Fig. 7

Black

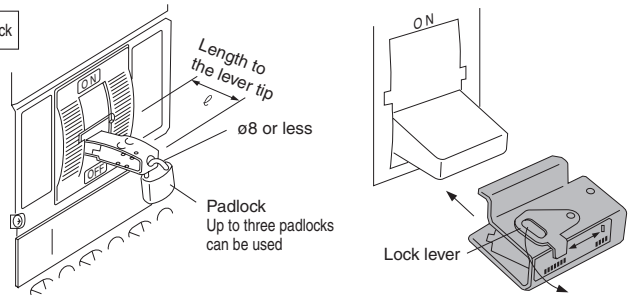

Toggle holder (HH):
Make sure the lock lever of the toggle holder is in the UNLOCK position, fit the toggle holder onto the toggle and swing the lock lever to the LOCK position. The toggle is now locked ON or OFF.

Toggle lock (HL):
Padlock the toggle in the ON or OFF position.

Fig. 8

Red

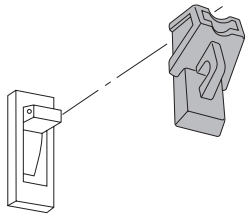

Fig. 9

Red

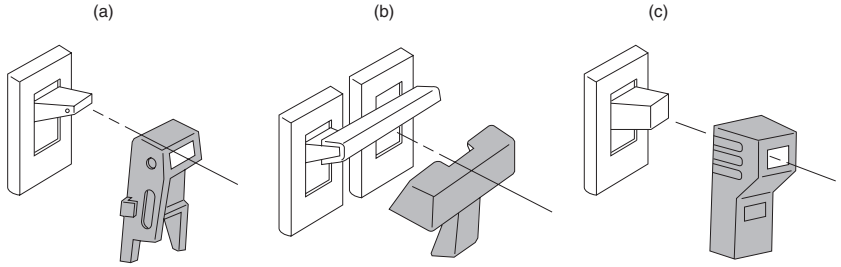

Fig. 10

Red

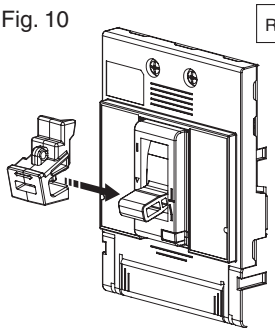

Fig. 11

Red

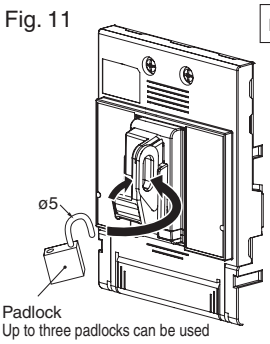

Fig. 12

Red

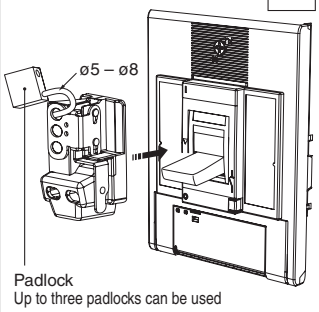

Fig. 13

Red

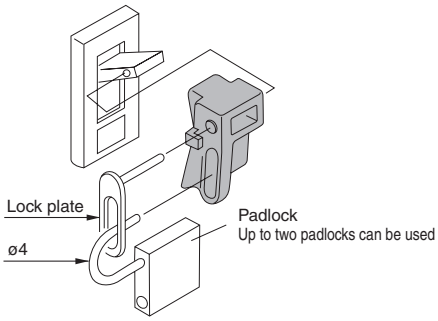

7. Terminal covers

Terminal covers prevent live parts of the circuit breaker from being exposed to the external environment. There are three types of terminal covers: front-connected type, rear-connected and plug-in type, and cable clamps type. Select appropriate terminal covers depending on the type and application of the breaker.

(1) CF for front-connected breakers

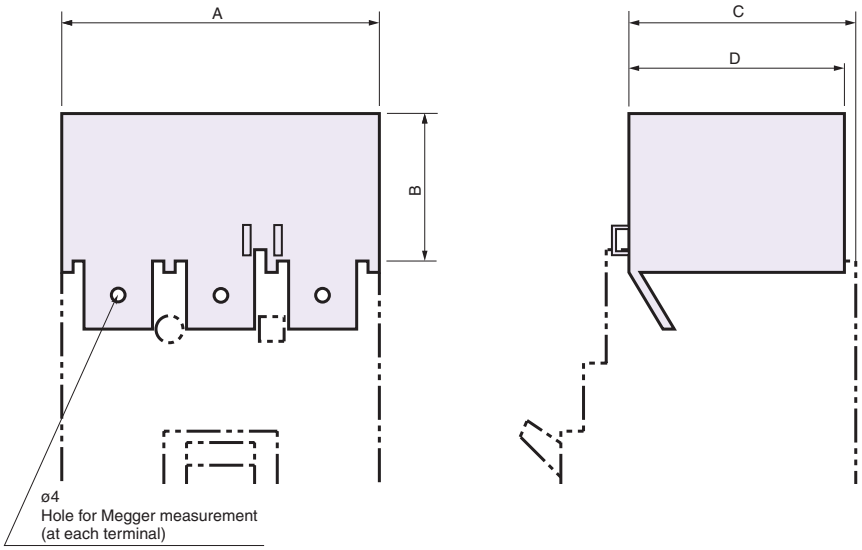

Plug-in mounted version

This version can be mounted simply by being plugged in the breaker body.

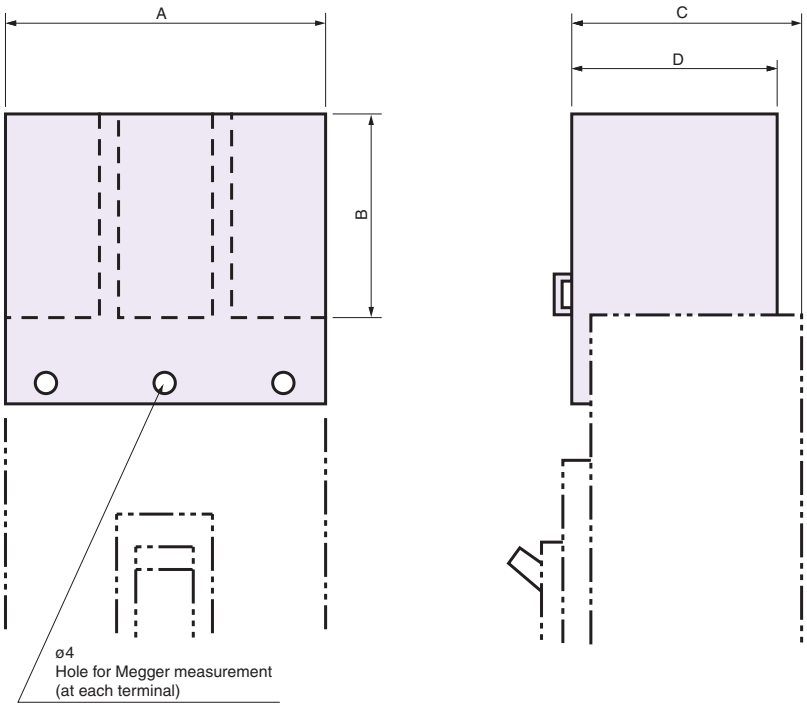

Screw-mounted version

The terminal covers for 630 to 1000AF (except PS630 and PH630) are mounted to the breaker covers using tapping screws.
The terminal cover for 1250AF is mounted to insert nuts of the circuit breaker cover using screws. The insert nuts do not come standard with the circuit breaker. Please be sure to state “with terminal cover (CF)” when ordering the circuit breaker.

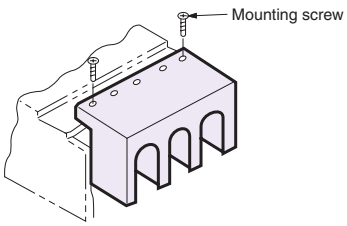

■ To be stated when ordering
- Please state the order codes on the next page if ordering separately from the breaker.
- For the terminal cover for 1250AF, please order with the breakers.

7. Terminal covers

(1) CF for front-connected breakers

Dimensions, mm

Frame size (A)	Types of MCCBs ①	Types of ELCBs ①	Terminal cover				A			B		C ⑦		D ⑦		Colour of cover P: Grey Blue G: Light grey G': Grey C': Transparent	Mounting version	
			Size	Note:	Order codes ②	Marking codes	2 poles	3 poles	4 poles	2, 3 poles	4 poles	2, 3 poles	4 poles	2,3 poles	4 poles		Plug-in mounted	Screw-mounted
30, 50, 60, 100, 125	E30-NM, S30-NM, E50-NM, S50-NM, E100-NM	ZE30-NM, ZS30-NM, ZE50-NM, ZS50-CM, ZE100-NM	Large	⑧	T2CF05∗NLNG	—	—	75	—	40	—	53	—	53	—	G	○	—
					T2CF05∗NLNC											C'		
			Small	⑧	T2CF05∗NSNG	—	—	75	—	10	—	53	—	53	—	G		
					T2CF05∗NSNC											C'		
	PS50-PF, PS125-NF/NE, PS125-PF/PE, PS125-NN	—	Large		TPCF16∗SLNPB	TPCF16∗SL	60	90	120	40	40	60.5	60.5	58.5	58.5	P	○	—
					TPCF16∗SLNCB											C'		
			Small		TPCF16∗SSNPB	TPCF16∗SS	60	90	120	20	20	60.5	60.5	58.5	58.5	P		
					TPCF16∗SSNCB											C'		
	PE30-NF/NN, PS30-NF, PE50-NF/NN/NFZ/NFN, PS50-NF/NFZ, PE60-NF, PS60-NF, PE125-NF/NN/NFZ/NFN	PZE30-NF, PZS30-NF, PZE50-NF/NFN, PZS50-NF, PZE60-NF, PZS60-NF, PZE125-NF/NFN	Large		TPCF12∗KLNPB	TPCF12∗KL	50	75	—	50	—	60.7	—	60	—	P	○	—
					TPCF12∗KLNCB											C'		
			Small		TPCF12∗KSNPB	TPCF12∗KS	50	75	—	25	—	60.7	—	60	—	P		
					TPCF12∗KSNCB											C'		
	S50-SF, S125-SF/SN, ZAS125-SF, NAE125-SF, NAS125-SF, NS125-SF	ZS50-SF, ZS100-SM, ZS125-SF, ZNS125-SF	Large		TPCF12∗KLNPB	TPCF12∗KL	50	75	100	50	50	60.7	60.7	60	60	P	○	—
					TPCF12∗KLNCB											C'		
			Small		TPCF12∗KSNPB	TPCF12∗KS	50	75	100	25	25	60.7	60.7	60	60	P		
					TPCF12∗KSNCB											C'		
	S100-GF, S125-GF, ZAS50-GF, ZAS100-GF, ZAS125-GF	ZS100-GF, ZS125-GF	Large		T2CF12∗SLNP	T2CF12∗SL	60	90	120	40	40	48	48	46	46	P	○	—
					T2CF12∗SLNC											C'		
			Small		T2CF12∗SSNP	T2CF12∗SS	60	90	120	22	22	48	48	47	47	P		
					T2CF12∗SSNC											C'		
	H100-NF, H125-NF, L100-NF, L125-NF	—	Large	③	T2CF25∗LLNP	T2CF25∗LL	—	105	140	55	55	89	89	87	87	P	○	—
					T2CF25∗LLNC											C'		
100, 125, 225, 250	E250-SF, S250-SF, S250-SM/SN, ZAE250-SF, ZAS250-SF, NAE250-SF, NAS250-SF, NE250-SF, NS250-SF, PS250-NE/PF/PE/NN	ZE250-SF, ZS250-SF/SM, ZNE250-SF, ZNS250-SF	Small	⑩	T2CF25L∗SSNP	T2CF25L∗SS	105	105	140	29	29	59	59	57.5	57.5	P	○	—
					T2CF25L∗SSNC											C'		
			Large	④, ⑩	T2CF25L∗SWNP	T2CF25L∗SW	147.5	147.5	196	55	55	59	59	57.5	57.5	P	○	—
					T2CF25L∗SWNC											C'		
			Large	⑩	T2CF25L∗SLNP	T2CF25L∗SL	105	105	140	55	55	59	59	57.5	57.5	P	○	—
					T2CF25L∗SLNC											C'		
	ZAS225-GF, ZAS250-GF	ZS225-GF, ZS250-GF	Large	③, ⑩	T2CF25∗SLNP	T2CF25∗SL	—	105	140	55	55	54	54	52	52	P	○	—
					T2CF25∗SLNC											C'		
			Small	③, ⑩	T2CF25∗SSNP	T2CF25∗SS	—	105	140	29	29	54	54	53.5	53.5	P	○	—
					T2CF25∗SSNC											C'		
	H225-NF/NE, H250-NF, L225-NF, L250-NF	—	Large	③, ⑩	T2CF25∗LLNP	T2CF25∗LL	—	105	140	55	55	89	89	87	87	P	○	—
					T2CF25∗LLNC											C'		
400, 600, 630	E400-NF, ZAE400-NF, ZAS400-NF/GF, NAE400-NF, NAS400-NF, NE400-NF, NS400-NF	ZNE400-NF, ZNS400-NF, ZE400-NF, ZS400-NF/GF	Large	④	T2CF40∗SWNP	T2CF40∗SW	—	180	240	110	114	97	98	94.5	98	P	○	—
					T2CF40∗SWNC											C'		
			Large	⑤	T2CF40∗SLNP	T2CF40∗SL	—	140	185	85	85	97	97	94.5	94.5	P	○	—
					T2CF40∗SLNC											C'		
	PS400-CF/NF/NE/GF/GE/NN, PH400-CF/CE, PS630-CF/NF/NE/GF/GE/NN, PH630-CF/CE	—	Large	④, ⑫	TPCF63∗SWNPB	TPCF63∗SW	—	180	240	110	110	97	97	95.5	95.5	P	○	—
					TPCF63∗SWNCB											C'		
			Large	⑤	TPCF63∗SLNPB	TPCF63∗SL	—	140	185	85	85	97	97	95.5	95.5	P	○	—
					TPCF63∗SLNCB											C'		
	S630-CF/NF/NE/GN, ZAS630-CF/NF, NS630-NF	ZS630-CF/NF	Large		T2CF80∗SLNP	TPR-5BA	—	215	285	130	130	99.5 (102)	99.5 (102)	99 (101.5)	99 (101.5)	P	—	○
					T2CF80∗SLNC											C'		
	H400-NE, L400-NE	—	Large	④, ⑥	T2CF40∗SWNP	T2CF40∗SW	—	180	240	110	114	134	135	94.5	98	P	○	—
					T2CF40∗SWNC											C'		
			Large	⑤, ⑥	T2CF40∗SLNP	T2CF40∗SL	—	140	185	85	85	134	134	94.5	94.5	P	○	—
					T2CF40∗SLNC											C'		
	H630-NE, L630-NE	—	Large	⑥	T2CF80∗SLNP	TPR-5BA	—	215	285	130	130	136.5 (139)	136.5 (139)	99 (101.5)	99 (101.5)	P	—	○
					T2CF80∗SLNC											C'		
800	S800-CF/NF/NE/RF/RE/PF/PE/NN, NS800-NF, ZAS800-CF/NF	ZS800-CF/NF	Large		T2CF80∗SLNP	TPR-5BA	—	215	285	130	130	99.5 (102)	99.5 (102)	99 (101.5)	99 (101.5)	P	—	○
					T2CF80∗SLNC											C'		
	H800-NE, L800-NE	—	Large	⑥	T2CF80∗SLNP	TPR-5BA	—	215	285	130	130	136.5 (139)	136.5 (139)	99 (101.5)	99 (101.5)	P	—	○
					T2CF80∗SLNC											C'		
1000	S1000-CE/NN	—	Large		T2CF80∗SLNP	TPR-5BA	—	215	285	130	130	99.5 (102)	99.5 (102)	99 (101.5)	99 (101.5)	P	—	○
					T2CF80∗SLNC											C'		
1250	S1250-NE/GE/NN	—	Large	⑨	—	TPR-5BA	—	215	285	130	130	115	115	99 (102.5)	99 (102.5)	P	—	○
																C'		
For distribution boards and control boards	TB50KSL ⑪	TZ30EC, TZ50EE	Large		BCW20508033	—	50	—	—	23.5	—	52	—	—	—	G'	○	—
					BCW30508033	—	—	75	—	23.5	—	52	—	—	—	G'		
			Small		BCW20508125	—	50	—	—	5	—	52	—	—	—	C'	○	—
					BCW30508125	—	—	75	—	5	—	52	—	—	—	C'		
	TB50KSZ, TB100KSZ	TZ100EC	Large		BCW30508033	—	—	75	—	23.5	—	52	—	—	—	G'	○	—
			Small		BCW30508125	—	—	75	—	5	—	52	—	—	—	C'		

Notes:

①: Some models are not available for 2-pole or 4-pole products. See the circuit breaker outline drawing in Chapter 7 for details.

②: The asterisk indicates the number of poles. Please state the number of poles at the asterisk position when ordering. One set includes 2 pcs for T2CF/TPCF, 1 pc for BCW.

③: Not applicable to 3-pole breakers with extension bars.

④: Applicable to 3-pole breakers with spread extension bars.

⑤: When used without the extension bars.

⑥: There will be an approx. 40 mm gap between the bottom of the terminal cover and the breaker mounting surface.

⑦: Values in parentheses indicate the distance to the head of terminal cover mounting screws.

⑧: There is no hole for Megger measurement.

⑨: Not sold as a single unit. When ordering the circuit breaker, please specify whether you require a grey-blue terminal cover or a transparent terminal cover.

⑩: Please use with a connection wire of 100mm² or less. If you use 150mm², the insulating sleeve will touch the terminal cover and cannot be attached.

⑪: Only for 2-pole products.

⑫: Please use with a connection wire of 200mm² or less. If you use 325mm², the insulating sleeve will touch the terminal cover and cannot be attached.

(2) CR for rear-connected and plug-in breakers

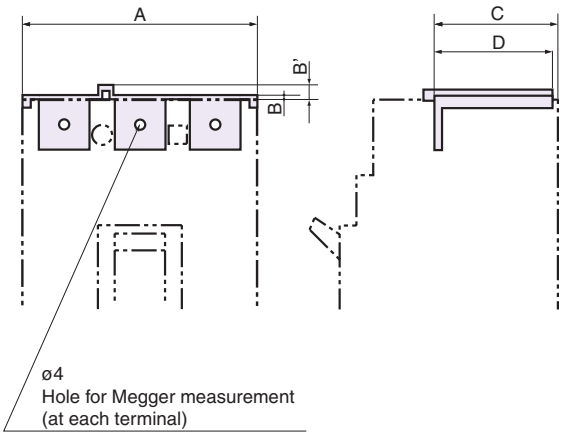

Fig. 1

Plug-in mounted version

This version can be mounted simply by being plugged in the breaker body.

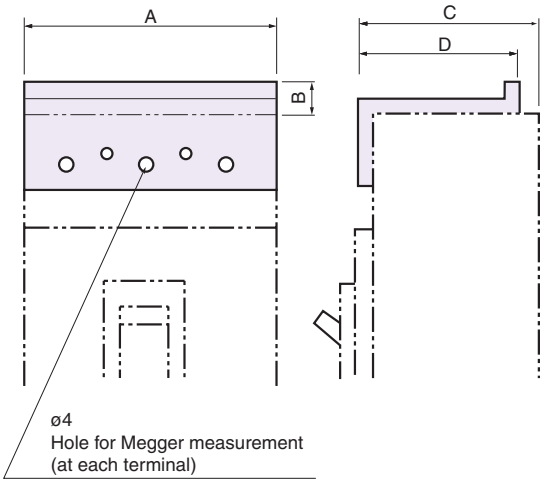

Fig. 2

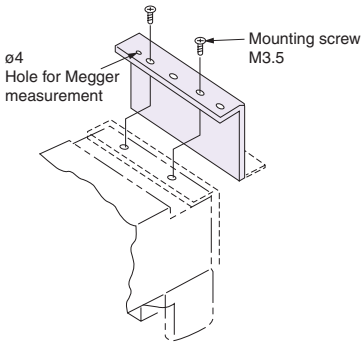

Screw-mounted version

The terminal covers are mounted to the breakers using tapping screws.

■ **To be stated when ordering**

- Please state “with CR” if ordering along with the breaker.
- Please state the order codes on the next page if ordering separately from the breaker.
  One set includes one terminal cover for the ON side and one for the OFF side.

7. Terminal covers

(2) CR for rear-connected and plug-in breakers

Dimensions, mm

Frame size (A)	Types of MCCBs ①	Types of ELCBs ①	Order codes ②	Marking codes	A			B		B'	C ④		D ④		Colour of cover B: Black P: Grey Blue	Mounting version		
					2 poles	3 poles	4 poles	2, 3 poles	4 poles		2, 3 poles	4 poles	2,3 poles	4 poles		Plug-in mounted	Screw-mounted	Fig.
30, 50, 60, 100, 125	E30-NM, S30-NM, E50-NM, S50-NM, E100-NM	ZE30-NM, ZS30-NM, ZE50-NM, ZS50-CM, ZE100-NM	③	—	—	75	—	10 (3P)	—	—	53 (3P)	—	53 (3P)	—	B	○	—	⑤
	PS50-PF, PS125-NF/NE, PS125-PF/PE, PS125-NN	—	TPCR16∗SPB	TPCR16∗S	60	90	120	2	2	4.5	61	61	60	60	P	○	—	1
	PE30-NF/NN, PS30-NF, PE50-NF/NN/NFZ/NFN, PS50-NF/NFZ, PE60-NF, PS60-NF, PE125-NF/NN/NFZ/NFN	PZE30-NF, PZS30-NF, PZE50-NF/NFN, PZS50-NF, PZE60-NF, PZS60-NF, PZE125-NF/NFN	T2CR12L∗SP	—	50	75	100	5.3	5.3	—	61	61	60.3	60.3	P	○	—	1
	S50-SF, S125-SF/SN, ZAS125-SF, NAE125-SF, NAS125-SF, NS125-SF	ZS50-SF, ZS100-SM, ZS125-SF, ZNS125-SF	T2CR12L∗SP	—	50	75	100	5.3	5.3	—	61	61	60.3	60.3	P	○	—	1
	S100-GF, S125-GF, ZAS50-GF, ZAS100-GF, ZAS125-GF	ZS100-GF, ZS125-GF	T2CR12∗SP	T2CR12∗S	—	90	120	2	2	6	41.5	—	40.5	—	P	○	—	1
	H100-NF, H125-NF, L100-NF, L125-NF	—	T2CR25∗SP	T2CR25∗S	—	105	140	2	2	6	77.5	77.5	39.5	39.5	P	○	—	1
100, 125, 225, 250	E250-SF, S250-SF, S250-SM/SN, ZAE250-SF, ZAS250-SF, PS250-NE/PF/PE/NN, NAE250-SF, NAS250-SF, NE250-SF, NS250-SF	ZE250-SF, ZS250-SF/SM, ZNE250-SF, ZNS250-SF	T2CR25L∗SP	—	105	105	140	2.3	2.3	5.3	58.6	58.6	57.1	57.1	P	○	—	1
	ZAS225-GF, ZAS250-GF	ZS225-GF, ZS250-GF	T2CR25∗SP	T2CR25∗S	—	105	140	2	2	6	42.5	42.5	39.5	39.5	P	○	—	1
	H225-NF/NE, H250-NF, L225-NF, L250-NF	—	T2CR25∗SP	T2CR25∗S	—	105	140	2	2	6	77.5	77.5	39.5	39.5	P	○	—	1
400, 600, 630	E400-NF, ZAE400-NF, ZAS400-NF/GF, NAE400-NF, NAS400-NF, NE400-NF, NS400-NF	ZE400-NF, ZS400-NF/GF, ZNE400-NF, ZNS400-NF	T2CR40∗SP	T2CR40∗S	—	140	185	3	3	5	97	97	93	93	P	○	—	1
	PS400-CF/NF/NE/GF/GE/NN, PH400-CF/CE, PS630-CF/NF/NE/GF/GE/NN, PH630-CF/CE	—	TPCR63∗SPB	TPCR63∗S	—	140	185	3.5	3.5	5	97	97	96	96	P	○	—	1
	H400-NE, L400-NE	—	T2CR40∗SP	T2CR40∗S	—	140	185	3	3	5	134	134	93	93	P	○	—	1
	S630-CF/NF/NE/GN, ZAS630-CF/NF, NS630-NF	ZS630-CF/NF	T2CR803SP T2CR804SB	XPS6	—	206	280	15	18	—	101 (103.5)	99 (101.5)	100.5 (103)	98 (100.5)	P (3 poles) B (4 poles)	—	○	2
	H630-NE, L630-NE	—	T2CR80∗LB	—	—	210	280	15	15	—	136 (138.5)	136 (138.5)	135 (137.5)	135 (137.5)	B	—	○	2
800	S800-CF/NF/NE/RF/RE/PF/PE/NN, ZAS800-CF/NF, NS800-NF	ZS800-CF/NF	T2CR803SP T2CR804SB	XPS6	—	206	280	15	18	—	101 (103.5)	99 (101.5)	100.5 (103)	98 (100.5)	P (3 poles) B (4 poles)	—	○	2
	H800-NE, L800-NE	—	T2CR80∗LB	—	—	210	280	15	15	—	136 (138.5)	136 (138.5)	135 (137.5)	135 (137.5)	B	—	○	2
1000	S1000-CE/NN	—	T2CR803SP T2CR804SB	XPS6	—	206	280	15	18	—	101 (103.5)	99 (101.5)	100.5 (103)	98 (100.5)	P (3 poles) B (4 poles)	—	○	2

Notes:

①: Some models are not available for 2-pole or 4-pole products. See the circuit breaker outline drawing in Chapter 7 for details.
②: The asterisk indicates the number of poles. Please state the number of poles at the asterisk position when ordering. One set includes 2 pcs terminal covers.
③: Supplied as standard with the circuit breaker body.
④: Values in parentheses indicate the distance to the head of terminal cover mounting screws.
⑤: See the circuit breaker outline dimensions drawing in Chapter 7 for details.

(3) CS for breakers with cable clamps

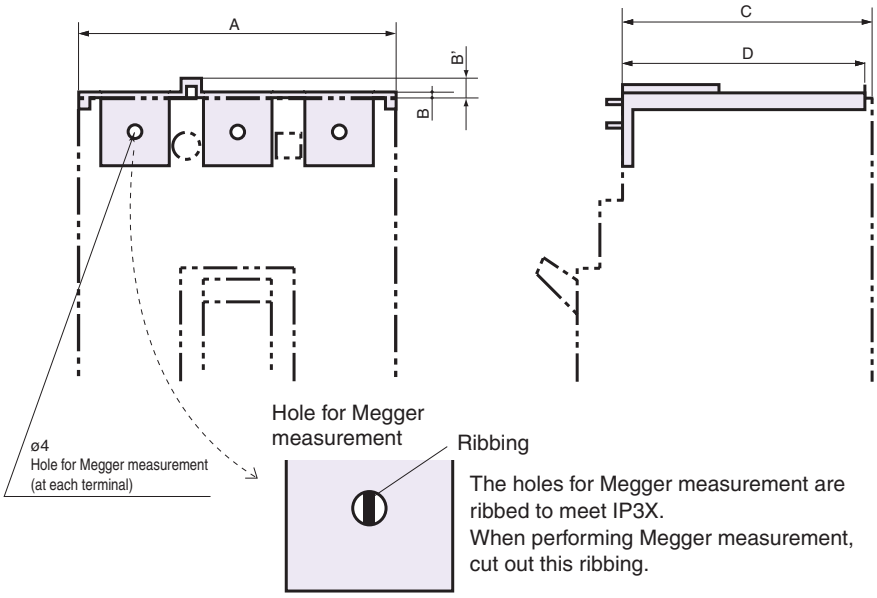

The holes for Megger measurement are ribbed to meet IP3X.
When performing Megger measurement, cut out this ribbing.

Plug-in mounted version

This version can be mounted simply by being plugged in the breaker body.

■ To be stated when ordering

- Please state "with CS" if ordering along with the breaker.
- Please state the order codes on the next page if ordering separately from the breaker.
  One set includes one terminal cover for the ON side and one for the OFF side.

Dimensions, mm

Frame size (A)	Types of MCCBs	Types of ELCBs	Order codes ①	Marking codes	A		B	B'	C	D	Colour of cover P: Grey Blue	Mounting version	
					3 poles	4 poles						Plug-in mounted	Screw-mounted
50, 100, 125	**PS50-PF, PS125-NF/PF/NM/NN, PS125-NE/PE**	—	TPCS16∗SPB	TPCS16∗S	90	120	2	4.5	61	60	P	○	—
50, 100, 125, 225, 250	**S50-SF, S125-SF/SN, ZAS125-SF**	**ZS50-SF, ZS100-SM, ZS125-SF**	T2CS12L∗SP	—	75	100	25	—	61	60.3	P	○	—
	S100-GF, S125-GF, ZAS50-GF, ZAS100-GF, ZAS125-GF	**ZS100-GF, ZS125-GF**	T2CS12∗SP	T2CS12∗S	90	120	2.5	6	61	59.5	P	○	—
	H100-NF, H125-NF, L100-NF, L125-NF	—	T2CS25∗SP	T2CS25∗S	105	140	2.5	4.5	96	59.5	P	○	—
	E250-SF, S250-SF, S250-SM/SN, ZAE250-SF, ZAS250-SF, PS250-NE/PF/PE/NN	**ZE250-SF, ZS250-SF/SM**	T2CS25L∗SP	T2CS25L∗S	105	140	2.3	5.3	58.6	57.1	P	○	—
	ZAS225-GF, ZAS250-GF	**ZS225-GF, ZS250-GF**	T2CS25∗SP	T2CS25∗S	105	140	2.5	6	61	59.5	P	○	—
	H225-NF/NE, H250-NF, L225-NF, L250-NF	—	T2CS25∗SP	T2CS25∗S	105	140	2.5	4.5	96	59.5	P	○	—
400, 600, 630	**E400-NF, ZAE400-NF, ZAS400-NF/GF**	**ZE400-NF, ZS400-NF/GF**	T2CS40∗SP	T2CS40∗S	140	185	3	5	97	93	P	○	—
	PS400-CF/NF/GF/NN, PS400-NE/GE, PH400-CF, PH400-CE, PS630-CF/NF/GF/NN, PS630-NE/GE, PH630-CF, PH630-CE	—	TPCS63∗SPB	TPCS63∗S	140	185	3.5	4.6	97	96	P	○	—
	H400-NE, L400-NE	—	T2CS40∗SP	T2CS40∗S	140	185	3	5	134	93	P	○	—

Notes:

①: The asterisk indicates the number of poles. Please state the number of poles at the asterisk position when ordering.
One set includes one terminal cover for the ON side and one for the OFF side.

Remark 1: Terminal covers for motor protection breakers are 3-pole type only.

8. Interpole barriers (BA)

Interpole barriers serve to enhance electrical insulation between poles and prevent short-circuit due to electrically conductive foreign matter. Combined use of interpole barriers and terminal covers (standard type) is not possible.

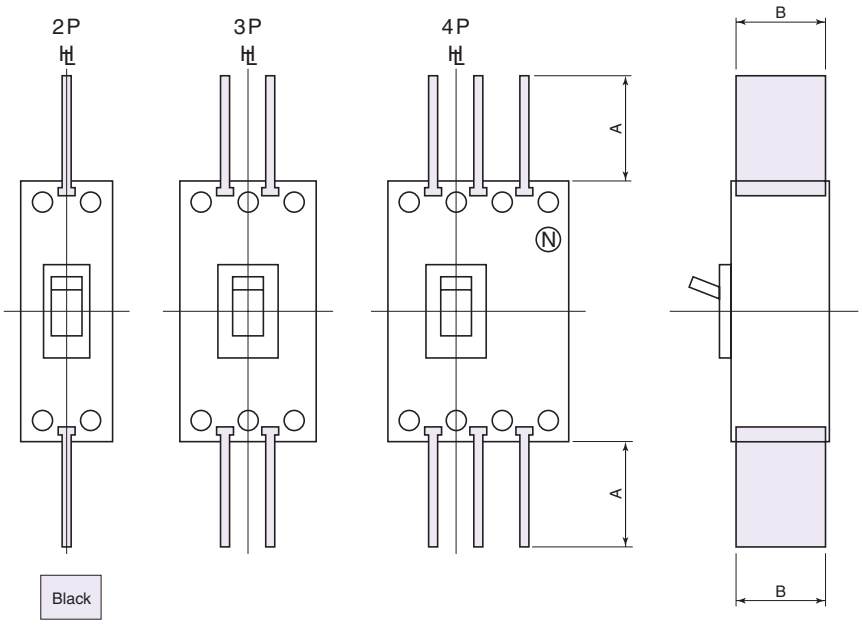

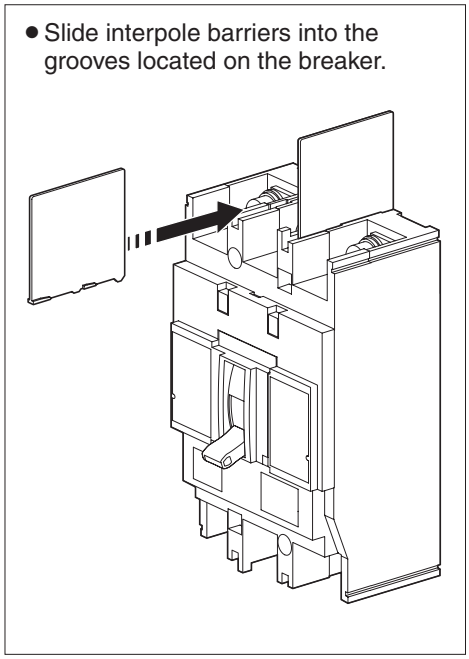

■ To be stated when ordering

Please specify the type when ordering. Supplied as a set of 2 pcs. (∗: Supplied as a set of 1 pc.)

Caution: Be sure to use the interpole barriers supplied with the breaker in order to prevent accidents.

Dimensions, mm

Types of MCCBs	Types of ELCBs	Order codes	Marking codes	A	B	Front-connected
TB-5S, TB-5P, TB-5D	—	∗ TQQ-2CC	—	36	50	●
E30-NM, S30-NM	ZE30-NM, ZS30-NM	T2BA053NH	BZ6B10C	50	45	●
E50-NM, S50-NM, E100-NM	ZE50-NM, ZS50-CM, ZE100-NM	T2BA053NH	BZ6B10C	50	45	◎
PE30-NF/NN, PS30-NF, PE50-NF/NN/NFZ/NFN, PS50-NF/NFZ, PE60-NF, PS60-NF, PE125-NF/NN/NFZ/NFN	PZE30-NF, PZS30-NF, PZE50-NF/NFN, PZS50-NF, PZE60-NF, PZS60-NF, PZE125-NF/NFN	TPBA123KH	—	50	55	◎
S50-SF, S125-SF, S125-SN, ZAS125-SF, NAE125-SF, NAS125-SF, NS125-SF	ZS50-SF, ZS100-SM,ZS125-SF, ZNS125-SF	T2BA16L3SH	—	50	55	◎
PS50-PF, PS125-NF/PF/NN, PS125-NE/PE	—	T2BA16L3SH	—	50	55	◎
S100-GF, S125-GF, ZAS-50GF, ZAS100-GF, ZAS125-GF	ZS100-GF, ZS125-GF	T2BA123SH	T2BA12S	47	53	◎
H100-NF, H125-NF, H225-NF/NE, H250-NF, L100-NF, L125-NF, L225-NF, L250-NF, L125-PF	—	T2BA253LH	T2BA25L	100	88	◎
E250-SF, S250-SF, S250-SM/SN, ZAE250-SF, ZAS250-SF, NAE250-SF, NAS250-SF, NE250-SF, NS250-SF	ZE250-SF, ZS250-SF/SM, ZNE250-SF, ZNS250-SF	T2BA25L3SH	T2BA25LS	101	53	◎
PS250-PF/NN, PS250-NE/PE	—	T2BA25L3SH	T2BA25LS	101	53	◎
ZAS225-GF, ZAS250-GF	ZS225-GF, ZS250-GF	T2BA25L3SH	T2BA25LS	100	53	◎
PS400-CF/NF/GF/NN, PS400-NE/GE	—	T2BA403SH	TQQ-5BA	110	95	◎
PH400-CF, PH400-CE	—	T2BA403SH	TQQ-5BA	110	95	◎
E400-NF, H400-NE, L400-NE, ZAE400-NF, ZAS400-NF/GF, NAE400-NF, NAS400-NF, NE400-NF, NS400-NF	ZE400-NF, ZS400-NF/GF, ZNE400-NF, ZNS400-NF	T2BA403SH	TQQ-5BA	110	95	◎
PS630-CF/NF/GF/NN, PS630-NE/GE	—	T2BA403SH	TQQ-5BA	110	95	◎
S630-CF/NF/NE/GN, ZAS630-CF/NF, NS630-NF, H630-NE, L630-NE	ZS630-CF/NF	T2BA403SH	TQQ-5BA	110	95	◎
PH630-CF, PH630-CE	—	T2BA403SH	TQQ-5BA	110	95	◎
S800-CF/NF/RF/PF, S800-NE/RE/PE/NN, NS800-NF, ZAS800-CF/NF, H800-NE, L800-NE, S1000-CE/NN	ZS800-CF/NF	T2BA403SH	TQQ-5BA	110	95	◎
S1250-NE/GE/NN	—	T2BA403SH	TQQ-5BA	110	95	◎
S1600-NE/NN	—	T2BA403SH	TQQ-5BA	110	95	◎
TL-1000NE, TL-1200NE	—	∗ TQQ-5BA	TQQ-5BA	110	95	◎
XS2000NE/NN, XS2500NE/NN, XS3200NE/NN	—	—	—	—	—	—
TB-51C, TB-52C, TB50KSL, TB50KSZ, TB100KSZ	TZ30EC, TZ50EE, TZ100EC, TZ-51C, TZ-52C	—	—	—	—	—

◎: 2P: 1 pc, 3P: 2 pcs, 4P: 3 pcs of interpole barriers are supplied as standard. (Front-connected only)

●: Optional One set include 2 pcs for a 3P single-sided pole. (One set include 1 pc for TQQ) — : "no" or "not available".

9. Terminal blocks (TF)

Applies to front-connected type and rear-connected type circuit breakers with internally mounted accessories.
The lead wires from internally mounted accessories are connected to this terminal block.

6 terminals

Vertical leading type with 30/50/100A frame MCCB/ELCB

Mounting position/typical terminal arrangement

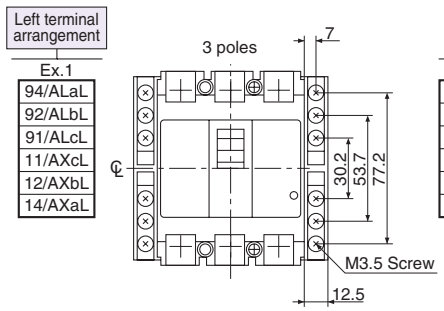

Right terminal arrangement

Ex.1	Ex.2	Ex.3	Ex.4
	04/ALaR	21/AXcR	04/ALaR
	02/ALbR	22/AXbR	02/ALbR
	01/ALcR	24/AXaR	01/ALcR
C2	21/AXcR	TL1	TL1
	22/AXbR		
C1	24/AXaR	TL2	TL2

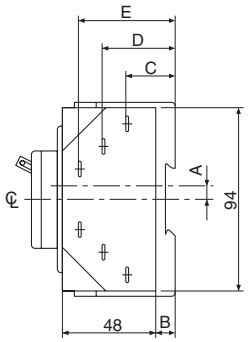

Dimensions, mm

Frame size (A)	Types of breakers		A	B	C	D	E
	MCCB	ELCB					
30	**E30-NM, S30-NM**	**ZE30-NM, ZS30-NM**	0	9	23.5	36	48.5
50	**E50-NM, S50-NM**	**ZE50-NM, ZS50-CM**					
100	**E100-NM**	**ZE100-NM**					

Notes:
1) Tightening torque of M3.5 terminal screws: 0.9 – 1.2 Nm
2) Applicable wire size: 2.0mm^2 max
3) The undervoltage trip device (with terminal block) must be mounted on the right-hand side of the circuit breaker and the terminal blocks of the auxiliary switch and alarm switch cannot be mounted on the right-hand side.
4) The shunt trip device (with terminal block) of the earth leakage breaker is mounted on the right side of the breaker and the terminal blocks of the auxiliary switch and alarm switch cannot be mounted on the right-hand side.
5) Contact to TERASAKI for the combination other than the above.

6 terminals

Vertical leading type 30/50/100 A frame Circuit breaker with earth leakage alarm/earth leakage circuit breaker for distribution boards and control boards

Mounting position/typical terminal arrangement

Left terminal arrangement

Ex.1	Ex.2	Ex.3
AXc		S2
AXb		
AXa		S1
ALc	S2	ALc
ALb		ALb
ALa	S1	ALa

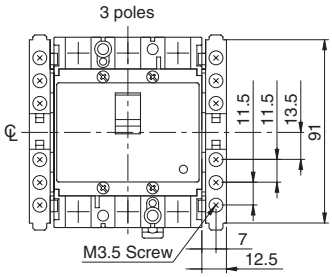

Right terminal arrangement

Ex.1	Ex.2
	RST
	RST
TBL	ECAc
	ECAb
TBL	ECAa

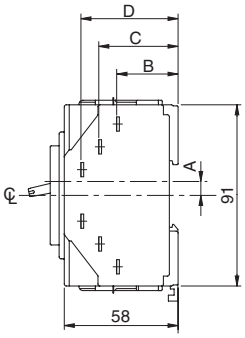

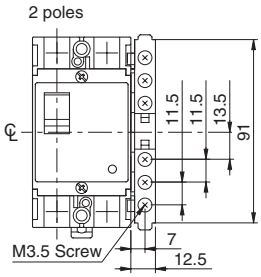

Right terminal arrangement

Ex.1	Ex.2
AXc	
AXb	
AXa	
ALc	TBL
ALb	
ALa	TBL

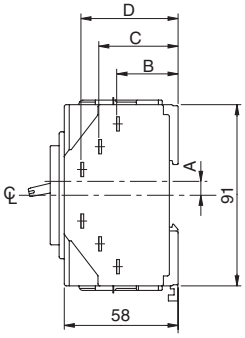

Dimensions, mm

Frame size (A)	Types of breakers		A	B	C	D
	Circuit Breaker with earth leakage alarm	ELCB				
30		**TZ30EC**	0	31	40	49
50	**TB50KSL, TB50KSZ**	**TZ50EE**				
100	**TB100KSZ**	**TZ100EC**				

Notes:
1) Tightening torque of M3.5 terminal screws: 0.9 – 1.2 Nm
2) Applicable wire size: 2.0mm^2 max
3) TBL is a test lead terminal.
4) RST is a remote reset terminal.
5) ECAc, b, a are the terminals for the earth leakage alarm output contacts.
6) Contact to TERASAKI for the combination other than the above.

9. Terminal blocks (TF)

18mm width 6 terminals
Vertical leading type (T2TF00L) with 50/100/125A frame MCCB

Mounting position/typical terminal arrangement

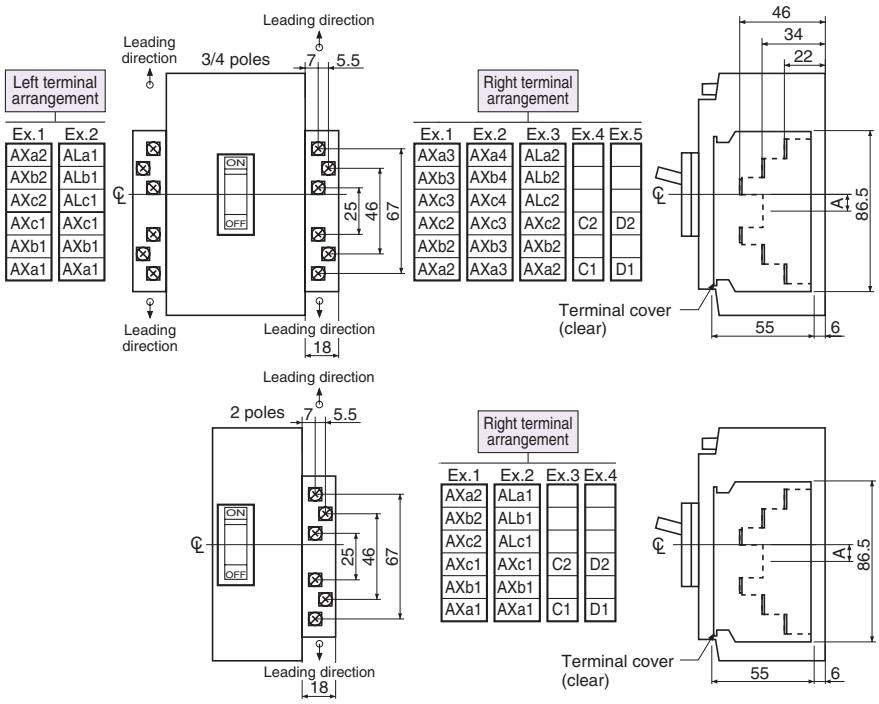

Dimensions, mm

Frame size (A)	Types of breakers MCCB	Number of poles	A
30, 50, 60	**PE30-NF/NN, PS30-NF, PE50-NF/NN, PS50-NF, PE60-NF, PS60-NF**	2/3 poles	9
	S50-SF	2/3/4 poles	9
100, 125	**PE125-NF/NN**	2/3 poles	9
	S125-SF	2/3/4 poles	9
	S125-SN	3/4 poles	9

Notes:
1) Tightening torque of M3.5 terminal screws: 0.9 – 1.2 Nm
2) Applicable wire size: 2.0mm² max

Combination of terminal arrangement (for 3 poles/4 poles)

AX	AL	SH	UV	Left terminal	Right terminal
1C	1C	1	—	Ex.2	Ex.4
1C	1C	—	1	Ex.2	Ex.5
1C	2C	—	—	Ex.2	Ex.3
2C	—	1	—	Ex.1	Ex.4
2C	—	—	1	Ex.1	Ex.5
2C	2C	—	—	Ex.2	Ex.3
3C	1C	—	—	Ex.2	Ex.1
4C	—	—	—	Ex.1	Ex.2

AX, AL takes precedence left terminal connection.
AL is connected to the left terminal in preference to the AX.
Contact TERASAKI for the combination other than the above.

18mm width 6 terminals
Vertical leading type (T2TF00L) with 50/100/125A frame MCCB/ELCB

Mounting position/typical terminal arrangement

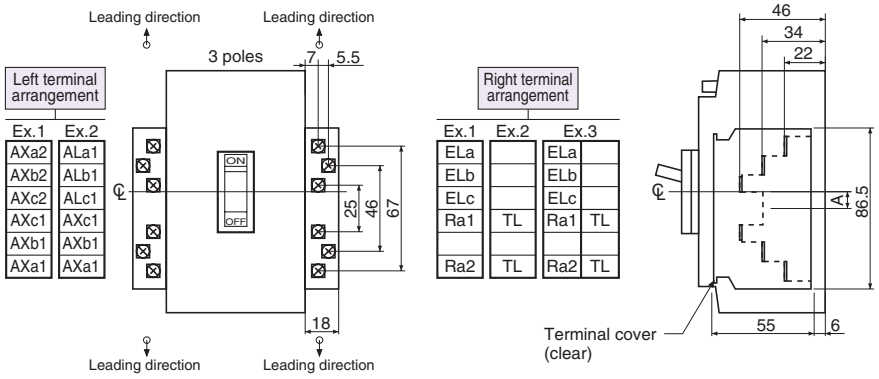

Dimensions, mm

Frame size (A)	Types of breakers MCCB	Types of breakers ELCB	A
30, 50, 60	**PE50-NFZ *3) PE50-NFN PS50-NFZ *3)**	**PZE30-NF, PZS30-NF, PZE50-NF/NFN, PZS50-NF, PZE60-NF, PZS60-NF ZS50-SF *5)**	9
100, 125	**PE125-NFZ *3) PE125-NFN ZAS125-SF *3) *4) *5) NS125-SF *5) NAE125-SF *6) NAS125-SF *6)**	**PZE125-NF PZE125-NFN ZS125-SF *5) ZS100-SM *5) ZNS125-SF *5)**	9

Notes:
1) Tightening torque of M3.5 terminal screws: 0.9 – 1.2 Nm
2) Applicable wire size: 2.0 mm² (max)
3) If the terminal blocks are applied for internal accessories as standard, ELa, ELb, ELc (earth leakage alarm output terminal) is also applied the terminal block.
4) Ra1, Ra2 (remote reset terminal) can be used.
5) TL (test lead terminal) can be used.
6) Can only be used with the left terminal block.
7) Contact to TERASAKI for the combination other than the left.

18mm width 6 terminals

Vertical leading type (T2TF00L) with 50/100/125A frame MCCB

Mounting position/typical terminal arrangement

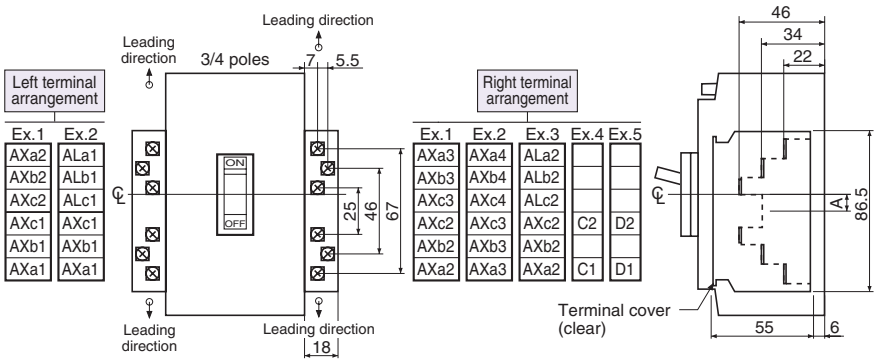

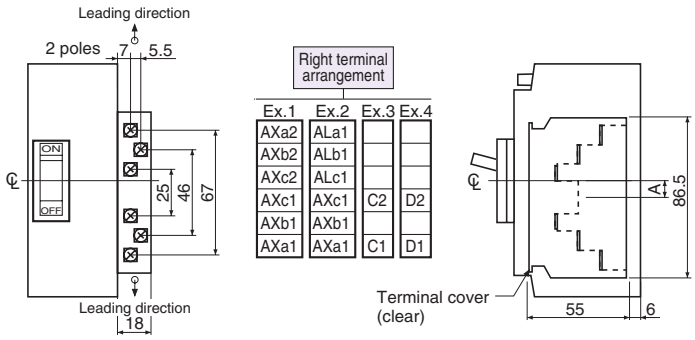

Dimensions, mm

Frame size (A)	Types of breakers MCCB	Poles	A
50	**PS50-PF**	2/3/4 poles	8
100, 125	**PS125-NF/PF**	2/3/4 poles	8
	PS125-NN	3/4 poles	8

Notes:
1) Tightening torque of M3.5 terminal screws: 0.9 – 1.2 Nm
2) Applicable wire size: 2.0mm² max

Combination of terminal arrangement (for 3 poles/4 poles)

AX	AL	SH	UV	Left terminal	Right terminal
1C	1C	1	—	Ex.2	Ex.4
1C	1C	—	1	Ex.2	Ex.5
1C	2C	—	—	Ex.2	Ex.3
2C	—	1	—	Ex.1	Ex.4
2C	—	—	1	Ex.1	Ex.5
2C	2C	—	—	Ex.2	Ex.3
3C	1C	—	—	Ex.2	Ex.1
4C	—	—	—	Ex.1	Ex.2

AX, AL takes precedence left terminal connection.
AL is connected to the left terminal in preference to the AX.
Contact TERASAKI for the combination other than the above.

18mm width 6 terminals

Vertical leading type (T2TF00L) with 100/125A frame Electronic MCCB

Mounting position/ typical terminal arrangement

Combination of terminal arrangement

AX	AL	SH	UV	PTA	Left terminal	Right terminal
1C	1C	1	—	1	Ex.6	Ex.4
1C	1C	—	1	1	Ex.6	Ex.5
2C	—	1	—	1	Ex.5	Ex.4
2C	—	—	1	1	Ex.5	Ex.5
1C	2C	—	—	1	Ex.6	Ex.3
2C	2C	—	—	1	Ex.6	Ex.3
3C	1C	—	—	1	Ex.6	Ex.1
4C	—	—	—	1	Ex.5	Ex.2
1C	—	—	—	1	Ex.3	
—	1C	—	—	1	Ex.4	
—	—	—	—	1	Ex.3	

AX, AL takes precedence left terminal connection.
AL is connected to the left terminal in preference to the AX.
Contact TERASAKI for the combination other than the above.

Dimensions, mm

Frame size (A)	Types of breakers Electronic MCCB	A
100, 125	**PS125-NE/PE**	8

Notes:
1) Tightening torque of M3.5 terminal screws: 0.9 – 1.2 Nm
2) Applicable wire size: 2.0mm² max
3) The following SMART MCCB cables cannot be connected to the terminal blocks.
Zone selective interlocking
Optional alarm output contact
Control power supply
Communication module

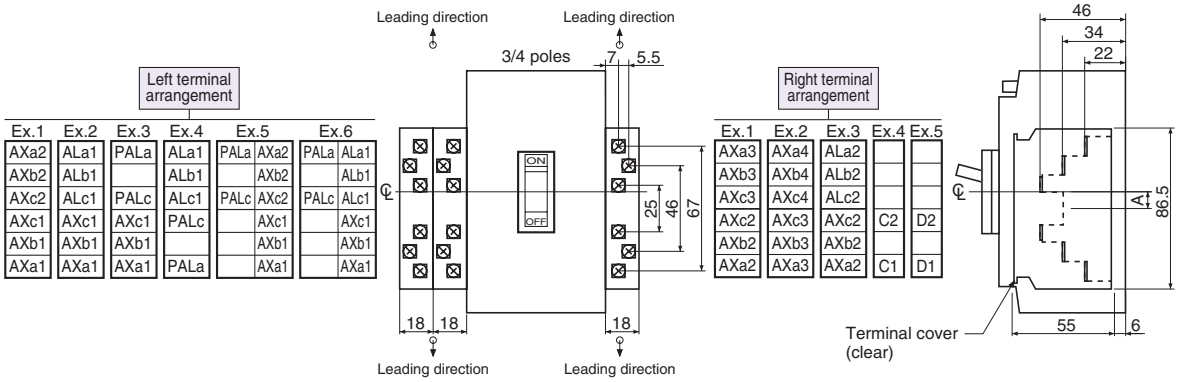

6

Accessories

9. Terminal blocks (TF)

18mm width 6 terminals
Vertical leading type (T2TFX0) with 100/125A frame MCCB

Mounting position/typical terminal arrangement

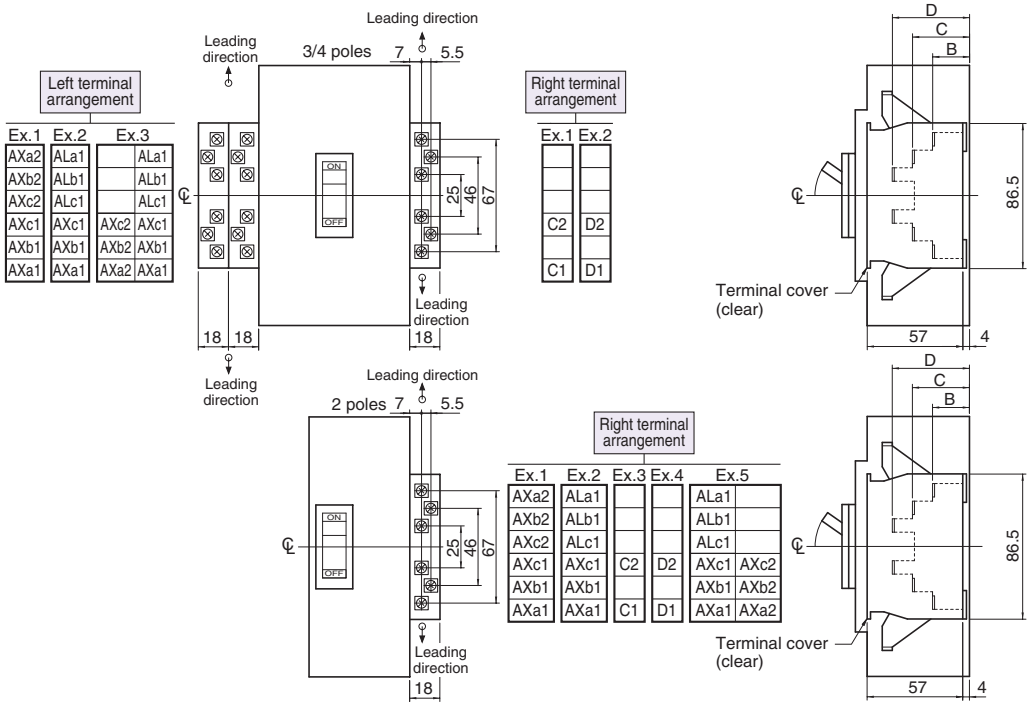

Dimensions, mm

Frame size (A)	Types of breakers MCCB	B	C	D
100, 125	**S100-GF, S125-GF**	22	34	46

Notes:
1) Tightening torque of M3.5 terminal screws: 0.9 – 1.2 Nm
2) Applicable wire size: 2.0mm² max
3) Contact to TERASAKI for the combination other than the left.

18mm width 6 terminals
Vertical leading type (T2TFX0) with 50/100/125A frame MCCB/ELCB

Mounting position/typical terminal arrangement

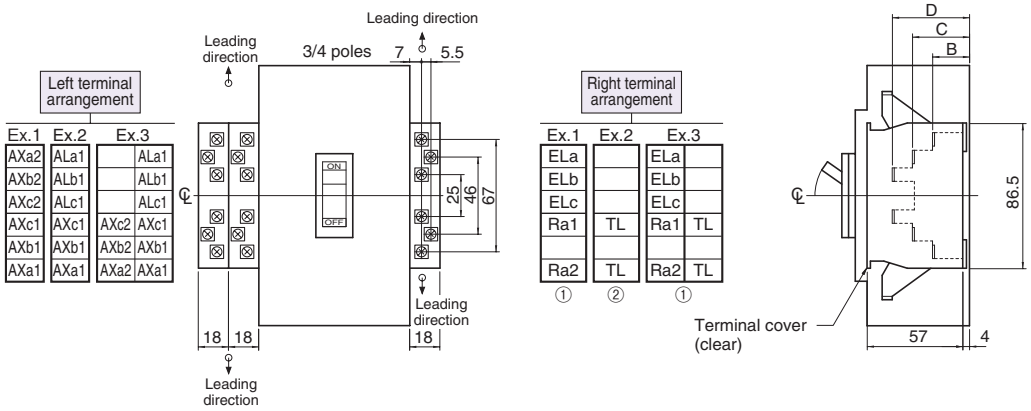

Dimensions, mm

Frame size (A)	Types of breakers MCCB	Types of breakers ELCB	B	C	D
50, 100, 125	**ZAS50-GF, ZAS100-GF, ZAS125-GF**	**ZS100-GF, ZS125-GF**	22	34	46

Notes:
1) Tightening torque of M3.5 terminal screws: 0.9 – 1.2 Nm
2) Applicable wire size: 2.0mm² max
3) Ra1, Ra2 are remote reset terminals.
4) If the terminal blocks are applied for internal accessories as standard, ELa, ELb, ELc (earth leakage alarm output terminal) is also applied the terminal block.
5) For earth leakage circuit breakers.
6) Contact to TERASAKI for the combination other than the left.

18mm width 6 terminals
Vertical leading type (T2TFX0) with 100/125/225/250A frame MCCB

Mounting position/typical terminal arrangement

Dimensions, mm

Frame size (A)	Types of breakers		B	C	D	E
	MCCB	ELCB				
100, 125, 225, 250	**H100-NF, H125-NF, H225-NF/NE, H250-NF, L100-NF, L125-NF, L225-NF, L250-NF**		57	69	81	39

Notes:
1) Tightening torque of M3.5 terminal screws: 0.9 – 1.2 Nm
2) Applicable wire size: 2.0mm² max
3) Contact to TERASAKI for the combination other than the below.

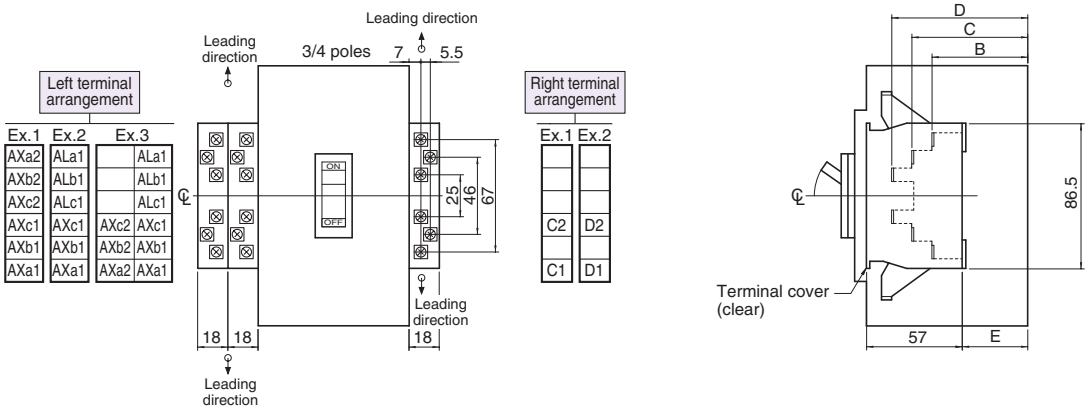

18mm width 6 terminals
Vertical leading type (T2TFX0) with 225/250A frame MCCB/ELCB

Mounting position/typical terminal arrangement

Dimensions, mm

Frame size (A)	Types of breakers		B	C	D
	MCCB	ELCB			
225, 250	**ZAS225-GF, ZAS250-GF**	**ZS225-GF, ZS250-GF**	22	34	46

Notes:
1) Tightening torque of M3.5 terminal screws: 0.9 – 1.2 Nm
2) Applicable wire size: 2.0mm² max
3) Ra1, Ra2 are remote reset terminals.
4) If the terminal blocks are applied for internal accessories as standard, ELa, ELb, ELc (earth leakage alarm output terminal) is also applied the terminal block.
5) For earth leakage circuit breakers.
6) Contact to TERASAKI for the combination other than the below.

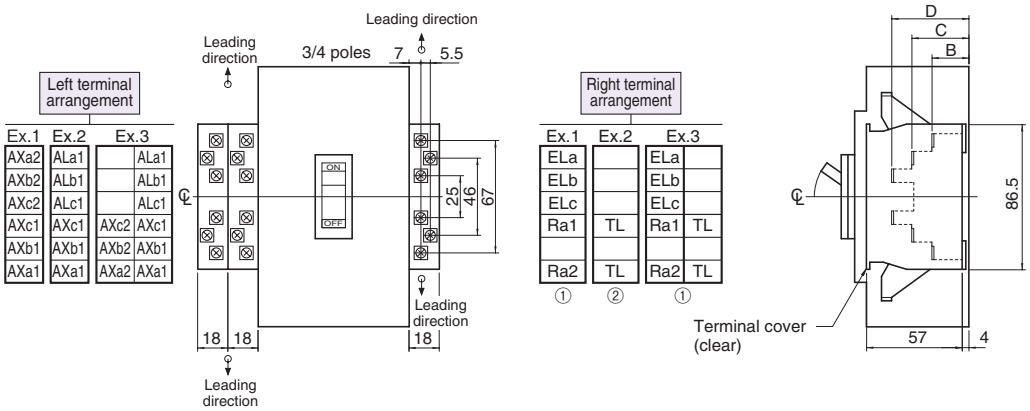

9. Terminal blocks (TF)

18mm width 6 terminals
Vertical leading type (T2TF00L) with 225/250A frame MCCB

Mounting position/typical terminal arrangement

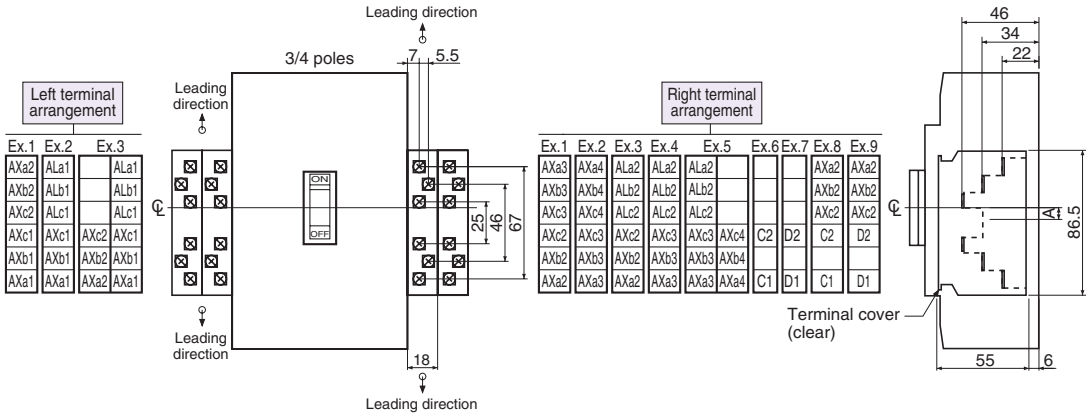

Dimensions, mm

Frame size (A)	Types of breakers MCCB	Number of poles	A
225, 250	**E250-SF, S250-SM**	3 poles	7
	S250-SF, S250-SN	3/4 poles	7

Notes:
1) Tightening torque of M3.5 terminal screws: 0.9 – 1.2 Nm
2) Applicable wire size: 2.0mm² max

Combination of terminal arrangement

AX	AL	SH	UV	Left terminal	Right terminal
1C	1C	1	—	Ex.2	Ex.6
1C	1C	—	1	Ex.2	Ex.7
2C	—	1	—	Ex.1	Ex.6
2C	—	—	1	Ex.1	Ex.7
2C	2C	—	—	Ex.2	Ex.3
2C	1C	1	—	Ex.2	Ex.8
2C	1C	—	1	Ex.2	Ex.9
3C	1C	—	—	Ex.2	Ex.1
3C	2C	—	—	Ex.3	Ex.4
4C	—	—	—	Ex.1	Ex.2
4C	2C	—	—	Ex.3	Ex.5

AX, AL takes precedence left terminal connection.
AL is connected to the left terminal in preference to the AX.
1 row terminal block is used in preference to 2 rows the terminal blocks.
Contact TERASAKI for the combination other than the above.

18mm width 6 terminals
Vertical leading type (T2TF00L) with 225/250A frame MCCB/ELCB

Mounting position/typical terminal arrangement

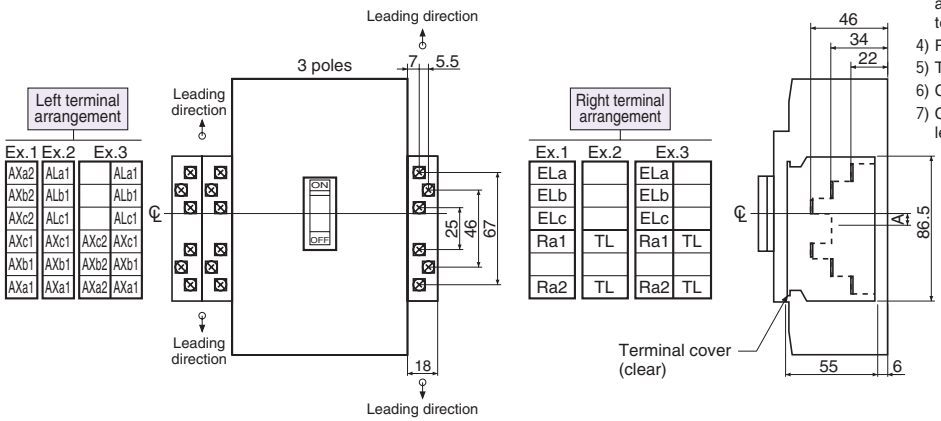

Dimensions, mm

Frame size (A)	Types of breakers MCCB	Types of breakers ELCB	A
225, 250	**ZAE250-SF *3) *4) *5), ZAS250-SF *3) *4) *5), NE250-SF *5), NS250-SF *5), NAE250-SF *3) *4) *6), NAS250-SF *3) *4) *6)**	**ZE250-SF *5), ZS250-SF *5), ZNE250-SF *5), ZNS250-SF *5), ZS250-SM *5)**	7

Notes:
1) Tightening torque of M3.5 terminal screws: 0.9 – 1.2 Nm
2) Applicable wire size: 2.0mm² max
3) If the terminal blocks are applied for internal accessories as standard, ELa, ELb, ELc (earth leakage alarm output terminal) is also applied the terminal block.
4) Ra1, Ra2 (remote reset terminal) can be used.
5) TL (test lead terminal) can be used.
6) Can only be used with the left terminal block.
7) Contact to TERASAKI for the combination other than the left.

18mm width 6 terminals
Vertical leading type (T2TF00L) with 225/250A frame MCCB

Mounting position/typical terminal arrangement

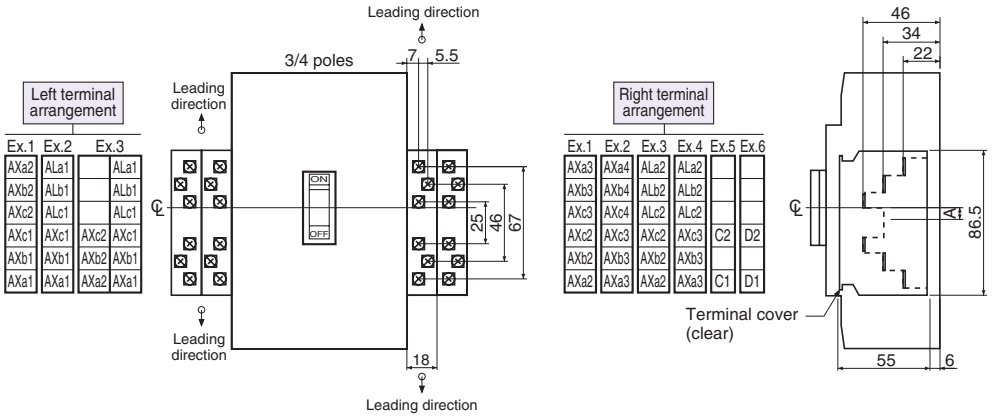

Dimensions, mm

Frame size (A)	Types of breakers	A
	MCCB	
225, 250	**PS250-PF/NN**	8

Notes:
1) Tightening torque of M3.5 terminal screws: 0.9 – 1.2 Nm
2) Applicable wire size: 2.0mm² max

Combination of terminal arrangement

AX	AL	SH	UV	Left terminal	Right terminal
1C	1C	1	—	Ex.2	Ex.5
1C	1C	—	1	Ex.2	Ex.6
2C	1C	1	—	Ex.3	Ex.5
2C	1C	—	1	Ex.3	Ex.6
2C	2C	—	—	Ex.2	Ex.3
3C	1C	—	—	Ex.2	Ex.1
3C	2C	—	—	Ex.3	Ex.4
4C	—	—	—	Ex.1	Ex.2

AX, AL takes precedence left terminal connection.
AL is connected to the left terminal in preference to the AX.
1 row terminal block is used in preference to 2 rows the terminal blocks.
Contact TERASAKI for the combination other than the above.

18mm width 6 terminals
Vertical leading type (T2TF00L) with 225/250A frame Electronic MCCB

Mounting position/typical terminal arrangement

Combination of terminal arrangement

AX	AL	SH	UV	PTA	Left terminal	Right terminal
1C	1C	1	—	1	Ex. 6	Ex. 5
1C	1C	—	1	1	Ex. 6	Ex. 6
2C	1C	1	—	1	Ex. 6	Ex. 5
2C	1C	—	1	1	Ex. 6	Ex. 6
2C	2C	—	—	1	Ex. 6	Ex. 3
3C	1C	—	—	1	Ex. 6	Ex. 1
3C	2C	—	—	1	Ex. 6	Ex. 4
4C	—	—	—	1	Ex. 7	Ex. 2
1C	—	—	—	1	Ex. 4	
—	1C	—	—	1	Ex. 5	
—	—	—	—	1	Ex. 4	

AX, AL takes precedence left terminal connection.
AL is connected to the left terminal in preference to the AX.
1 row terminal block is used in preference to 2 rows the terminal blocks.
Contact TERASAKI for the combination other than the above.

Dimensions, mm

Frame size (A)	Types of breakers	A
	Electronic MCCB	
225, 250	**PS250-NE/PE**	8

Notes:
1) Tightening torque of M3.5 terminal screws: 0.9 – 1.2 Nm
2) Applicable wire size: 2.0mm² max
3) The following SMART MCCB cables cannot be connected to the terminal blocks.
Zone selective interlocking
Optional alarm output contact
Control power supply
Communication module

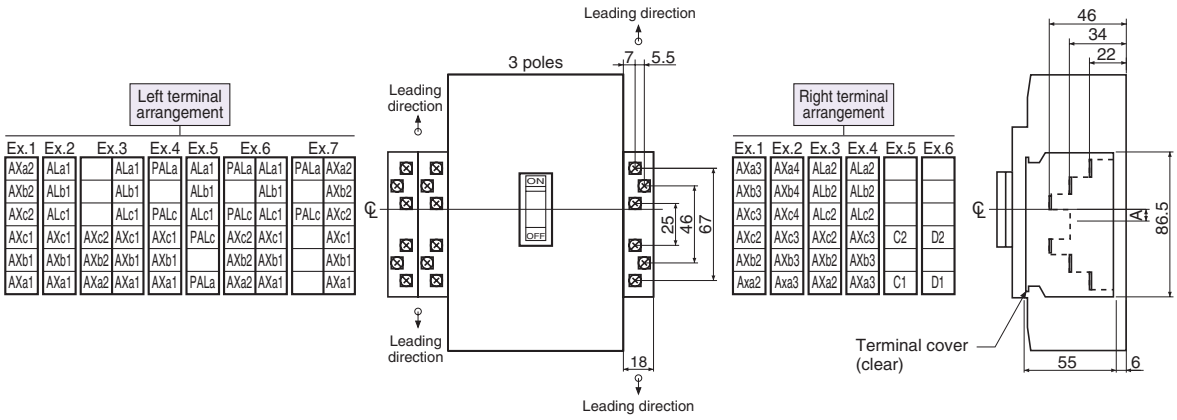

6 Accessories

9. Terminal blocks (TF)

18mm width 6 terminals

Vertical leading type (T2TFX0) with 400A frame MCCB

Mounting position/ typical terminal arrangement

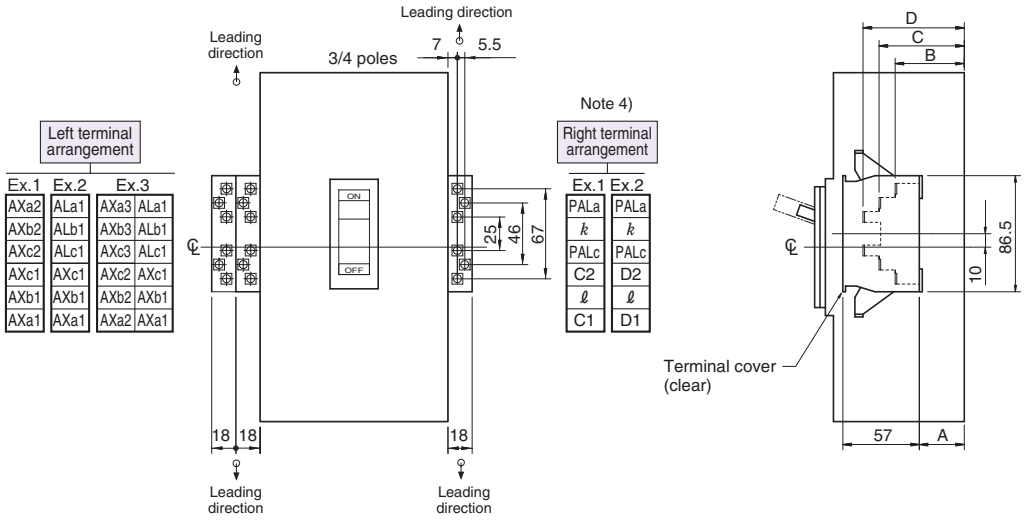

Dimensions, mm

Frame size (A)	Types of breakers MCCB	A	B	C	D
400	**E400-NF**	33.5	51.5	63.5	75.5
	H400-NE, L400-NE	70.5	88.5	100.5	112.5

Notes:
1) Tightening torque of M3.5 terminal screws: 0.9 – 1.2 Nm
2) Applicable wire size: 2.0mm² max
3) k, ℓ are the terminals to connect to the CT for a separate neutral wire. Separate neutral wire CTs are required for 3-phase 4-wire system, when a 3-pole circuit breaker with ground fault trip function is used.
4) In the case of providing pre-trip alarm terminals (PALa, PALc) to the terminal block,OCR controller will be installed external to the breaker.
5) Contact to TERASAKI for the combination other than the left.

18mm width 6 terminals

Vertical leading type (T2TFX0) with 400A frame MCCB/ELCB

Mounting position/ typical terminal arrangement

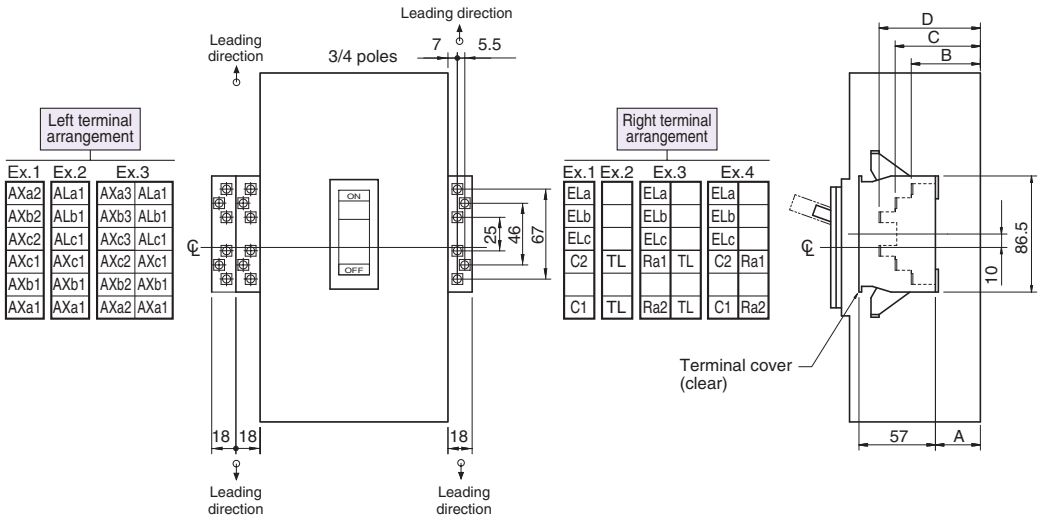

Dimensions, mm

Frame size (A)	Types of breakers MCCB	Types of breakers ELCB	A	B	C	D
400	**ZAE400-NF *3) *4) *5)** **ZAS400-NF *3) *4) *5)** **ZAS400-GF *3) *4) *5)** **NE400-NF *5), NS400-NF *5)** **NAE400-NF *6), NAS400-NF *6)**	**ZE400-NF *5)** **ZS400-NF *5)** **ZS400-GF *5)** **ZNE400-NF *5)** **ZNS400-NF *5)**	33.5	51.5	63.5	75.5

Notes:
1) Tightening torque of M3.5 terminal screws: 0.9 – 1.2 Nm
2) Applicable wire size: 2.0mm² max
3) If the terminal blocks are applied for internal accessories as standard, ELa, ELb, ELc (earth leakage alarm output terminal) is also applied the terminal block.
4) Ra1, Ra2 (remote reset terminal) can be used.
5) TL (test lead terminal) can be used.
6) Can only be used with the left terminal block.
7) Contact to TERASAKI for the combination other than the left.

18mm width 6 terminals
Vertical leading type (T2TF00L) with 400/600A frame MCCB

Mounting position/typical terminal arrangement

Combination of terminal arrangement

AX	AL	SH	UV	Left terminal	Right terminal
1C	1C	1	—	Ex. 2	Ex. 3
1C	1C	—	1	Ex. 2	Ex. 4
2C	—	1	—	Ex. 1	Ex. 3
2C	—	—	1	Ex. 1	Ex. 4
2C	2C	—	—	Ex. 2	Ex. 1
2C	1C	1	—	Ex. 2	Ex. 5
2C	1C	—	1	Ex. 2	Ex. 6
3C	1C	—	—	Ex. 3	Ex. 3
3C	2C	—	—	Ex. 3	Ex. 2

AX, AL takes precedence left terminal connection.
AL is connected to the left terminal in preference to the AX.
1 row terminal block is used in preference to 2 rows the terminal blocks.
Contact TERASAKI for the combination other than the above.

Left terminal arrangement

Ex.1	Ex.2	Ex.3	
AXa2	ALa1		ALa1
AXb2	ALb1		ALb1
AXc2	ALc1		ALc1
AXc1	AXc1	AXc2	AXc1
AXb1	AXb1	AXb2	AXb1
AXa1	AXa1	AXa2	AXa1

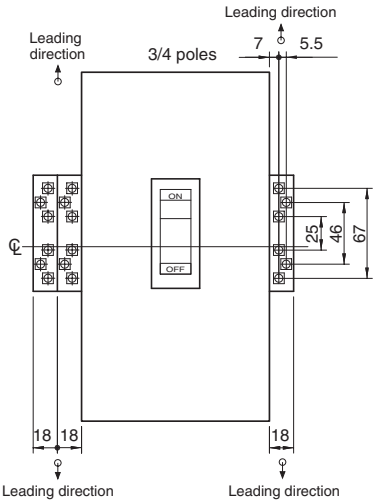

Right terminal arrangement

Ex.1	Ex.2	Ex.3	Ex.4	Ex.5	Ex.6
ALa2	ALa2	AXa3	AXa3	AXa2	AXa2
ALb2	ALb2	AXb3	AXb3	AXb2	AXb2
ALc2	ALc2	AXc3	AXc3	AXc2	AXc2
AXc2	AXc3	C2	D2	C2	D2
AXb2	AXb3				
AXa2	AXa3	C1	D1	C1	D1

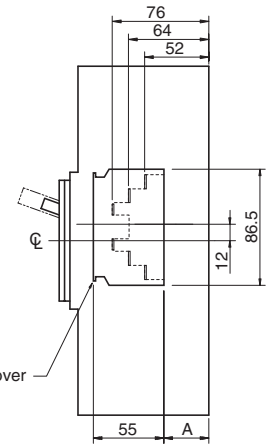

Dimensions, mm

Frame size (A)	Types of breakers MCCB	A
400	**PS400-CF/NF/GF/NN**	36
600	**PS630-CF/NF/GF/NN**	36

Notes:
1) Tightening torque of M3.5 terminal screws: 0.9 – 1.2 Nm
2) Applicable wire size: 2.0mm² max

18mm width 6 terminals
Vertical leading type (T2TF00L) with 400/630A frame Electronic MCCB

Mounting position/typical terminal arrangement

Combination of terminal arrangement

AX	AL	SH	UV	PTA	Left terminal	Right terminal
1C	1C	1	—	1	Ex. 6	Ex. 3
1C	1C	—	1	1	Ex. 6	Ex. 4
2C	—	1	—	1	Ex. 7	Ex. 3
2C	—	—	1	1	Ex. 7	Ex. 4
2C	2C	—	—	1	Ex. 6	Ex. 1
2C	1C	1	—	1	Ex. 8	Ex. 5
2C	1C	—	1	1	Ex. 8	Ex. 6
3C	1C	—	—	1	Ex. 6	Ex. 3
3C	2C	—	—	1	Ex. 6	Ex. 2
1C	—	—	—	1	Ex. 4	
—	1C	—	—	1	Ex. 5	
—	—	—	—	1	Ex. 4	

AX, AL takes precedence left terminal connection.
AL is connected to the left terminal in preference to the AX.
1 row terminal block is used in preference to 2 rows the terminal blocks.
Contact TERASAKI for the combination other than the left.

Left terminal arrangement

Ex.1	Ex.2	Ex.3		Ex.4	Ex.5	Ex.6		Ex.7		Ex.8	
AXa2	ALa1		ALa1	PALa	ALa1	PALa	ALa1	PALa	AXa2	PALa	ALa1
AXb2	ALb1		ALb1		ALb1		ALb1		AXb2		ALb1
AXc2	ALc1		ALc1	PALc	ALc1	PALc	ALc1	PALc	AXc2	PALc	ALc1
AXc1	AXc1	AXc2	AXc1	AXc1	PALc	AXc2	AXc1		AXc1		AXc1
AXb1	AXb1	AXb2	AXb1	AXb1		AXb2	AXb1		AXb1		AXb1
AXa1	AXa1	AXa2	AXa1	AXa1	PALa	AXa2	AXa1		AXa1		AXa1

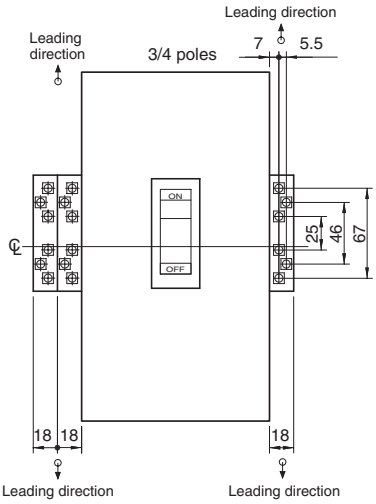

Right terminal arrangement

Ex.1	Ex.2	Ex.3	Ex.4	Ex.5	Ex.6
ALa2	ALa2	AXa3	AXa3	AXa2	AXa2
ALb2	ALb2	AXb3	AXb3	AXb2	AXb2
ALc2	ALc2	AXc3	AXc3	AXc2	AXc2
AXc2	AXc3	C2	D2	C2	D2
AXb2	AXb3				
AXa2	AXa3	C1	D1	C1	D1

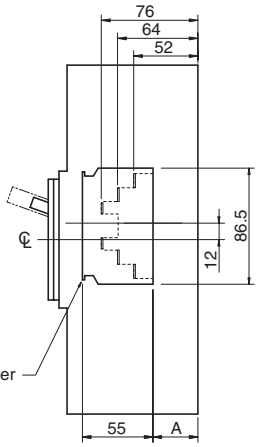

Dimensions, mm

Frame size (A)	Types of breakers Electronic MCCB	A
400	**PS400-NE/GE, PH400-CF, PH400-CE**	36
600, 630	**PS630-NE/GE, PH630-CF, PH630-CE**	36

Notes:
1) Tightening torque of M3.5 terminal screws: 0.9 – 1.2 Nm
2) Applicable wire size: 2.0mm² max
3) The following SMART MCCB cables cannot be connected to the terminal blocks.
Zone selective interlocking
Optional alarm output contact
Control power supply
Communication module

9. Terminal blocks (TF)

18mm width 6 terminals
Vertical leading type (T2TFX0) with 630/800/1000A frame MCCB

Mounting position/ typical terminal arrangement

Left terminal arrangement

Ex.1	Ex.2	Ex.3		Ex.4		Ex.5		Ex.6		
AXa2	ALa1		AXa2	AXa3	ALa1	AXa4	AXa2		AXa3	ALa1
AXb2	ALb1		AXb2	AXb3	ALb1	AXb4	AXb2		AXb3	ALb1
AXc2	ALc1		AXc2	AXc3	ALc1	AXc4	AXc2		AXc3	ALc1
AXc1	AXc1	AXc3	AXc1	AXc2	AXc1	AXc3	AXc1	AXc4	AXc2	AXc1
AXb1	AXb1	AXb3	AXb1	AXb2	AXb1	AXb3	AXb1	AXb4	AXb2	AXb1
AXa1	AXa1	AXa3	AXa1	AXa2	AXa1	AXa3	AXa1	AXa4	AXa2	AXa1

Dimensions, mm

Frame size (A)	Types of breakers MCCB	A	B	C	D
600, 630, 800, 1000	**S630-CF/NF/NE/GN, S800-CF/NF/RF/PF/NN, S800-NE/RE/PE, S1000-CE/NN**	33.5	51.5	63.5	75.5
	H630-NE, L630-NE, H800-NE, L800-NE,	70.5	88.5	100.5	112.5

Notes:
1) Tightening torque of M3.5 terminal screws: 0.9 – 1.2 Nm
2) Applicable wire size: 2.0mm² max
3) *k*, *ℓ* are the terminals to connect to the CT for a separate neutral wire. Separate neutral wire CTs are required for 3-phase 4-wire system, when a 3-pole circuit breaker with ground fault trip function is used.

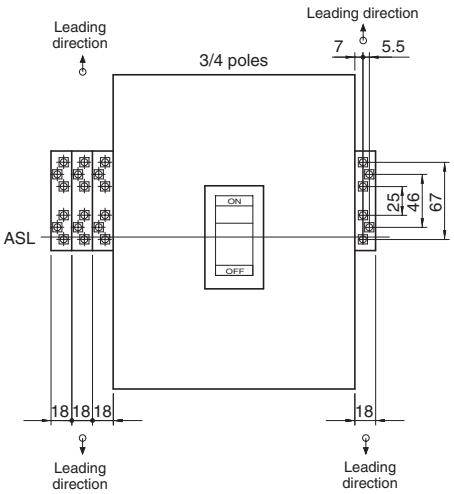

Note 4)

Right terminal arrangement

Ex.1	Ex.2	Ex.3	Ex.4
PALa	PALa	ALa2	ALa2
k	*k*	ALb2	ALb2
PALc	PALc	ALc2	ALc2
C2	D2	C2	D2
ℓ	*ℓ*		
C1	D1	C1	D1

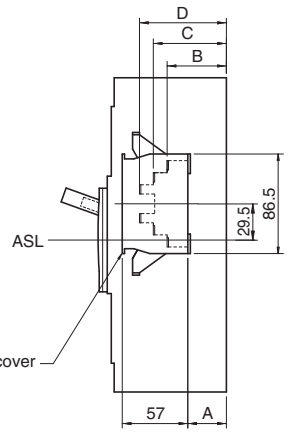

4) In the case of providing pre-trip alarm terminals (PALa, PALc) to the terminal block,OCR controller will be installed external to the breaker.
5) Contact to TERASAKI for the combination other than the above.

18mm width 6 terminals
Vertical leading type (T2TFX0) with 630/800A frame MCCB/ELCB

Mounting position/ typical terminal arrangement

Left terminal arrangement

Ex.1	Ex.2	Ex.3		Ex.4		Ex.5		Ex.6		
AXa2	ALa1		AXa2	AXa3	ALa1	AXa4	AXa2		AXa3	ALa1
AXb2	ALb1		AXb2	AXb3	ALb1	AXb4	AXb2		AXb3	ALb1
AXc2	ALc1		AXc2	AXc3	ALc1	AXc4	AXc2		AXc3	ALc1
AXc1	AXc1	AXc3	AXc1	AXc2	AXc1	AXc3	AXc1	AXc4	AXc2	AXc1
AXb1	AXb1	AXb3	AXb1	AXb2	AXb1	AXb3	AXb1	AXb4	AXb2	AXb1
AXa1	AXa1	AXa3	AXa1	AXa2	AXa1	AXa3	AXa1	AXa4	AXa2	AXa1

Dimensions, mm

Frame size (A)	Types of breakers MCCB	ELCB	A	B	C	D
600, 630, 800	**ZAS630-CF *3) *4) *5)**	**ZS630-CF *5)**	33.5	51.5	63.5	75.5
	ZAS630-NF *3) *4) *5)	**ZS630-NF *5)**				
	ZAS800-CF *3) *4) *5)	**ZS800-CF *5)**				
	ZAS800-NF *3) *4) *5)	**ZS800-NF *5)**				
	NS630-NF *5)					
	NS800-NF *5)					

Notes:
1) Tightening torque of M3.5 terminal screws: 0.9 – 1.2 Nm
2) Applicable wire size: 2.0mm² max
3) If the terminal blocks are applied for internal accessories as standard, ELa, ELb, ELc (earth leakage alarm output terminal) is also applied the terminal block.
4) Ra1, Ra2 (remote reset terminal) can be used.
5) TL (test lead terminal) can be used.

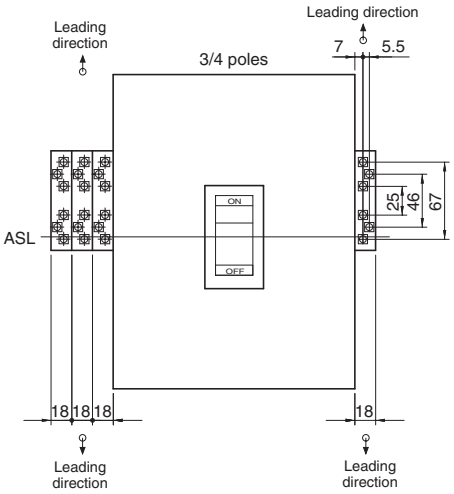

Right terminal arrangement

Ex.1	Ex.2	Ex.3		Ex.4	
ELa		ELa		ELa	
ELb		ELb		ELb	
ELc		ELc		ELc	
C2	TL	Ra1	TL	C2	Ra1
C1	TL	Ra2	TL	C1	Ra2
①	②	①		①	

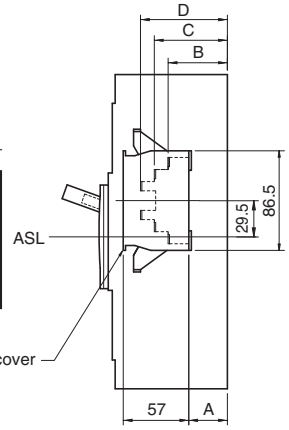

6) Contact to TERASAKI for the combination other than the above.

Horizontal leading type (LTF) with 1250/1600A frame MCCB

Mounting position/typical terminal arrangement

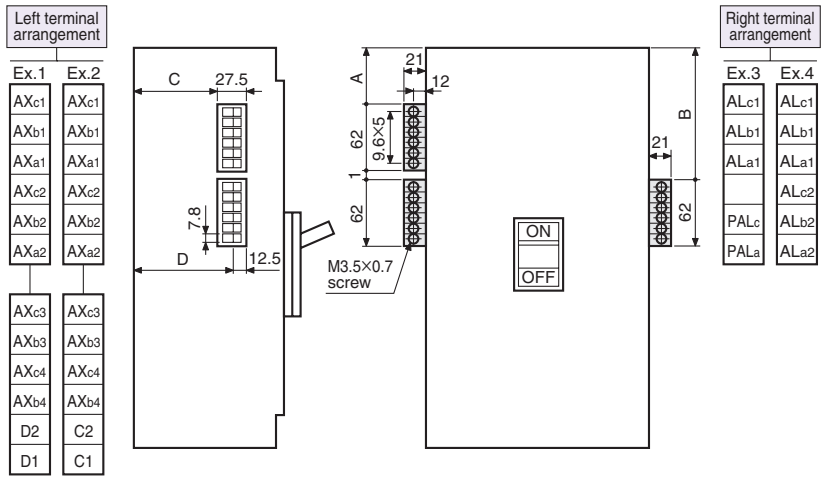

Dimensions, mm

Frame size (A)	Types of breakers	A	B	C	D
1250	**S1250-NE/GE/NN**	51	114 (124)	57	72
1600	**S1600-NE/NN**	51	114 (124)	77	92

Notes:

1) Values in parentheses applies to 4-pole breakers.
2) Tightening torque of M3.5 terminal screws: 0.9 – 1.2 Nm
3) Applicable wire size: 2.0mm² max × 2
4) Contact to TERASAKI for the combination other than the left.

9. Terminal blocks (TF)

Horizontal leading type (LTF) with 1000 to 3200A frame MCCB

Mounting position/typical terminal arrangement

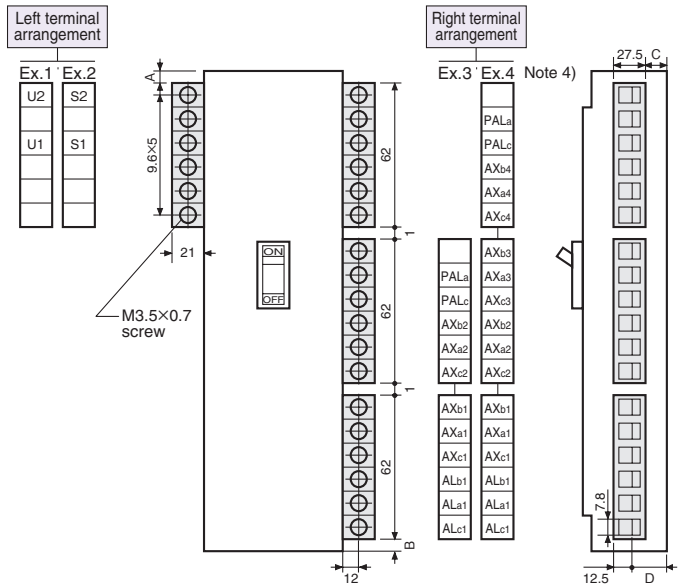

Dimensions, mm

Frame size (A)	Types of breakers	A	B	C	D
1000, 1200	**TL-1000NE, TL-1200NE**	51	194 (184)	77	92
2000	**XS2000NE, XS2000NN**	54	208	100	115
2500	**XS2500NE, XS2500NN**	54	208	100	115
3200	**XS3200NE, XS3200NN**	54	208	100	115

Notes:

1) Values in parentheses applies to 4-pole breakers.
2) Tightening torque of M3.5 terminal screws: 0.9 – 1.2 Nm
3) Applicable wire size: 2.0mm^2 max × 2
4) The example terminal arrangement applies only to types XS2000NE, XS2500NE and XS3200NE.
5) Contact to TERASAKI for the combination other than the left.

10. Flush-mounted (flush plate) auxiliary circuit terminal block (TB)

Applicable breakers

Frame size (A)	Types of breakers	
	MCCB	ELCB
30	**E30-NM, S30-NM**	**ZE30-NM, ZS30-NM**
50	**E50-NM, S50-NM**	**ZE50-NM, ZS50-CM**
100	**E100-NM**	**ZE100-NM**

The terminal arrangement below is the auxiliary circuit terminal arrangement when viewing the flush-mounted circuit breaker from the rear side.
The terminals of the accessories shown in ① to ㉔ in the table are connected to the terminals numbered ① to ㉔ on the rear of the circuit breaker.

HL : Handle Frame Centre Line
℄ : Handle Centre Line

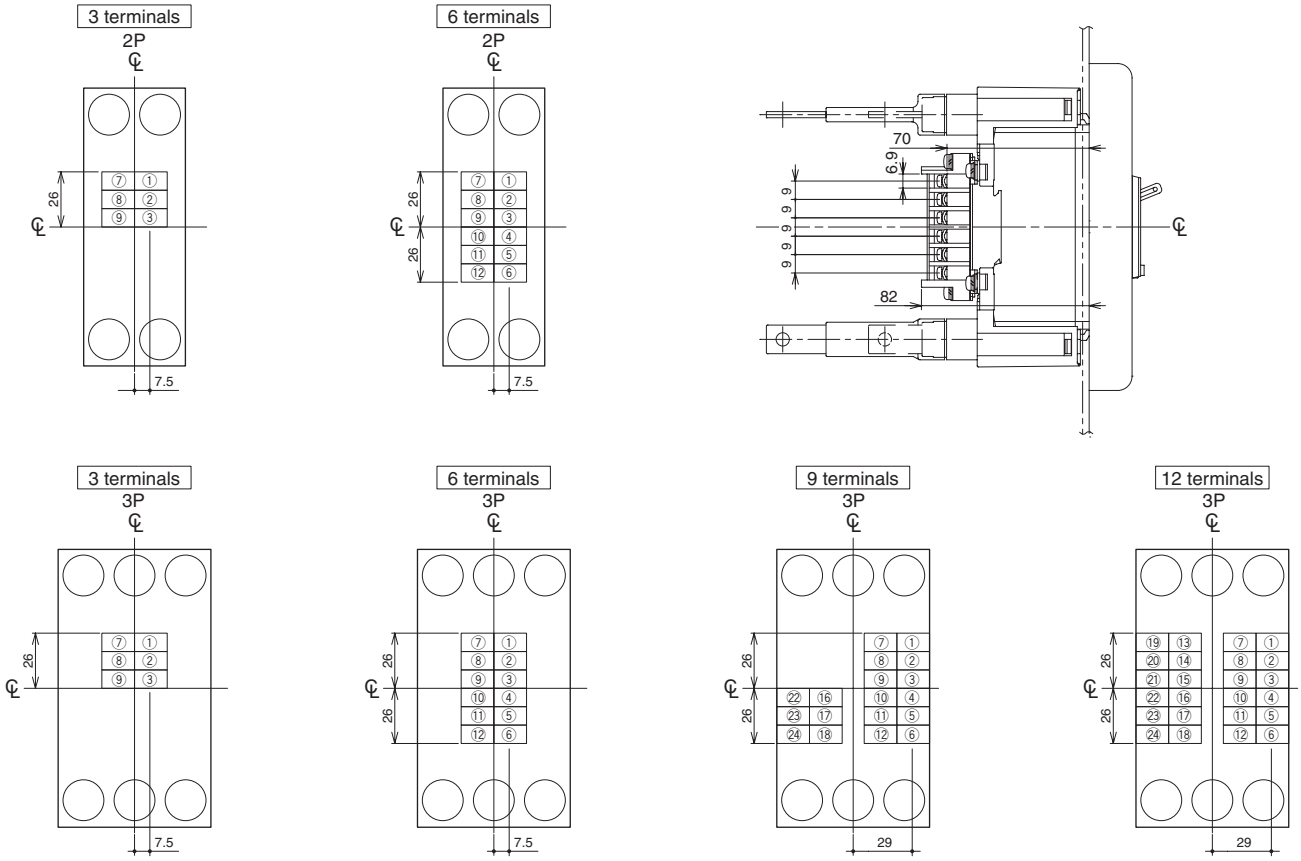

2 poles breaker

Terminal block	Combinations of accessories	Terminal code					
		⑦	⑧	⑨	⑩	⑪	⑫
3 terminals	AX1C (R)	AXaR	AXbR	AXcR			
	AL1C (R)	ALaR	ALbR	ALcR			
	SH	C1	C2				
	TL	TL1	TL2				
6 terminals	AX1C+AL1C (R)	AXaR	AXbR	AXcR	ALaR	ALbR	ALcR
	AX1C+TL	AXaR	AXbR	AXcR		TL1	TL2
	AL1C+TL	ALaR	ALbR	ALcR		TL1	TL2

3 poles breaker

Terminal block	Combinations of accessories	Terminal code																	
		①	②	③	④	⑤	⑥	⑦	⑧	⑨	⑩	⑪	⑫	⑲	⑳	㉑	㉒	㉓	㉔
3 terminals	AX1C (L)	AXaL	AXbL	AXcL															
	AL1C (L)	ALaL	ALbL	ALcL															
	AX1C (R)							AXaR	AXbR	AXcR									
	AL1C (R)							ALaR	ALbR	ALcR									
	SH							C1	C2										
	TL							TL1	TL2										
6 terminals	AX1C+AL1C (L)	AXaL	AXbL	AXcL	ALaL	ALbL	ALcL												
	AX1C+AL1C (R)							AXaR	AXbR	AXcR	ALaR	ALbR	ALcR						
	AX2C	AXaL	AXbL	AXcL	AXaR	AXbR	AXcR												
	AL2C	ALaL	ALbL	ALcL	ALaR	ALbR	ALcR												
	AX1C+SH	AXaL	AXbL	AXcL		C1	C2												
	AL1C+SH	ALaL	ALbL	ALcL		C1	C2												
	AX1C+TL	AXaL	AXbL	AXcL		TL1	TL2												
	AL1C+TL	ALaL	ALbL	ALcL		TL1	TL2												
9 terminals	AX2C+AL1C	AXaL	AXbL	AXcL	ALaL	ALbL	ALcL										AXaR	AXbR	AXcR
	AX1C+AL2C	AXaL	AXbL	AXcL	ALaL	ALbL	ALcL										ALaR	ALbR	ALcR
	AX1C+AL1C+SH	AXaL	AXbL	AXcL	ALaL	ALbL	ALcL										C1	C2	
	AX1C+AL1C+TL	AXaL	AXbL	AXcL	ALaL	ALbL	ALcL										TL1	TL2	
12 terminals	AX2C+AL2C	AXaL	AXbL	AXcL	ALaL	ALbL	ALcL							AXaR	AXbR	AXcR	ALaR	ALbR	ALcR

10. Flush-mounted (flush plate) auxiliary circuit terminal block (TB)

Applicable breakers

Frame size (A)	Types of breakers MCCB
30, 50	**S50-SF, PE30-NF/NN, PE50-NF/NN, PS30-NF, PS50-NF**
60, 100, 125	**S125-SF/SN, PE60-NF, PE125-NF/NN, PS60-NF**

The terminal arrangement below is the auxiliary circuit terminal arrangement when viewing the flush-mounted circuit breaker from the rear side.
The terminals of the accessories shown in ① to ㉔ in the table are connected to the terminals numbered ① to ㉔ on the rear of the circuit breaker.

⊞ : Handle Frame Centre Line
℄ : Handle Centre Line

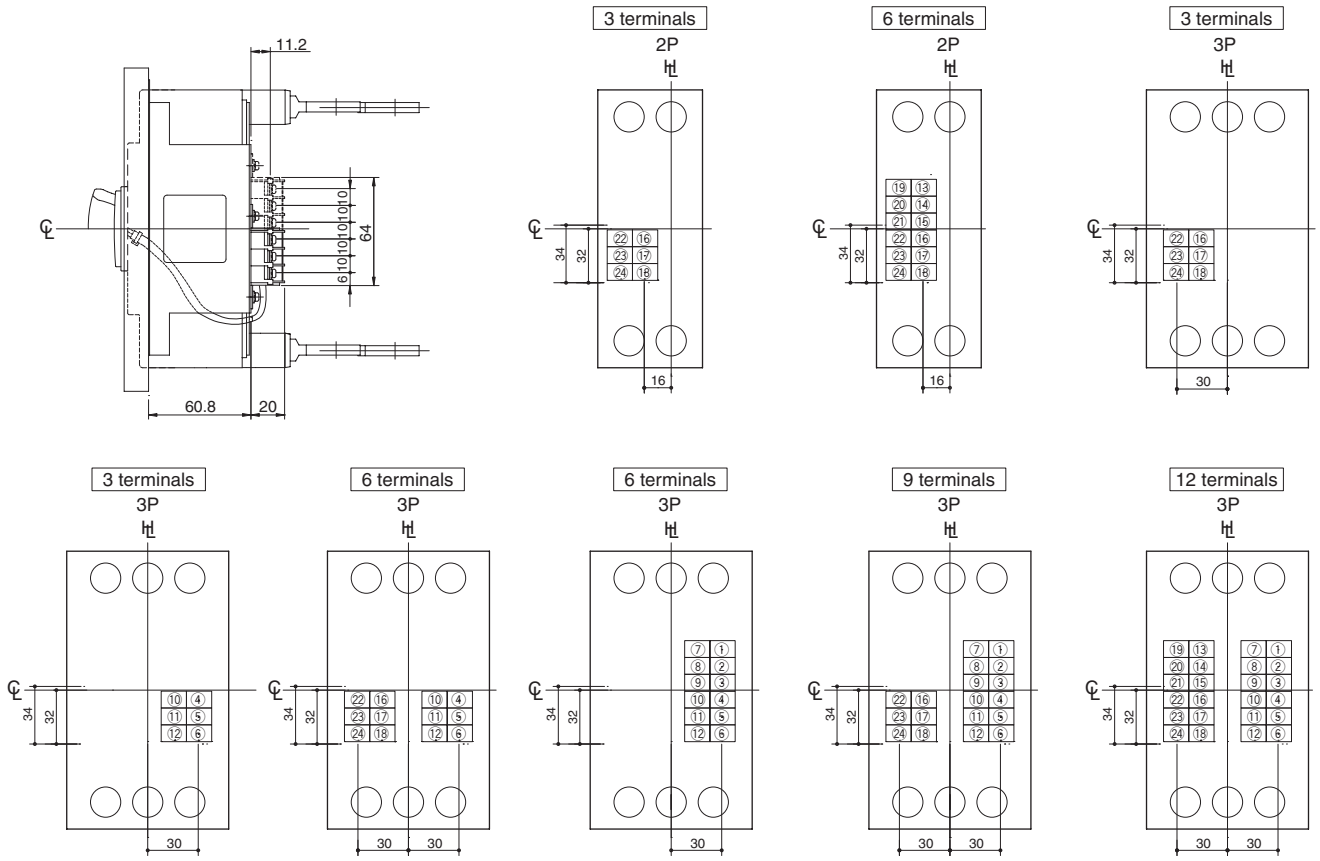

2 poles breaker

Terminal block	Combinations of accessories	Terminal code ①	②	③	④	⑤	⑥	⑲	⑳	㉑	㉒	㉓	㉔
3 terminals	AX1C										AXb1	AXa1	AXc1
	AL1C										ALb1	ALa1	ALc1
	SH										C1		C2
	UV										D1		D2
6 terminals	AX2C							AXb2	AXa2	AXc2	AXb1	AXa1	AXc1
	AX1C+AL1C							AXb1	AXa1	AXc1	ALb1	ALa1	ALc1

3 poles breaker

Terminal block	Combinations of accessories	Terminal code ①	②	③	④	⑤	⑥	⑲	⑳	㉑	㉒	㉓	㉔
3 terminals	AX1C				AXb1	AXa1	AXc1						
	AL1C				ALb1	ALa1	ALc1						
	SH										C1		C2
	UV										D1		D2
6 terminals	AX2C	AXb2	AXa2	AXc2	AXb1	AXa1	AXc1						
	AL2C				ALb1	ALa1	ALc1				ALb2	ALa2	ALc2
	AX1C+AL1C	AXb1	AXa1	AXc1	ALb1	ALa1	ALc1						
	AX1C+SH				AXb1	AXa1	AXc1				C1		C2
	AL1C+SH				ALb1	ALa1	ALc1				C1		C2
	AX1C+UV				AXb1	AXa1	AXc1				D1		D2
	AL1C+UV				ALb1	ALa1	ALc1				D1		D2
9 terminals	AX3C	AXb2	AXa2	AXc2	AXb1	AXa1	AXc1				AXb3	AXa3	AXc3
	AX1C+AL2C	AXb1	AXa1	AXc1	ALb1	ALa1	ALc1				ALb2	ALa2	ALc2
	AX2C+AL1C	AXb1	AXa1	AXc1	ALb1	ALa1	ALc1				AXb2	AXa2	AXc2
	AX2C+SH	AXb2	AXa2	AXc2	AXb1	AXa1	AXc1				C1		C2
	AX1C+AL1C+SH	AXb1	AXa1	AXc1	ALb1	ALa1	ALc1				C1		C2
	AX2C+UV	AXb2	AXa2	AXc2	AXb1	AXa1	AXc1				D1		D2
	AX1C+AL1C+UV	AXb1	AXa1	AXc1	ALb1	ALa1	ALc1				D1		D2
12 terminals	AX4C	AXb2	AXa2	AXc2	AXb1	AXa1	AXc1	AXb4	AXa4	AXc4	AXb3	AXa3	AXc3
	AX2C+AL2C	AXb1	AXa1	AXc1	ALb1	ALa1	ALc1	AXb2	AXa2	AXc2	ALb2	ALa2	ALc2
	AX3C+AL1C	AXb1	AXa1	AXc1	ALb1	ALa1	ALc1	AXb3	AXa3	AXc3	AXb2	AXa2	AXc2

Applicable breakers

Frame size (A)	Types of breakers		A (mm)
	MCCB	ELCB	
50	**ZAS50-GF**		60.8
100, 125	**S100-GF, S125-GF, ZAS100-GF, ZAS125-GF**	**ZS100-GF, ZS125-GF**	60.8
	H100-NF, H125-NF, L100-NF, L125-NF		95.8
225, 250	**ZAS225-GF, ZAS250-GF**	**ZS225-GF, ZS250-GF**	60.8
	H225-NF/NE, H250-NF, L225-NF, L250-NF		95.8

The terminal arrangement below is the auxiliary circuit terminal arrangement when viewing the flush-mounted circuit breaker from the rear side.
The terminals of the accessories shown in ① to ㉔ in the table are connected to the terminals numbered ① to ㉔ on the rear of the circuit breaker.

HL : Handle Frame Centre Line
℄ : Handle Centre Line

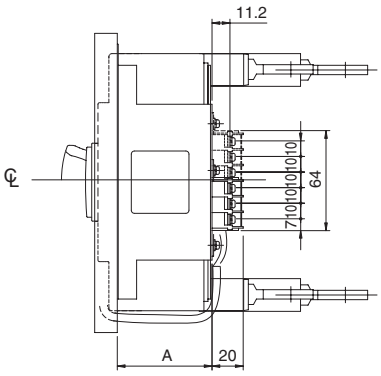

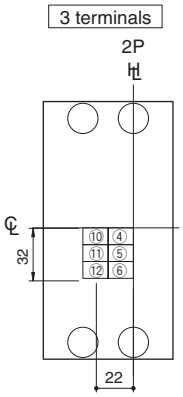

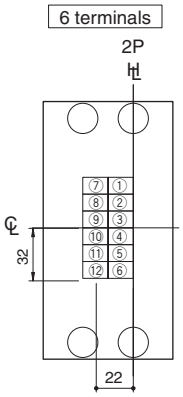

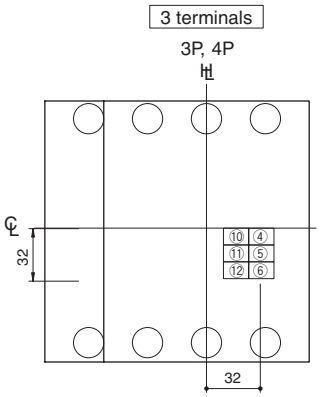

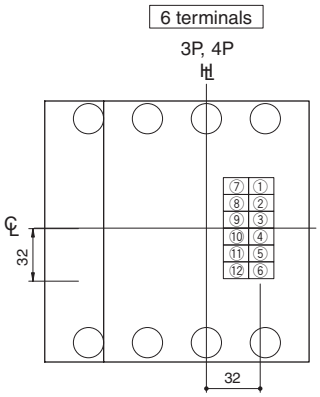

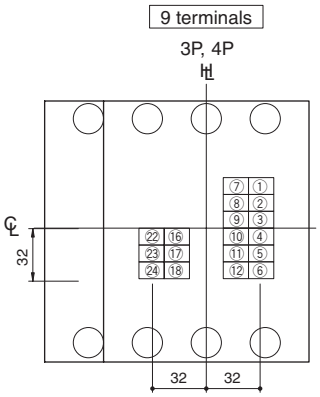

2 poles breaker

Terminal block	Combinations of accessories	Terminal code					
		⑦	⑧	⑨	⑩	⑪	⑫
3 terminals	AX1C				AXb1	AXa1	AXc1
	AL1C				ALb1	ALa1	ALc1
	SH				C1		C2
	UV				D1		D2
6 terminals	AX2C	AXb2	AXa2	AXc2	AXb1	AXa1	AXc1
	AX1C+AL1C	AXb1	AXa1	AXc1	ALb1	ALa1	ALc1

3/4 poles breaker

Terminal block	Combinations of accessories	Terminal code								
		①	②	③	④	⑤	⑥	㉒	㉓	㉔
3 terminals	AX1C				AXb1	AXa1	AXc1			
	AL1C				ALb1	ALa1	ALc1			
	SH				C1		C2			
	UV				D1		D2			
	EL1C				ELb1	ELa1	ELc1			
	TL				TL		TL			
6 terminals	AX2C	AXb2	AXa2	AXc2	AXb1	AXa1	AXc1			
	AX1C+AL1C	AXb1	AXa1	AXc1	ALb1	ALa1	ALc1			
9 terminals	AX2C+SH	AXb2	AXa2	AXc2	AXb1	AXa1	AXc1	C1		C2
	AX1C+AL1C+SH	AXb1	AXa1	AXc1	ALb1	ALa1	ALc1	C1		C2
	AX2C+UV	AXb2	AXa2	AXc2	AXb1	AXa1	AXc1	D1		D2
	AX1C+AL1C+UV	AXb1	AXa1	AXc1	ALb1	ALa1	ALc1	D1		D2
	AX1C+AL1C+EL1C	AXb1	AXa1	AXc1	ALb1	ALa1	ALc1	ELb1	ELa1	ELc1
	AX1C+AL1C+TL	AXb1	AXa1	AXc1	ALb1	ALa1	ALc1	TL		TL

10. Flush-mounted (flush plate) auxiliary circuit terminal block (TB)

Applicable breakers

Frame size (A)	Types of breakers		A (mm)
	MCCB	ELCB	
30, 50	PE50-NFZ, PS50-NFZ	ZS50-SF, PZE30-NF, PZE50-NF, PZS30-NF, PZS50-NF	30
60, 100, 125	ZAS125-SF, PE125-NFZ	ZS100-SM, ZS125-SF, PZE60-NF, PZE125-NF, PZS60-NF	30
225, 250	ZAE250-SF, ZAS250-SF	ZE250-SF, ZS250-SF, ZS250-SM	32

The terminal arrangement below is the auxiliary circuit terminal arrangement when viewing the flush-mounted circuit breaker from the rear side.
The terminals of the accessories shown in ① to ㉔ in the table are connected to the terminals numbered ① to ㉔ on the rear of the circuit breaker.

HL : Handle Frame Centre Line
℄ : Handle Centre Line

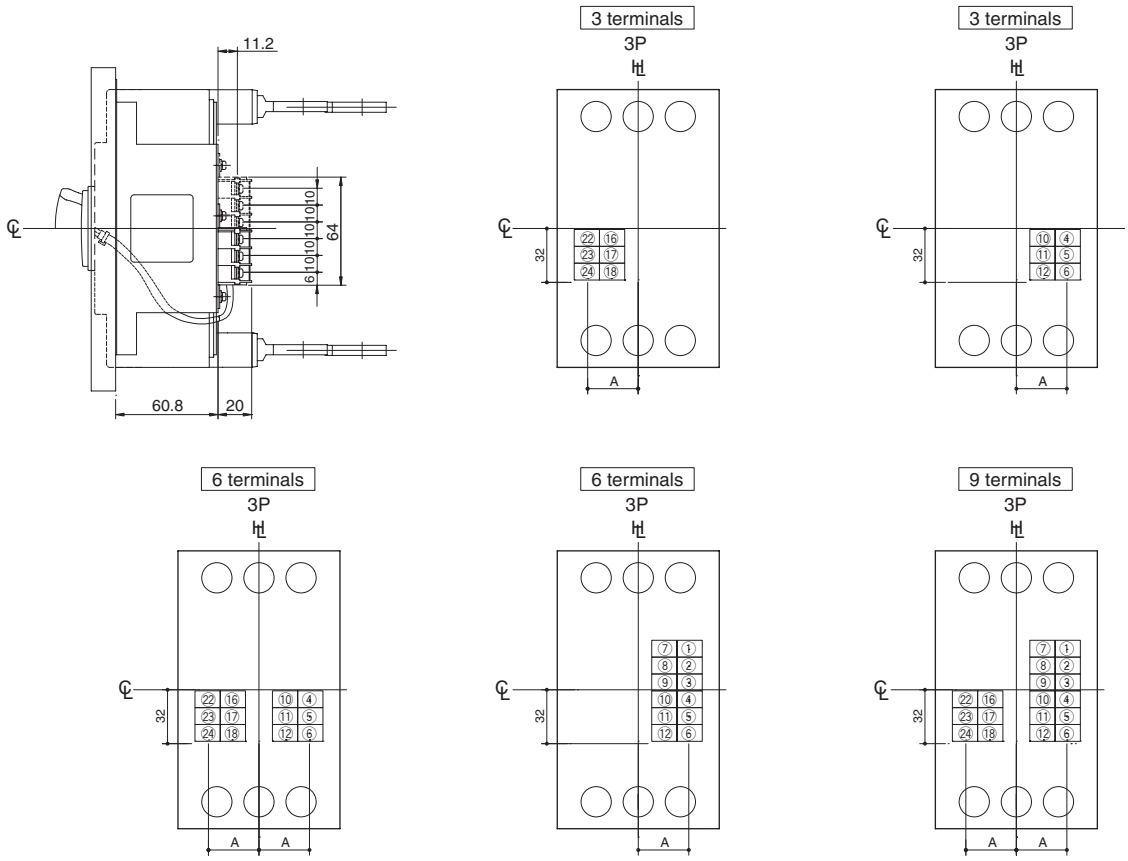

3 poles breaker

Terminal block	Combinations of accessories	Terminal code								
		①	②	③	④	⑤	⑥	㉒	㉓	㉔
3 terminals	AX1C				AXb1	AXa1	AXc1			
	AL1C				ALb1	ALa1	ALc1			
	EL1C							ELb1	ELa1	ELc1
	TL							TL		TL
6 terminals	AX2C	AXb2	AXa2	AXc2	AXb1	AXa1	AXc1			
	AX1C+AL1C	AXb1	AXa1	AXc1	ALb1	ALa1	ALc1			
	AX1C+EL1C				AXb1	AXa1	AXc1	ELb1	ELa1	ELc1
	AL1C+EL1C				ALb1	ALa1	ALc1	ELb1	ELa1	ELc1
	AX1C+TL				AXb1	AXa1	AXc1	TL		TL
	AL1C+TL				ALb1	ALa1	ALc1	TL		TL
9 terminals	AX2C+EL1C	AXb2	AXa2	AXc2	AXb1	AXa1	AXc1	ELb1	ELa1	ELc1
	AX1C+AL1C+EL1C	AXb1	AXa1	AXc1	ALb1	ALa1	ALc1	ELb1	ELa1	ELc1
	AX2C+TL	AXb2	AXa2	AXc2	AXb1	AXa1	AXc1	TL		TL
	AX1C+AL1C+TL	AXb1	AXa1	AXc1	ALb1	ALa1	ALc1	TL		TL

Applicable breakers

Frame size (A)	Types of breakers
	MCCB
50	**PS50-PF**
100, 125	**PS125-NF/PF/NM/NN, PS125-NE/PE**

The terminal arrangement below is the auxiliary circuit terminal arrangement when viewing the flush-mounted circuit breaker from the rear side.
The terminals of the accessories shown in ① to ㉔ in the table are connected to the terminals numbered ① to ㉔ on the rear of the circuit breaker.

⊞ : Handle Frame Centre Line
℄ : Handle Centre Line

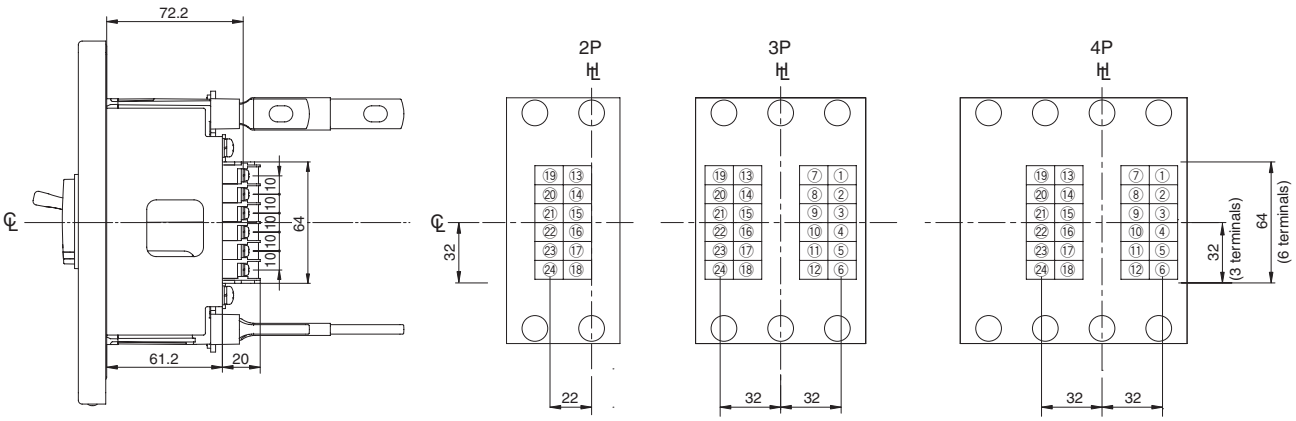

2 poles breaker

Terminal block	Combinations of accessories	Terminal code					
		⑲	⑳	㉑	㉒	㉓	㉔
3 terminals	AX1C				AXb1	AXa1	AXc1
	AL1C				ALb1	ALa1	ALc1
	SH				C1		C2
	UV				D1		D2
6 terminals	AX2C	AXb2	AXa2	AXc2	AXb1	AXa1	AXc1
	AX1C+AL1C	AXb1	AXa1	AXc1	ALb1	ALa1	ALc1

3/4 poles breaker

Terminal block	Combinations of accessories	Terminal code											
		①	②	③	④	⑤	⑥	⑲	⑳	㉑	㉒	㉓	㉔
3 terminals	AX1C				AXb1	AXa1	AXc1						
	AL1C				ALb1	ALa1	ALc1						
	SH										C1		C2
	UV										D1		D2
	PTA	PALa		PALc									
6 terminals	AX2C	AXb2	AXa2	AXc2	AXb1	AXa1	AXc1						
	AL2C				ALb1	ALa1	ALc1				ALb2	ALa2	ALc2
	AX1C+AL1C	AXb1	AXa1	AXc1	ALb1	ALa1	ALc1						
	AX1C+SH				AXb1	AXa1	AXc1				C1		C2
	AL1C+SH				ALb1	ALa1	ALc1				C1		C2
	AX1C+UV				AXb1	AXa1	AXc1				D1		D2
	AL1C+UV				ALb1	ALa1	ALc1				D1		D2
	AX1C+PTA	PALa		PALc	AXb1	AXa1	AXc1						
	AL1C+PTA	PALa		PALc	ALb1	ALa1	ALc1						
9 terminals	AX3C	AXb2	AXa2	AXc2	AXb1	AXa1	AXc1				AXb3	AXa3	AXc3
	AX1C+AL2C	AXb1	AXa1	AXc1	ALb1	ALa1	ALc1				ALb2	ALa2	ALc2
	AX2C+AL1C	AXb1	AXa1	AXc1	ALb1	ALa1	ALc1				AXb2	AXa2	AXc2
	AX2C+SH	AXb2	AXa2	AXc2	AXb1	AXa1	AXc1				C1		C2
	AX1C+AL1C+SH	AXb1	AXa1	AXc1	ALb1	ALa1	ALc1				C1		C2
	AX2C+UV	AXb2	AXa2	AXc2	AXb1	AXa1	AXc1				D1		D2
	AX1C+AL1C+UV	AXb1	AXa1	AXc1	ALb1	ALa1	ALc1				D1		D2
	AX1C+AL1C+PTA	PALa		PALc	ALb1	ALa1	ALc1				AXb1	AXa1	AXc1
	AX1C+SH+PTA	PALa		PALc	AXb1	AXa1	AXc1				C1		C2
	AL1C+UV+PTA	PALa		PALc	ALb1	ALa1	ALc1				D1		D2
12 terminals	AX4C	AXb2	AXa2	AXc2	AXb1	AXa1	AXc1	AXb4	AXa4	AXc4	AXb3	AXa3	AXc3
	AX2C+AL2C	AXb1	AXa1	AXc1	ALb1	ALa1	ALc1	AXb2	AXa2	AXc2	ALb2	ALa2	ALc2
	AX3C+AL1C	AXb1	AXa1	AXc1	ALb1	ALa1	ALc1	AXb3	AXa3	AXc3	AXb2	AXa2	AXc2
	AX1C+AL1C+SH+PTA	PALa		PALc	ALb1	ALa1	ALc1	AXb1	AXa1	AXc1	C1		C2
	AX1C+AL1C+UV+PTA	PALa		PALc	ALb1	ALa1	ALc1	AXb1	AXa1	AXc1	D1		D2
	AX1C+AL2C+PTA	PALa		PALc	ALb1	ALa1	ALc1	AXb1	AXa1	AXc1	ALb2	ALa2	ALc2
	AX2C+SH+PTA	PALa		PALc	AXb1	AXa1	AXc1	AXb2	AXa2	AXc2	C1		C2
	AX2C+UV+PTA	PALa		PALc	AXb1	AXa1	AXc1	AXb2	AXa2	AXc2	D1		D2
	AX2C+AL1C+PTA	PALa		PALc	ALb1	ALa1	ALc1	AXb2	AXa2	AXc2	AXb1	AXa1	AXc1
	AX3C+PTA	PALa		PALc	AXb1	AXa1	AXc1	AXb3	AXa3	AXc3	AXb2	AXa2	AXc2

10. Flush-mounted (flush plate) auxiliary circuit terminal block (TB)

Applicable breakers

Frame size (A)	Types of breakers MCCB
225, 250	**E250-SF, S250-SF, S250-SM/SN**
	PS250-PF/NN, PS250-NE/PE

The terminal arrangement below is the auxiliary circuit terminal arrangement when viewing the flush-mounted circuit breaker from the rear side.
The terminals of the accessories shown in ① to ㉔ in the table are connected to the terminals numbered ① to ㉔ on the rear of the circuit breaker.

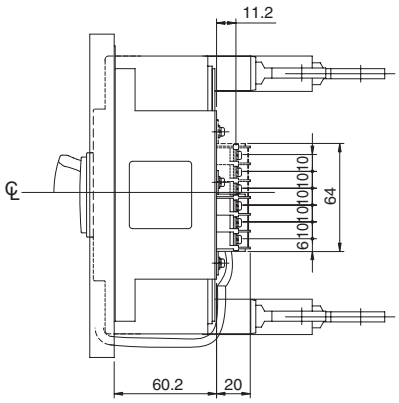

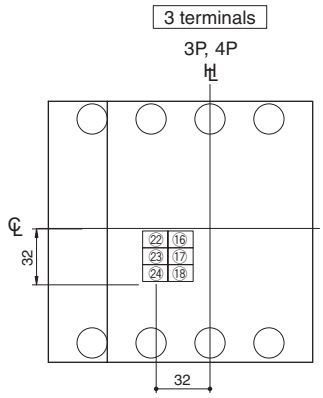

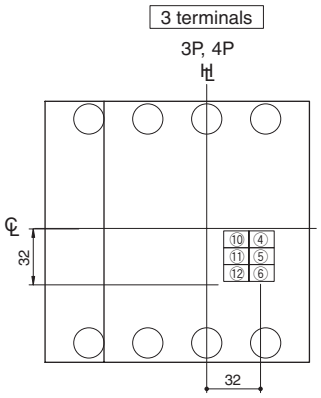

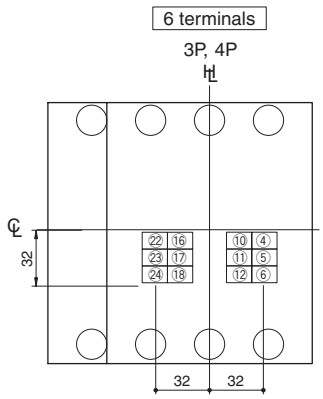

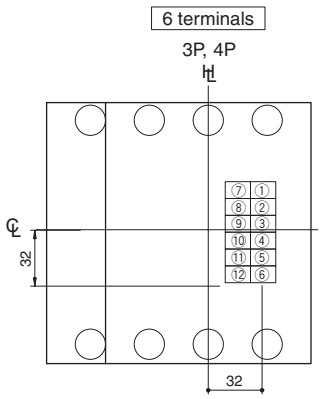

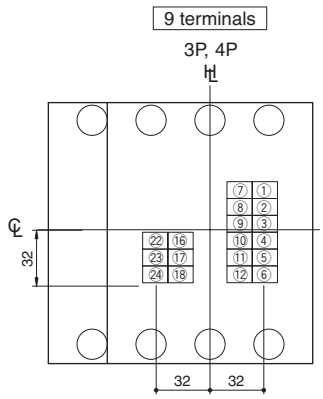

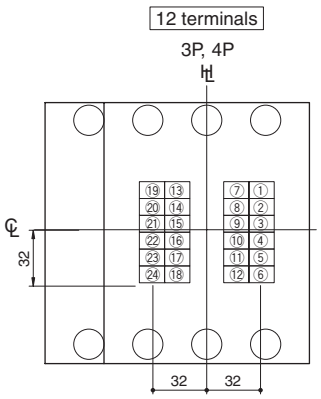

3/4 poles breaker

Terminal block	Combinations of accessories	Terminal code ①	②	③	④	⑤	⑥	⑲	⑳	㉑	㉒	㉓	㉔
3 terminals	AX1C				AXb1	AXa1	AXc1						
	AL1C				ALb1	ALa1	ALc1						
	SH										C1		C2
	UV										D1		D2
	PTA	PALa		PALc									
6 terminals	AX2C	AXb2	AXa2	AXc2	AXb1	AXa1	AXc1						
	AL2C				ALb1	ALa1	ALc1				ALb2	ALa2	ALc2
	AX1C+AL1C	AXb1	AXa1	AXc1	ALb1	ALa1	ALc1						
	AX1C+SH				AXb1	AXa1	AXc1				C1		C2
	AL1C+SH				ALb1	ALa1	ALc1				C1		C2
	AX1C+UV				AXb1	AXa1	AXc1				D1		D2
	AL1C+UV				ALb1	ALa1	ALc1				D1		D2
	AX1C+PTA	PALa		PALc	AXb1	AXa1	AXc1						
	AL1C+PTA	PALa		PALc	ALb1	ALa1	ALc1						
9 terminals	AX3C	AXb2	AXa2	AXc2	AXb1	AXa1	AXc1				AXb3	AXa3	AXc3
	AX1C+AL2C	AXb1	AXa1	AXc1	ALb1	ALa1	ALc1				ALb2	ALa2	ALc2
	AX2C+AL1C	AXb1	AXa1	AXc1	ALb1	ALa1	ALc1				AXb2	AXa2	AXc2
	AX2C+SH	AXb2	AXa2	AXc2	AXb1	AXa1	AXc1				C1		C2
	AX1C+AL1C+SH	AXb1	AXa1	AXc1	ALb1	ALa1	ALc1				C1		C2
	AX2C+UV	AXb2	AXa2	AXc2	AXb1	AXa1	AXc1				D1		D2
	AX1C+AL1C+UV	AXb1	AXa1	AXc1	ALb1	ALa1	ALc1				D1		D2
	AX1C+AL1C+PTA	PALa		PALc	ALb1	ALa1	ALc1				AXb1	AXa1	AXc1
	AX1C+SH+PTA	PALa		PALc	AXb1	AXa1	AXc1				C1		C2
	AL1C+UV+PTA	PALa		PALc	ALb1	ALa1	ALc1				D1		D2
12 terminals	AX4C	AXb2	AXa2	AXc2	AXb1	AXa1	AXc1	AXb4	AXa4	AXc4	AXb3	AXa3	AXc3
	AX2C+AL2C	AXb1	AXa1	AXc1	ALb1	ALa1	ALc1	AXb2	AXa2	AXc2	ALb2	ALa2	ALc2
	AX3C+AL1C	AXb1	AXa1	AXc1	ALb1	ALa1	ALc1	AXb3	AXa3	AXc3	AXb2	AXa2	AXc2
	AX2C+AL1C+SH	AXb1	AXa1	AXc1	ALb1	ALa1	ALc1	AXb2	AXa2	AXc2	C1		C2
	AX2C+AL1C+UV	AXb1	AXa1	AXc1	ALb1	ALa1	ALc1	AXb2	AXa2	AXc2	D1		D2
	AX1C+AL1C+SH+PTA	PALa		PALc	ALb1	ALa1	ALc1	AXb1	AXa1	AXc1	C1		C2
	AX1C+AL1C+UV+PTA	PALa		PALc	ALb1	ALa1	ALc1	AXb1	AXa1	AXc1	D1		D2
	AX1C+AL2C+PTA	PALa		PALc	ALb1	ALa1	ALc1	AXb1	AXa1	AXc1	ALb2	ALa2	ALc2
	AX2C+SH+PTA	PALa		PALc	AXb1	AXa1	AXc1	AXb2	AXa2	AXc2	C1		C2
	AX2C+UV+PTA	PALa		PALc	AXb1	AXa1	AXc1	AXb2	AXa2	AXc2	D1		D2
	AX2C+AL1C+PTA	PALa		PALc	ALb1	ALa1	ALc1	AXb2	AXa2	AXc2	AXb1	AXa1	AXc1
	AX3C+PTA	PALa		PALc	AXb1	AXa1	AXc1	AXb3	AXa3	AXc3	AXb2	AXa2	AXc2

HL : Handle Frame Centre Line
℄ : Handle Centre Line

Applicable breakers

Frame size (A)	Types of breakers MCCB
400	**PS400-CF/NF/GF/NN, PS400-NE/GE, PH400-CF/CE**
600, 630	**PS630-CF/NF/GF/NN, PS630-NE/GE, PH630-CF/CE**

The terminal arrangement below is the auxiliary circuit terminal arrangement when viewing the flush-mounted circuit breaker from the rear side.
The terminals of the accessories shown in ① to ㊱ in the table are connected to the terminals numbered ① to ㊱ on the rear of the circuit breaker.

HL : Handle Frame Centre Line
℄ : Handle Centre Line

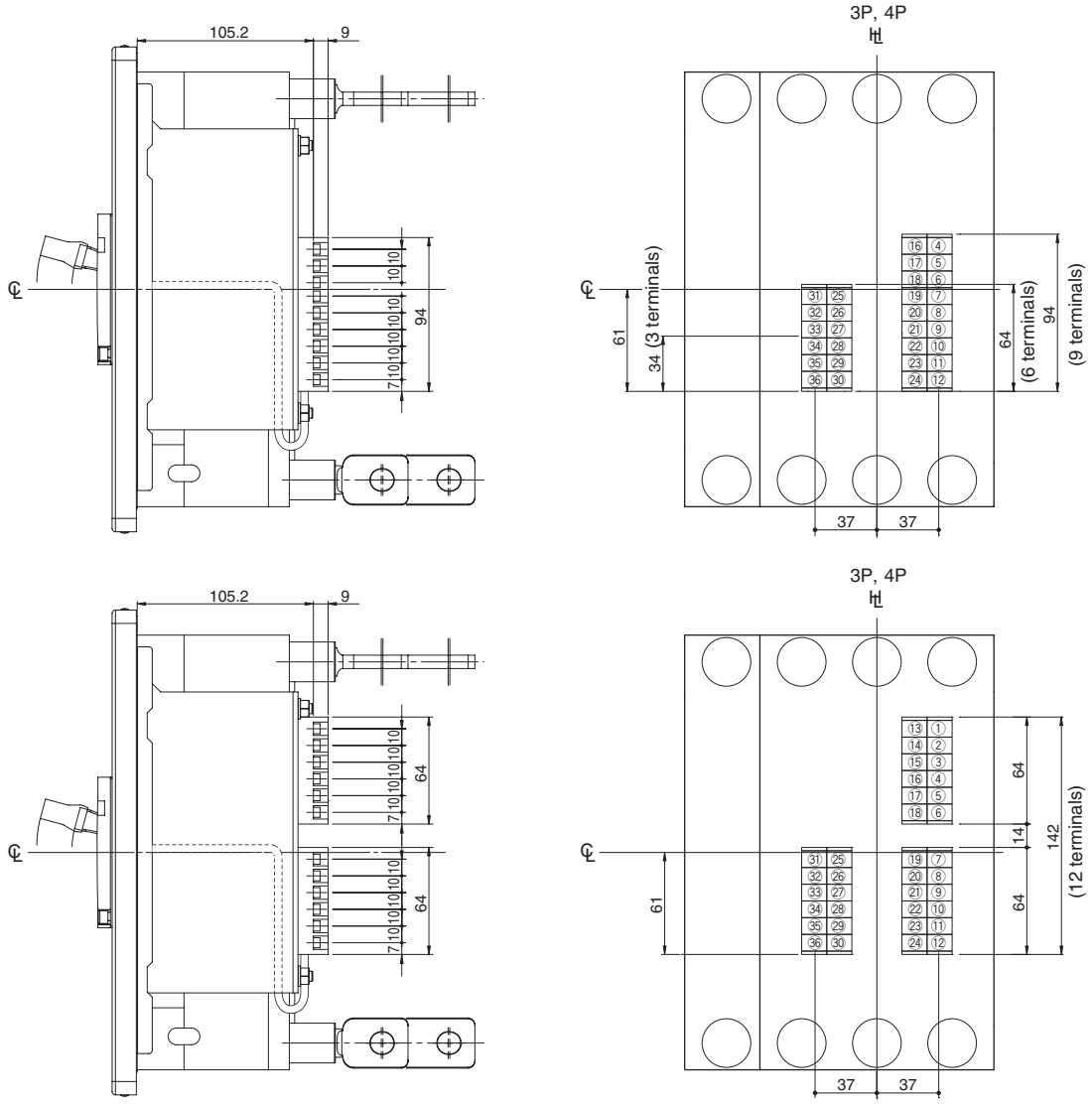

3/4 poles breaker

Terminal block	Combinations of accessories	Terminal code																	
		①	②	③	④	⑤	⑥	⑦	⑧	⑨	⑩	⑪	⑫	㉛	㉜	㉝	㉞	㉟	㊱
3 terminals	AX1C										AXb1	AXa1	AXc1						
	AL1C										ALb1	ALa1	ALc1						
	SH																C1		C2
	UV																D1		D2
	PTA																PALa		PALc
6 terminals	AX2C							AXb2	AXa2	AXc2	AXb1	AXa1	AXc1						
	AL2C										ALb1	ALa1	ALc1				ALb2	ALa2	ALc2
	AX1C+AL1C							AXb1	AXa1	AXc1	ALb1	ALa1	ALc1						
9 terminals	AX3C				AXb3	AXa3	AXc3	AXb2	AXa2	AXc2	AXb1	AXa1	AXc1						
	AX1C+AL1C+SH							AXb1	AXa1	AXc1	ALb1	ALa1	ALc1				C1		C2
	AX1C+AL1C+UV							AXb1	AXa1	AXc1	ALb1	ALa1	ALc1				D1		D2
	AX1C+AL1C+PTA							AXb1	AXa1	AXc1	ALb1	ALa1	ALc1				PALa		PALc
12 terminals	AX1C+AL2C+PTA							AXb1	AXa1	AXc1	ALb1	ALa1	ALc1	PALa		PALc	ALb2	ALa2	ALc2
	AX2C+AL1C+PTA				AXb2	AXa2	AXc2	AXb1	AXa1	AXc1	ALb1	ALa1	ALc1	PALa		PALc			
	AX3C+AL1C	AXb3	AXa3	AXc3	AXb2	AXa2	AXc2	AXb1	AXa1	AXc1	ALb1	ALa1	ALc1						
15 terminals	AX2C+AL1C+SH+PTA				AXb2	AXa2	AXc2	AXb1	AXa1	AXc1	ALb1	ALa1	ALc1	PALa		PALc	C1		C2
	AX2C+AL1C+UV+PTA				AXb2	AXa2	AXc2	AXb1	AXa1	AXc1	ALb1	ALa1	ALc1	PALa		PALc	D1		D2
	AX3C+SH+PTA				AXb3	AXa3	AXc3	AXb2	AXa2	AXc2	AXb1	AXa1	AXc1	PALa		PALc	C1		C2
	AX3C+UV+PTA				AXb3	AXa3	AXc3	AXb2	AXa2	AXc2	AXb1	AXa1	AXc1	PALa		PALc	D1		D2
18 terminals	AX3C+AL1C+SH+PTA	AXb3	AXa3	AXc3	AXb2	AXa2	AXc2	AXb1	AXa1	AXc1	ALb1	ALa1	ALc1	PALa		PALc	C1		C2
	AX3C+AL1C+UV+PTA	AXb3	AXa3	AXc3	AXb2	AXa2	AXc2	AXb1	AXa1	AXc1	ALb1	ALa1	ALc1	PALa		PALc	D1		D2
	AX3C+AL2C+PTA	AXb3	AXa3	AXc3	AXb2	AXa2	AXc2	AXb1	AXa1	AXc1	ALb1	ALa1	ALc1	PALa		PALc	ALb2	ALa2	ALc2

10. Flush-mounted (flush plate) auxiliary circuit terminal block (TB)

Applicable breakers

Frame size (A)	Types of breakers		A (mm)
	MCCB	ELCB	
400	ZAE400-NF, ZAS400-NF, ZAS400-GF, E400-NF	ZE400-NF, ZS400-NF, ZS400-GF	102.4
	H400-NE, L400-NE		139.4

The terminal arrangement below is the auxiliary circuit terminal arrangement when viewing the flush-mounted circuit breaker from the rear side.
The terminals of the accessories shown in ① to ㊱ in the table are connected to the terminals numbered ① to ㊱ on the rear of the circuit breaker.

HL : Handle Frame Centre Line
℄ : Handle Centre Line

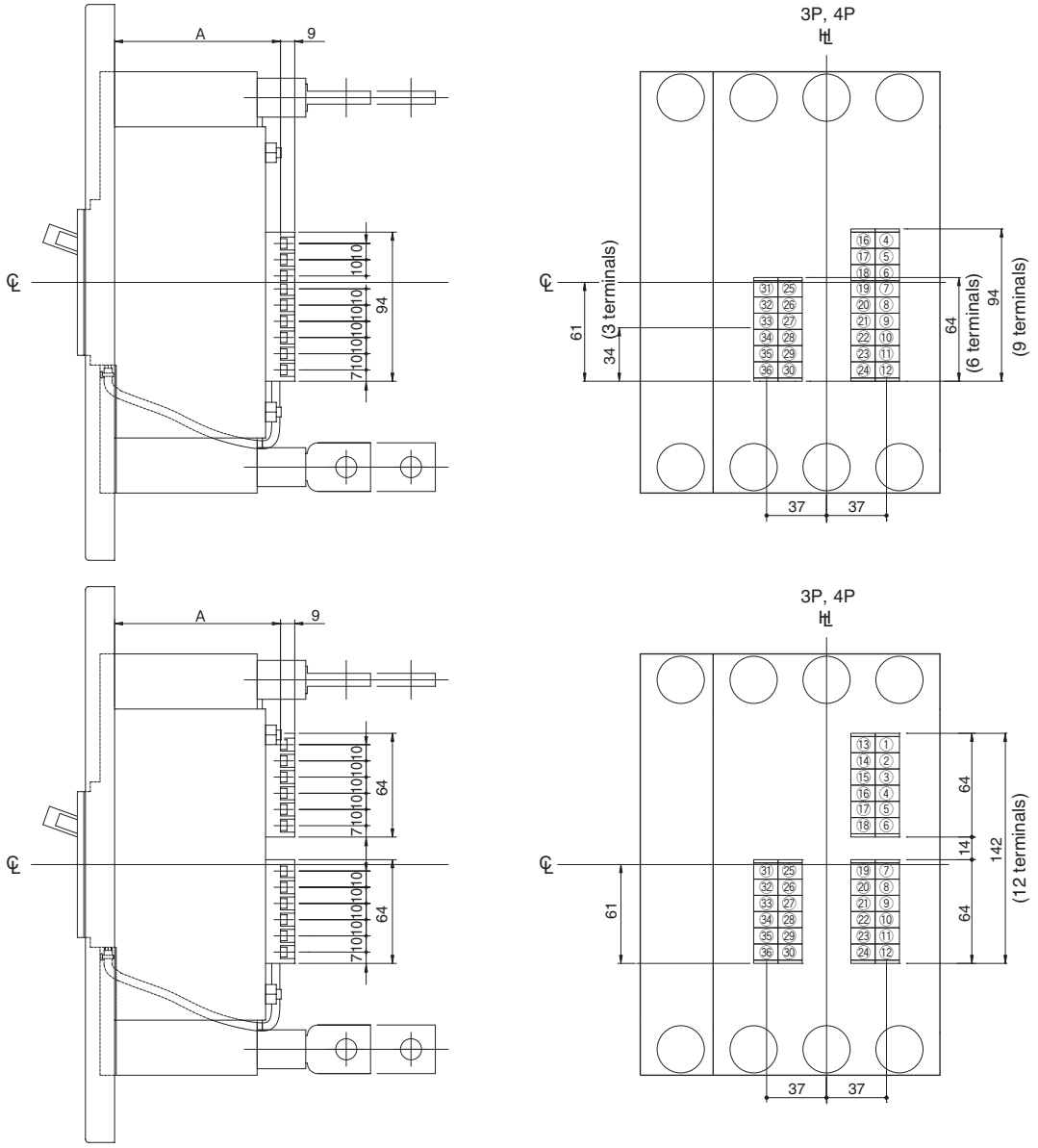

3/4 poles breaker

Terminal block	Combinations of accessories	Terminal code																	
		①	②	③	④	⑤	⑥	⑦	⑧	⑨	⑩	⑪	⑫	㉛	㉜	㉝	㉞	㉟	㊱
3 terminals	AX1C										AXb1	AXa1	AXc1						
	AL1C										ALb1	ALa1	ALc1						
	SH																C1		C2
	UV																D1		D2
	EL1C																ELb1	ELa1	ELc1
	TL																TL		TL
	PTA																PALa		PALc
6 terminals	AX2C							AXb2	AXa2	AXc2	AXb1	AXa1	AXc1						
	AX1C+AL1C							AXb1	AXa1	AXc1	ALb1	ALa1	ALc1						
	EL1C+SH													ELb1	ELa1	ELc1	C1		C2
	PTA+SH													PALa		PALc	C1		C2
	PTA+UV													PALa		PALc	D1		D2
9 terminals	AX3C				AXb3	AXa3	AXc3	AXb2	AXa2	AXc2	AXb1	AXa1	AXc1						
	AX2C+AL1C				AXb2	AXa2	AXc2	AXb1	AXa1	AXc1	ALb1	ALa1	ALc1						
12 terminals	AX3C+AL1C	AXb3	AXa3	AXc3	AXb2	AXa2	AXc2	AXb1	AXa1	AXc1	ALb1	ALa1	ALc1						

Applicable breakers

Frame size (A)	Types of breakers		A (mm)
	MCCB	ELCB	
630	**S630-CF, S630-NF, S630-NE, S630-GN, ZAS630-CF, ZAS630-NF**	**ZS630-CF, ZS630-NF**	106.2
	H630-NE, L630-NE		143.2
800	**S800-CF, S800-NF, S800-RF, S800-PF, S800-NE, S800-RE, S800-PE, S800-NN, ZAS800-CF, ZAS800-NF**	**ZS800-CF, ZS800-NF**	106.2
	H800-NE, L800-NE		143.2
1000	**S1000-CE**		106.2

The terminal arrangement below is the auxiliary circuit terminal arrangement when viewing the flush-mounted circuit breaker from the rear side.
The terminals of the accessories shown in ① to ㊱ in the table are connected to the terminals numbered ① to ㊱ on the rear of the circuit breaker.

Ⓗ : Handle Frame Centre Line
℄ : Handle Centre Line

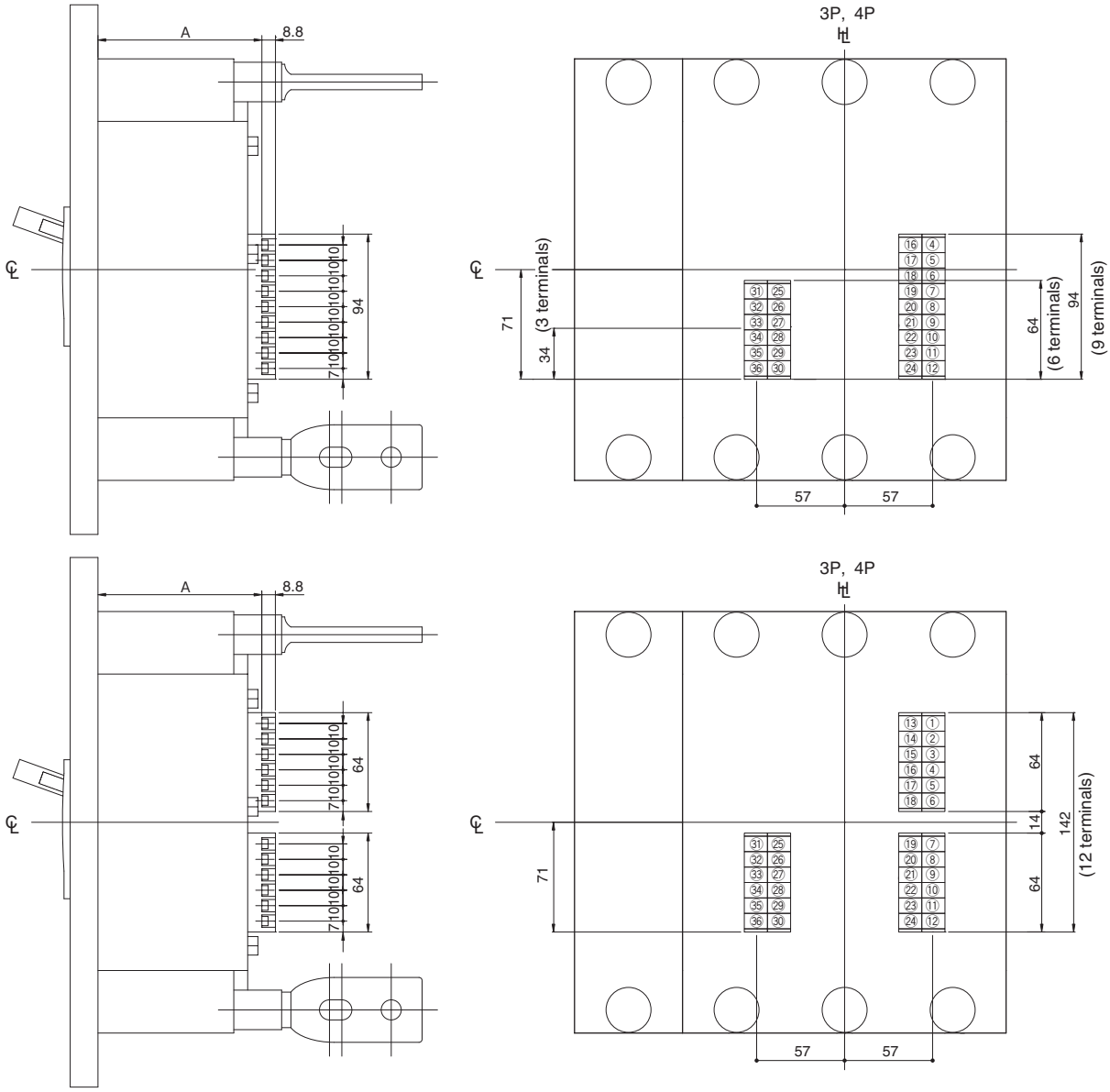

3/4 poles breaker

Terminal block	Combinations of accessories	Terminal code																	
		①	②	③	④	⑤	⑥	⑦	⑧	⑨	⑩	⑪	⑫	㉛	㉜	㉝	㉞	㉟	㊱
3 terminals	AX1C										AXb1	AXa1	AXc1						
	AL1C										ALb1	ALa1	ALc1						
	SH																C1		C2
	UV																D1		D2
	EL1C																ELb1	ELa1	ELc1
	TL																TL		TL
	PTA																PALa		PALc
6 terminals	AX2C							AXb2	AXa2	AXc2	AXb1	AXa1	AXc1						
	AX1C+AL1C							AXb1	AXa1	AXc1	ALb1	ALa1	ALc1						
	EL1C+SH													ELb1	ELa1	ELc1	C1		C2
	PTA+SH													PALa		PALc	C1		C2
	PTA+UV													PALa		PALc	D1		D2
9 terminals	AX3C				AXb3	AXa3	AXc3	AXb2	AXa2	AXc2	AXb1	AXa1	AXc1						
	AX2C+AL1C				AXb2	AXa2	AXc2	AXb1	AXa1	AXc1	ALb1	ALa1	ALc1						
12 terminals	AX3C+AL1C	AXb3	AXa3	AXc3	AXb2	AXa2	AXc2	AXb1	AXa1	AXc1	ALb1	ALa1	ALc1						

10. Flush-mounted (flush plate) auxiliary circuit terminal block (TB)

Applicable breakers

Frame size (A)	Types of breakers MCCB	Fig.
1250	**S1250-NE, S1250-GE, S1250-NN**	Fig. 1
1600	**S1600-NE, S1600-NN**	Fig. 2

The terminal arrangement below is the auxiliary circuit terminal arrangement when viewing the flush-mounted circuit breaker from the rear side.
The terminals of the accessories shown in ① to ㊱ in the table are connected to the terminals numbered ① to ㊱ on the rear of the circuit breaker.

Fig. 1

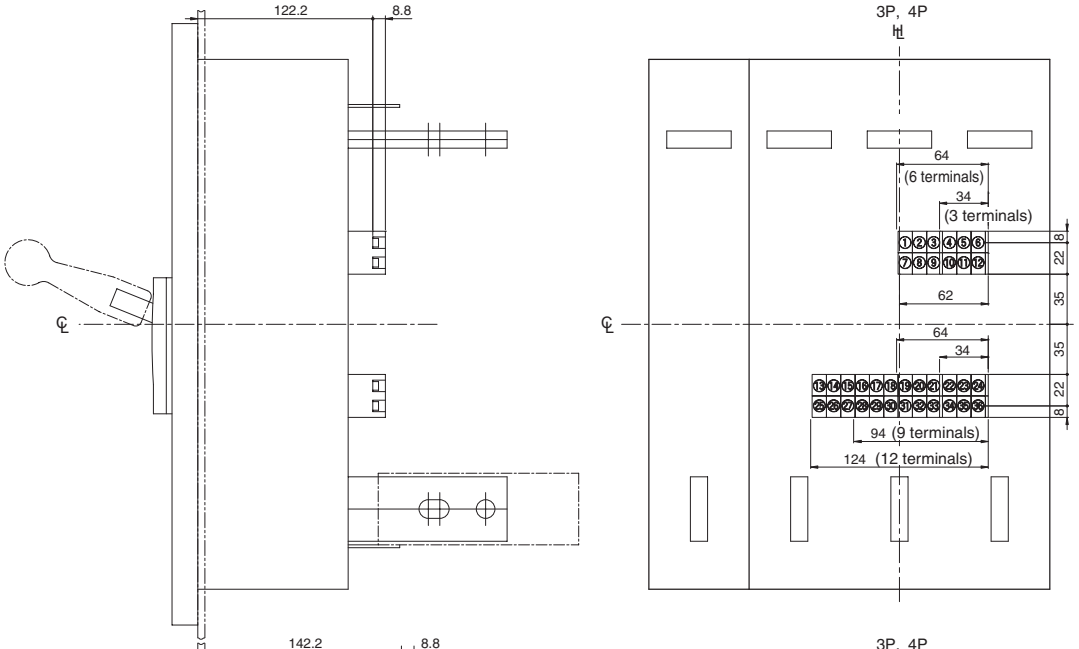

Fig. 2

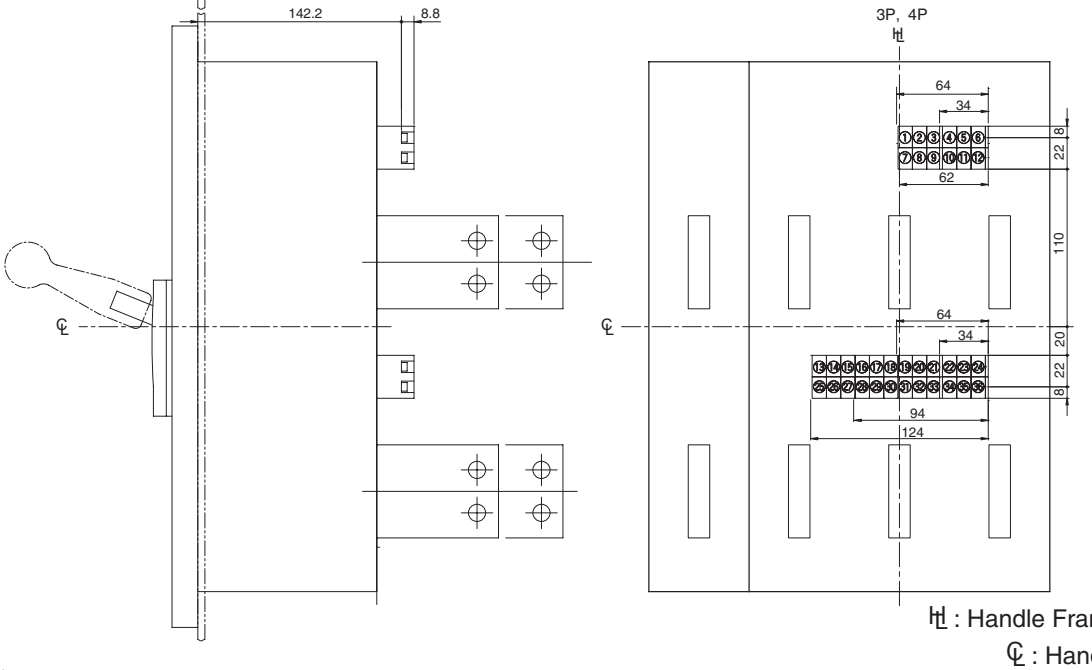

HL : Handle Frame Centre Line
℄ : Handle Centre Line

3/4 poles breaker

Terminal block	Combinations of accessories	Terminal code ①	②	③	④	⑤	⑥	㉕	㉖	㉗	㉘	㉙	㉚	㉛	㉜	㉝	㉞	㉟	㊱
3 terminals	AX1C																AXb1	AXa1	AXc1
	AL1C																ALb1	ALa1	ALc1
	SH				C1		C2												
	UV				D1		D2												
	PTA				PALa		PALc												
6 terminals	AX2C													AXb2	AXa2	AXc2	AXb1	AXa1	AXc1
	AL2C													ALb2	ALa2	ALc2	ALb1	ALa1	ALc1
	AX1C+AL1C													ALb1	ALa1	ALc1	AXb1	AXa1	AXc1
	PTA+SH	PALa		PALc	C1		C2												
	PTA+UV	PALa		PALc	D1		D2												
9 terminals	AX3C										AXb3	AXa3	AXc3	AXb2	AXa2	AXc2	AXb1	AXa1	AXc1
	AX2C+AL1C										ALb1	ALa1	ALc1	AXb2	AXa2	AXc2	AXb1	AXa1	AXc1
	AX1C+AL2C										ALb2	ALa2	ALc2	ALb1	ALa1	ALc1	AXb1	AXa1	AXc1
12 terminals	AX4C							AXb4	AXa4	AXc4	AXb3	AXa3	AXc3	AXb2	AXa2	AXc2	AXb1	AXa1	AXc1
	AX3C+AL1C							ALb1	ALa1	ALc1	AXb3	AXa3	AXc3	AXb2	AXa2	AXc2	AXb1	AXa1	AXc1
	AX2C+AL2C							ALb2	ALa2	ALc2	AXb1	AXa1	AXc1	AXb2	AXa2	AXc2	AXb1	AXa1	AXc1

Note: The combinations in the table above are reference examples.

11. Plug-in auxiliary circuit terminal block (PMC)

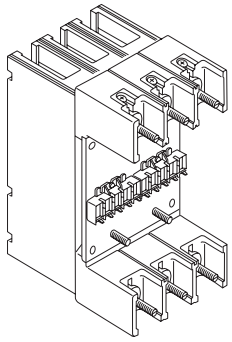

Five auxiliary circuit terminals (self-engaging) constitute a terminal block.
Shown in the table below are standard terminal arrangements as seen from the rear of the plug-in base for standard type.
Contact us for non-standard arrangements.

Breaker	PE30-NF, PE50-NF, PE60-NF, PE125-NF, PS30-NF, PS50-NF, PS60-NF, S50-SF, S125-SF	PE30-NF/NN, PE50-NF/NN, PE60-NF, PE125-NF/NN, PS30-NF, PS50-NF, PS60-NF, S50-SF, S125-SF/SN	H400-NE, L400-NE
	2P ①	3P ②	3P
Number of auxiliary circuit terminals (Max allowable)	[ ][ ][ ]	[ ][ ][ ][ ][ ]	[ ][ ][ ][ ][ ] [ ][ ][ ][ ][ ]
Arrangement 1	[ ][C1][C2]	[AXc1][AXa1][AXb1][C1][C2] [ALc1][ALa1][ALb1][C1][C2]	[AXc1][AXa1][AXb1][AXc2][AXa2] [AXb2][ ][ ][C1][C2] [AXc2][AXa2][AXb2][ALc1][ALa1] [ALb1][ ][ ][C1][C2]
Arrangement 2	[ ][D1][D2]	[AXc1][AXa1][AXb1][D1][D2] [ALc1][ALa1][ALb1][D1][D2]	[AXc1][AXa1][AXb1][AXc2][AXa2] [AXb2][ ][ ][D1][D2] [AXc1][AXa1][AXb1][ALc1][ALa1] [ALb1][ ][ ][D1][D2]
Arrangement 3	[AXc1][AXa1][AXb1] [ALc1][ALa1][ALb1]	[AXc1][AXa1][AXb1][ALc1][ALa1]	[AXc1][AXa1][AXb1][PALc][PALa] [ ][OP1][OP2][C1][C2] ＊1 [AXc1][AXa1][AXb1][PALc][PALa] [ ][OP1][OP2][D1][D2] ＊1

Notes:
①: This is the terminal arrangement of the plug-in base for the distribution board.
②: The terminal arrangement of the plug-in base for the distribution board is the same as that of the plug-in base for the switchboard.
＊1: If the OCR controller is installed separately, substitute OS1 and OS2 for OP1 and OP2 and connect these terminals to the controller terminals having the same numbers.

11. Plug-in auxiliary circuit terminal block (PMC)

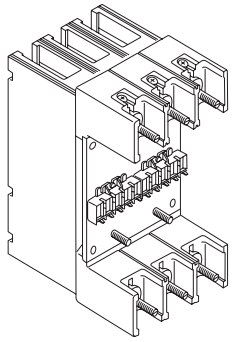

Five auxiliary circuit terminals (self-engaging) constitute a terminal block.
Shown in the table below are standard terminal arrangements as seen from the rear of the plug-in base for standard type.
Contact us for non-standard arrangements.

* The auxiliary circuit terminals cannot be used with the XM30PB plug-in type.
* If the number of auxiliary circuit terminals (self-engaging) is insufficient for S1250-NE/GE/NN, lead wires are to be used along with the auxiliary circuit terminals. Please state the accessories for which lead wires are used, when ordering.

Breaker	S100-GF, S125-GF, H100-NF, L100-NF, H125-NF, L125-NF, H225-NF, L225-NF	S630-CF/NF/NE/GN, S800-CF/NF/NE/RF/RE/PF/PE/NN, S1250-NE/GE/NN, H630-NE, L630-NE, H800-NE, L800-NE	TL-1000NE, TL-1200NE
	3P	3P	3P, 4P
Number of auxiliary circuit terminals (Max allowable)			
Arrangement 1	AXc1 AXa1 AXb1 C1 C2 ALc1 ALa1 ALb1 C1 C2	AXc1 AXa1 AXb1 ALc1 ALa1 ALb1 OP1 OP2 D1 D2 (OP1 OP2: *1) AXc2 AXa2 AXb2 PALc PALa	AXc1 AXa1 AXb1 ALc1 ALa1 ALb1 OP1 OP2 U1 U2 (OP1 OP2: *1) AXc2 AXa2 AXb2 PALc PALa
Arrangement 2	AXc1 AXa1 AXb1 D1 D2 ALc1 ALa1 ALb1 D1 D2	AXc1 AXa1 AXb1 ALc1 ALa1 ALb1 OP1 OP2 C1 C2 (OP1 OP2: *1) AXc2 AXa2 AXb2 PALc PALa	AXc1 AXa1 AXb1 ALc1 ALa1 ALb1 OP1 OP2 P1 P2 (OP1 OP2: *1, P1 P2: *2) AXc2 AXa2 AXb2 PALc PALa
Arrangement 3	AXc1 AXa1 AXb1 ALc1 ALa1		AXc1 AXa1 AXb1 ALc1 ALa1 ALb1 OP1 OP2 S1 S2 (OP1 OP2: *1, S1 S2: *2) AXc2 AXa2 AXb2 PALc PALa

* 1: If the OCR controller is installed separately, substitute OS1 and OS2 for OP1 and OP2 and connect these terminals to the controller terminals having the same numbers.
* 2: If the UVT controller is installed separately, substitute UC1 and UC2 for P1 and P2 and connect these terminals to the UC1 and UC2 terminals of the controller.

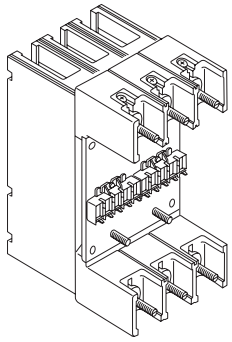

Five auxiliary circuit terminals (self-engaging) constitute a terminal block.
Shown in the table below are standard terminal arrangements as seen from the rear of the plug-in base for standard type.
Contact us for non-standard arrangements.

Breaker	PS50-PF, PS125-NF/PF	PS50-PF, PS125-NF/PF, PS125-NE/PE/NN, PS250-PF/NN, PS250-NE/PE, E250-SF, S250-SF, S250-SN	PS400-CF/NF/NE/GF/GE/NN, PS630-CF/NF/NE/GF/GE/NN, PH400-CF/CE, PH630-CF/CE	
	2P	3P, 4P ③	3P	
Number of auxiliary circuit terminals (Max allowable)				
Arrangement 1	AXc1 AXa1 AXb1	AXc1 AXa1 AXb1 C1 C2	AXc1 AXa1 AXb1 AXc2 AXa2	AXb2 AXc3 AXa3 AXb3
Arrangement 2	ALc1 ALa1 ALb1	AXc1 AXa1 AXb1 D1 D2	AXc1 AXa1 AXb1 ALc1 ALa1	ALb1 ALc2 ALa2 ALb2
Arrangement 3	C1 C2	ALc1 ALa1 ALb1 C1 C2	AXc1 AXa1 AXb1 ALc1 ALa1	ALb1 AXc2 AXa2 AXb2
Arrangement 4	D1 D2	ALc1 ALa1 ALb1 D1 D2	AXc1 AXa1 AXb1 AXc2 AXa2	AXb2 PALc PALa C1 C2
Arrangement 5		AXc1 AXa1 AXb1 ALc1 ALa1	AXc1 AXa1 AXb1 AXc2 AXa2	AXb2 PALc PALa D1 D2
Arrangement 6		PALc PALa	AXc1 AXa1 AXb1 ALc1 ALa1	ALb1 PALc PALa C1 C2
Arrangement 7		AXc1 AXa1 AXb1 PALc PALa	AXc1 AXa1 AXb1 ALc1 ALa1	ALb1 PALc PALa D1 D2
Arrangement 8		ALc1 ALa1 ALb1 PALc PALa	ALc1 ALa1 ALb1 ALc2 ALa2	ALb2 PALc PALa
Arrangement 9		PALc PALa C1 C2	ALc1 ALa1 ALb1	PALc PALa C1 C2
Arrangement 10		PALc PALa D1 D2	ALc1 ALa1 ALb1	PALc PALa D1 D2

Note ③: 4P can only be used with S250-SN.

11. Plug-in auxiliary circuit terminal block (PMB)

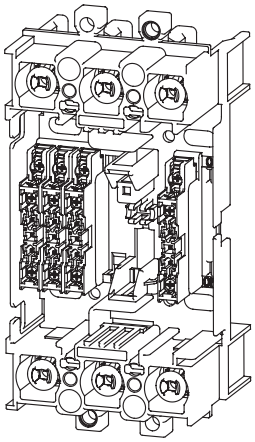

Auxiliary circuit terminals are of self-engaging type.
Shown in the table below are standard terminal arrangements as seen from the front of the plugin base for standard type.
Contact us for non-standard arrangements.

Terminal screw: M3.5
Suitable wire size: 0.5 – 0.75mm^2

Breaker	S100-GF, S125-GF	S100-GF, S125-GF, H100-NF, H125-NF, H225-NF, L100-NF, L125-NF, L225-NF	S630-CF/NF/NE/GN, S800-CF/NF/NE/RF/RE/PF/PE/NN, H400-NE, L400-NE, H630-NE, L630-NE, H800-NE, L800-NE
	2P	3P, 4P	3P, 4P
Number of auxiliary circuit terminals (Max allowable)			
Arrangement 1	C1 C2	AXa1 AXa2 ALa1 C1 AXb1 AXb2 ALb1 AXc1 AXc2 ALc1 C2	AXa1 AXa2 AXa3 ALa1 C1 AXb1 AXb2 AXb3 ALb1 AXc1 AXc2 AXc3 ALc1 C2
Arrangement 2	D1 D2	AXa1 AXa2 ALa1 D1 AXb1 AXb2 ALb1 AXc1 AXc2 ALc1 D2	AXa1 AXa2 AXa3 ALa1 D1 AXb1 AXb2 AXb3 ALb1 AXc1 AXc2 AXc3 ALc1 D2
Arrangement 3	AXa1 AXa2 AXb1 AXb2 AXc1 AXc2		
Arrangement 4	AXa1 ALa1 AXb1 ALb1 AXc1 ALc1		

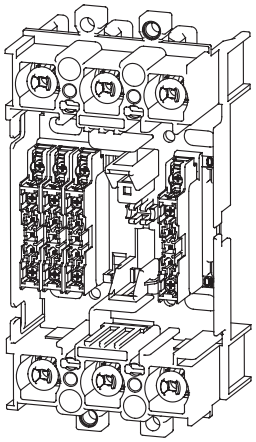

Auxiliary circuit terminals are of self-engaging type.
Shown in the table below are standard terminal arrangements as seen from the front of the plugin base for standard type.
Contact us for non-standard arrangements.

Terminal screw: M3.5
Suitable wire size: 0.5 – 0.75mm^2

Breaker	PS50-PF, PS125-NF/PF, PS125-NE/PE/NN	PS250-PF/NN, PS250-NE/PE	PS400-CF/NF/NE/GF/GE/NN, PS630-CF/NF/NE/GF/GE/NN, PH400-CF/CE, PH630-CF/CE
	3P, 4P	3P, 4P	3P, 4P
Number of auxiliary circuit terminals (Max allowable)			
Arrangement 1	AXa1 AXa2 C1 Axb1 Axb2 AXc1 AXc2 C2	AXa1 AXa2 ALa1 C1 AXb1 AXb2 ALb1 AXc1 AXc2 ALc1 C2	AXa1 AXa2 ALa1 AXa3 C1 Axb1 Axb2 ALb1 Axb3 AXc1 AXc2 ALc1 AXc3 C2
Arrangement 2	AXa1 AXa2 D1 Axb1 Axb2 AXc1 AXc2 D2	AXa1 AXa2 ALa1 D1 AXb1 AXb2 ALb1 AXc1 AXc2 ALc1 D2	AXa1 AXa2 ALa1 AXa3 D1 Axb1 Axb2 ALb1 Axb3 AXc1 AXc2 ALc1 AXc3 D2
Arrangement 3	AXa1 ALa1 C1 Axb1 ALb1 AXc1 ALc1 C2		
Arrangement 4	AXa1 ALa1 D1 Axb1 ALb1 AXc1 ALc1 D2		

Note: Optional cable for the preferential trip alarm (PTA) is lead wire draw-in.

12. DIN rail adapter

The circuit breaker can easily be mounted on a 35 mm wide DIN rail by mounting the DIN rail adapter on the rear of the circuit breaker.

■ Applicable breakers

Frame size (A)	MCCB	ELCB	Number of poles	DIN rail adaptor Order code
30, 50	**PE30-NF/NN, PS30-NF, PE50-NF/NN/NFZ/NFN, PS50-NF/NFZ**	**PZE30-NF, PZS30-NF, PZE50-NF/NFN, PZS50-NF, ZS50-SF**	3P	T2DA16L
	S50-SF		3P, 4P	
	PS50-PF		3P, 4P	TPDA16
60, 100, 125	**PE60-NF, PS60-NF, PE125-NF/NN/NFZ/NFN, ZAS125-SF, NS125-SF**	**PZE60-NF, PZS60-NF, PZE125-NF/NFN, ZS125-SF, ZS100-SM, ZNS125-SF**	3P	T2DA16L
	S125-SF, S125-SN		3P, 4P	
	PS125-NM		3P	TPDA16
	PS125-NF/PF/NN, PS125-NE/PE		3P, 4P	
	S100-GF, S125-GF, ZAS50-GF, ZAS100-GF, ZAS125-GF	**ZS100-GF, ZS125-GF**	3P, 4P	T2DA12

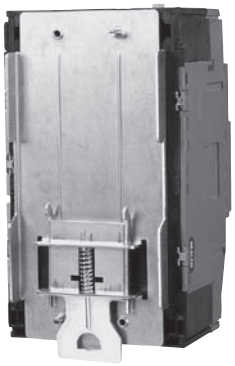
T2DA12

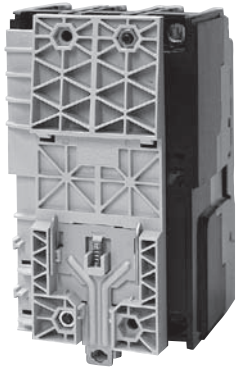
T2DA16L

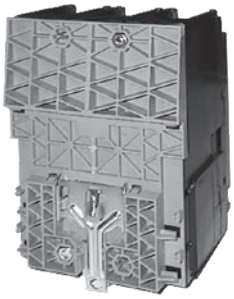
TPDA16

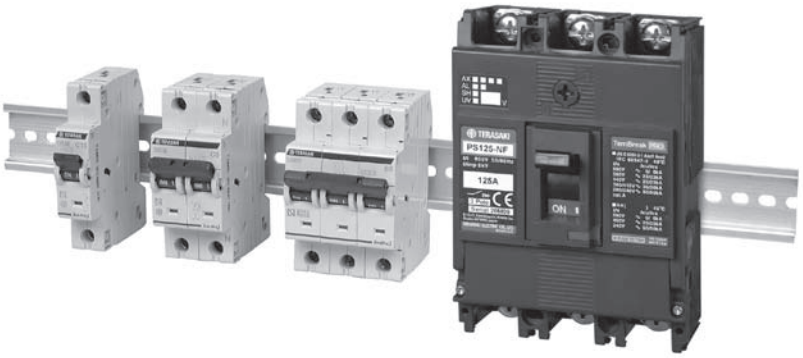

13. Door Flange (DF)

Door flanges are recommended to be used to cover the cutout of a switchboard panel.

Fig. 1

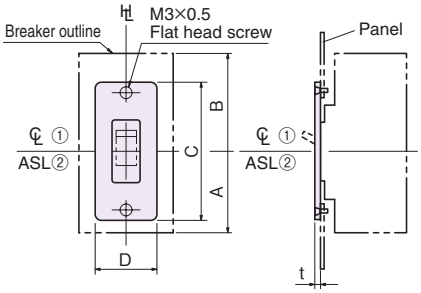

Fig. 2

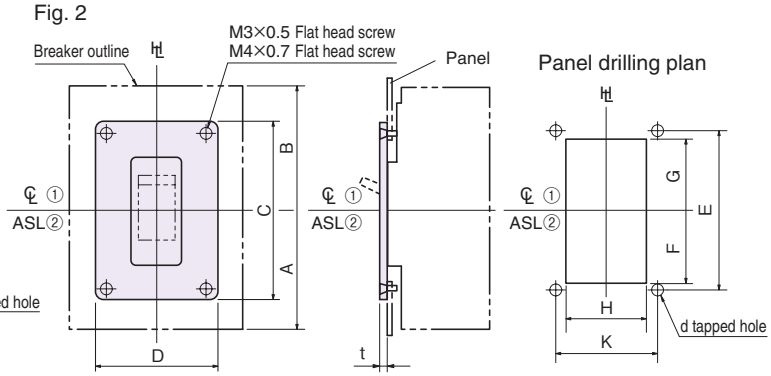

Dimensions, mm

Frame size (A)	Types of breakers		Order codes	Fig.	A	B	C	D	E	F		G		H		K	d	t
	MCCB	ELCB								Min	Max	Min	Max	Min	Max			
30, 50, 60, 100, 125	**PE30-NF/NN, PS30-NF, PE50-NF/NN/NFZ/NFN, PS50-NF/NFZ, PE60-NF, PS60-NF, PE125-NF/NN/NFZ/NFN**	**PZE30-NF, PZS30-NF, PZE50-NF/NFN, PZS50-NF, PZE60-NF, PZS60-NF, PZE125-NF/NFN**	T2DF25	1 ①	65	65	105	50	92	37	42	37	42	32	45	—	M3×0.5	2
	S50-SF, S125-SF/SN, ZAS125-SF, NAE125-SF, NAS125-SF, NS125-SF	**ZS50-SF, ZS125-SF, ZS100-SM, ZNS125-SF**	T2DF25	1 ①	65	65	105	50	92	37	42	37	42	32	45	—	M3×0.5	2
	PS50-PF, PS125-NF/PF/NM/NN, PS125-NE/PE		T2DF25	1 ①	65	65	105	50	92	37	42	37	42	32	45	—	M3×0.5	2
	S100-GF, S125-GF, ZAS50-GF, ZAS100-GF, ZAS125-GF	**ZS100-GF, ZS125-GF**	T2DF25	1 ①	77.5	77.5	105	50	92	37	42	37	42	32	45	—	M3×0.5	2
	H100-NF, H125-NF, L100-NF, L125-NF		T2DF25	1 ①	82.5	82.5	105	50	92	37	42	37	42	32	45	—	M3×0.5	2
225, 250	**ZAS225-GF, ZAS250-GF**	**ZS225-GF, ZS250-GF**	T2DF25	1 ①	82.5	82.5	105	50	92	37	42	37	42	32	45	—	M3×0.5	2
	E250-SF, S250-SF, S250-SM, S250-SN, ZAE250-SF, ZAS250-SF, NAE250-SF, NAS250-SF, NE250-SF, NS250-SF	**ZE250-SF, ZS250-SF/SM, ZNE250-SF, ZNS250-SF**	T2DF25	1 ①	82.5	82.5	105	50	92	37	42	37	42	32	45	—	M3×0.5	2
	PS250-PF/NN, PS250-NE/PE		T2DF25	1 ①	82.5	82.5	105	50	92	37	42	37	42	32	45	—	M3×0.5	2
	H225-NF/NE, H250-NF, L225-NF, L250-NF		T2DF25	1 ①	82.5	82.5	105	50	92	37	42	37	42	32	45	—	M3×0.5	2
400, 600, 630, 800	**E400-NF, ZAE400-NF, ZAS400-NF/GF, NAE400-NF, NAS400-NF, NE400-NF, NS400-NF**	**ZE400-NF, ZS400-NF/GF, ZNE400-NF, ZNS400-NF**	T2DF40	2 ①	130	130	135	95	120	48	56	48	56	57	90	80	M3×0.5	2
	PS400-CF/NF/GF/NN, PS400-NE/GE, PH400-CF, PH400-CE, PS630-CF/NF/GF/NN, PS630-NE/GE, PH630-CF, PH630-CE		T2DF40	2 ①	130	130	135	95	120	48	56	48	56	57	90	80	M3×0.5	2
	H400-NE, L400-NE		T2DF40	2 ①	130	130	135	95	120	48	56	48	56	57	90	80	M3×0.5	2
	S630-CF/NF/NE/GN, S800-CF/NF/RF/PF/NN, ZAS630-CF/NF, ZAS800-CF/NF, NS630-NF, NS800-NF, S800-NE/RE/PE, H630-NE, L630-NE, H800-NE, L800-NE	**ZS630-CF/NF, ZS800-CF/NF**	T2DF40	2 ②	132	141	135	95	120	48	56	48	56	57	90	80	M3×0.5	2
1000, 1200	**S1000-CE/NN**		T2DF40	2 ②	132	141	135	95	120	48	56	48	56	57	90	80	M3×0.5	2
	TL-1000NE, TL-1200NE		TAA-5	2 ②	170	200	150	120	135	51	63.5	51	63.5	85	115	80	M3×0.5	5
1250, 1600	**S1250-NE/GE/NN, S1600-NE/NN**		T2DFX6	2 ②	170	200	150	120	135	51	63.5	51	63.5	85	115	80	M3×0.5	2
2000, 2500, 3200	**XS2000NE/NN, XS2500NE/NN, XS3200NE/NN**		TAA-10	2 ②	193	257	200	175	175	74	83.5	74	83.5	123	170	150	M4×0.7	5

Notes:
①: ℄ Handle centre line is applied.
②: ASL Arrangement standard line is applied.

7 Characteristics and Outline Dimensions

Moulded Case Circuit Breakers

- PE30-NF, PE50-NF, PS30-NF, PS50-NF ····· 7-4
- S50-SF ····· 7-6
- PE60-NF, PS60-NF, PE125-NF ····· 7-8
- S125-SF ····· 7-10
- PS125-NF ····· 7-12
- PS50-PF, PS125-PF ····· 7-14
- PS125-NE ····· 7-16
- PS125-PE ····· 7-18
- S100-GF ····· 7-20
- S125-GF ····· 7-22
- H100-NF, L100-NF ····· 7-24
- H125-NF, L125-NF ····· 7-26
- E250-SF ····· 7-28
- S250-SF ····· 7-30
- PS250-PF ····· 7-32
- PS250-NE, PS250-PE ····· 7-34
- H225-NF, L225-NF ····· 7-36
- H250-NF, L250-NF ····· 7-38
- H225-NE ····· 7-40
- E400-NF ····· 7-42
- PS400-CF, PS400-NF, PS400-GF ····· 7-44
- PS400-NE, PS400-GE ····· 7-46
- PH400-CF ····· 7-48
- PH400-CE ····· 7-50
- H400-NE, L400-NE ····· 7-52
- S630-CF, S630-NF ····· 7-54
- S630-NE ····· 7-56
- PS630-CF, PS630-NF, PS630-GF ····· 7-58
- PS630-NE, PS630-GE ····· 7-60
- PH630-CF ····· 7-62
- PH630-CE ····· 7-64
- H630-NE, L630-NE ····· 7-66
- S800-CF, S800-NF, S800-RF, S800-PF ····· 7-68
- S800-NE, S800-RE, S800-PE ····· 7-70
- H800-NE, L800-NE ····· 7-72
- S1000-CE ····· 7-74
- S1250-NE, S1250-GE ····· 7-76
- TL-1000NE, TL-1200NE ····· 7-78
- S1600-NE ····· 7-80
- XS2000NE ····· 7-82
- XS2500NE ····· 7-84
- XS3200NE ····· 7-86

Moulded Case Circuit Breakers for motor protection

- E30-NM, E50-NM, S30-NM, S50-NM ····· 7-88
- E100-NM ····· 7-90
- S250-SM ····· 7-92

Switch-disconnectors

- PE30-NN, PE50-NN ····· 7-94
- PE125-NN ····· 7-96
- S125-SN ····· 7-98
- PS125-NN ····· 7-100
- S250-SN ····· 7-102
- PS250-NN ····· 7-104
- PS400-NN ····· 7-106
- PS630-NN ····· 7-108
- S630-GN, S800-NN, S1000-NN ····· 7-110
- S1250-NN ····· 7-112
- S1600-NN ····· 7-114

Non-automatic trip breakers

- XS2000NN ····· 7-116
- XS2500NN, XS3200NN ····· 7-118

Circuit Breaker with earth leakage alarm

- PE50-NFZ, PS50-NFZ, PE125-NFZ ····· 7-120
- ZAS125-SF ····· 7-122
- ZAS50-GF, ZAS100-GF ··· 7-124
- ZAS125-GF ····· 7-126
- ZAE250-SF, ZAS250-SF ··· 7-128
- ZAS225-GF ····· 7-130
- ZAS250-GF ····· 7-132
- ZAE400-NF, ZAS400-NF, ZAS400-GF ····· 7-134
- ZAS630-CF, ZAS630-NF ··· 7-136
- ZAS800-CF, ZAS800-NF ··· 7-138

Circuit Breaker with earth leakage alarm for distribution boards and control boards

- TB50KSL ····· 7-140
- TB50KSZ, TB100KSZ ··· 7-142

Single phase 3-wire circuit breakers with neutral phase open protection and earth leakage alarm

- NAE125-SF, NAS125-SF ····· 7-144
- NAE250-SF, NAS250-SF ····· 7-146
- NAE400-NF, NAS400-NF ····· 7-148

Single phase 3-wire circuit breakers with neutral phase open protection

- PE50-NFN, PE125-NFN ··· 7-150
- NS125-SF ····· 7-152
- NE250-SF, NS250-SF ··· 7-154
- NE400-NF, NS400-NF ··· 7-156
- NS630-NF ····· 7-158
- NS800-NF ····· 7-160

Circuit Breaker for distribution boards

- TB-5S ····· 7-162
- TB-5P ····· 7-164
- TB-5D ····· 7-166
- TB-51C, TB-52C ····· 7-168
- Plug-in base for Distribution boards / Branching bars ··· 7-170

Earth Leakage Circuit Breakers

- PZE30-NF, PZE50-NF, PZS30-NF, PZS50-NF ··· 7-174
- ZS50-SF ····· 7-176
- PZE60-NF, PZS60-NF, PZE125-NF ····· 7-178
- ZS125-SF ····· 7-180
- ZS100-GF ····· 7-182
- ZS125-GF ····· 7-184
- ZE250-SF, ZS250-SF ····· 7-186
- ZS225-GF ····· 7-188
- ZS250-GF ····· 7-190
- ZE400-NF, ZS400-NF, ZS400-GF ····· 7-192
- ZS630-CF, ZS630-NF ··· 7-194
- ZS800-CF, ZS800-NF ··· 7-196

Earth Leakage Circuit Breakers for motor protection

- ZE30-NM, ZE50-NM, ZS30-NM, ZS50-CM ····· 7-198
- ZE100-NM ····· 7-200
- ZS100-SM ····· 7-202
- ZS250-SM ····· 7-204

Single phase 3-wire earth leakage circuit breakers with neutral phase open protection

- PZE50-NFN, PZE125-NFN ····· 7-206
- ZNS125-SF ····· 7-208
- ZNE250-SF, ZNS250-SF ··· 7-210
- ZNE400-NF, ZNS400-NF ··· 7-212

Earth Leakage Circuit Breaker for distribution boards and control boards

- TZ30EC, TZ50EE ····· 7-214
- TZ100EC ····· 7-216
- TZ-51C, TZ-52C ····· 7-218

Special Breakers

- High-Performance Electronic Smart Circuit Breaker (TPOU type OCR) ····· 7-220
- High-Performance Electronic Circuit Breaker (XOW type OCR) ····· 7-222
- 690V AC Circuit Breaker ··· 7-224
- Special Mounting Dimensions 400A Frame Circuit Breaker 7-230
- Heat Resistant Circuit Breaker for Emergency Power Supplies ····· 7-242

Earth Leakage Relays

- TZS series ····· 7-243

Circuit Breaker with motor operators

- S100-GF, S125-GF, ZAS50-GF, ZAS100-GF, ZAS125-GF, ZS100-GF, ZS125-GF ····· 7-244
- PS50-PF, PS125-NF/PF/NE/PE /NM/NN ····· 7-245
- ZAS225-GF, ZAS250-GF, ZS225-GF, ZS250-GF ··· 7-246
- E250-SF, S250-SF, S250-SM/SN, ZAE250-SF, ZAS250-SF, NAE250-SF, NAS250-SF, NE250-SF, NS250-SF, ZE250-SF, ZS250-SF/SM, ZNE250-SF, ZNS250-SF ····· 7-247
- PS250-PF/NE/PE/NN ····· 7-248
- H100-NF, L100-NF, H125-NF, L125-NF, H225-NF/NE, L225-NF, H250-NF, L250-NF ····· 7-249
- E400-NF, ZAE400-NF, ZAS400-NF/GF, NAE400-NF, NAS400-NF, NE400-NF, NS400-NF, ZE400-NF, ZS400-NF/GF, ZNE400-NF, ZNS400-NF ····· 7-250
- PS400-CF/NF/GF/NE/GE/NN, PH400-CF/CE ····· 7-251
- PS630-CF/NF/GF/NE/GE/NN, PH630-CF/CE ····· 7-252
- H400-NE, L400-NE ····· 7-253
- S630-CF/NF/NE/GN, ZAS630-CF/NF, NS630-NF, ZS630-CF/NF, S800-CF/NF/NE/RF/RE/PF/PE/NN, ZAS800-CF/NF, NS800-NF, ZS800-CF/NF ····· 7-254
- S1000-CE/NN ····· 7-255
- H630-NE, L630-NE ····· 7-256
- H800-NE, L800-NE ····· 7-257
- S1250-NE/GE/NN ····· 7-258
- TL-1000NE, TL-1200NE ··· 7-259
- S1600-NE/NN ····· 7-260

7 Characteristics and Outline Dimensions TemBreak PRO

Moulded Case Circuit Breakers

PE30-NF, PE50-NF, PS30-NF, PS50-NF

Ratings and Specifications

Frame size (A)			30		50		30		50	
Type			PE30-NF		PE50-NF		PS30-NF		PS50-NF	
Number of poles			2	3	2	3	2	3	2	3
■ Ratings										
Rated current, A			3	15	15	40	3	15	15	40
Calibrated at 40°C			5	20	20	50	5	20	20	50
45°C			10	30	30		10	30	30	
Rated insulation voltage〔U_i〕 V			690		690		690		690	
Rated impulse withstand voltage〔U_{imp}〕 kV			8		8		8		8	
Rated short time withstand current 〔I_{cw}〕 kA			—		—		—		—	
Utilization Category			A		A		A		A	
■ Rated breaking capacity, kA										
JIS C 8201-2-1 Ann.1 Ann.2	AC	690V	—		—		—		—	
IEC 60947-2		500V	—		2.5/2.5		2.5/2.5		7.5/7.5	
I_{cu}/I_{cs}(sym)		440V	1.5/1.5		2.5/2.5		2.5/2.5		7.5/7.5	
		415V	1.5/1.5		2.5/2.5		2.5/2.5		7.5/7.5	
		380V	1.5/1.5		5/5		5/5		7.5/7.5	
		240V	2.5/2.5		7.5/7.5		7.5/7.5		15/15	
	① DC	250V	—		2.5/2.5 ⑰ ㉗		2.5/2.5 ⑰ ⑲ ㉗		7.5/7.5 ⑰ ㉗	
		125V	—		2.5/2.5 ⑰ ㉗		2.5/2.5 ⑰ ⑲ ㉗		7.5/7.5 ⑰ ㉗	
NK	AC	690V	—		—		—		—	
I_{cu}/I_{cs}(sym)		450V	1.5/1.5		2.5/2.5		2.5/2.5		7.5/7.5	
		240V	2.5/2.5		7.5/7.5		7.5/7.5		15/15	
	① DC	250V	—		2.5/2.5 ⑰ ㉗		2.5/2.5 ⑰ ⑲ ㉗		7.5/7.5 ⑰ ㉗	
Weight (◉ marked standard type) kg			0.5	0.7	0.5	0.7	0.5	0.7	0.5	0.7
■ Connections and Mountings										
Front-connected (FC)	Terminal screws		◉ ㊺		◉ ㊺		◉ ㊺		◉ ㊺	
	With extension bars		○ ㊸		○ ㊸		○ ㊸		○ ㊸	
Rear-connected (RC)	Flat bar studs		○		○		○		○	
Plug-in (PM) For switchboards	High-performance (PMB)		—		—		—		—	
	Standard (PMC)		—	○	—	○	—	○	—	○
For distribution boards (PMD) ㊺			○		○		○		○	
Flush-mounted (FP)	With flat bar studs		○		○		○		○	
Draw-out type (DR)			—		—		—		—	
TemPlug70 (PG)			—		—		—		—	
DIN rail mount			—	○ ⑪	—	○ ⑪	—	○ ⑪	—	○ ⑪
■ Accessories (optional)		Symbol								
Externally mounted: Motor operator		M C	—		—		—		—	
External operating handle	Breaker-mounted	H B	—	●	—	●	—	●	—	●
	Door-mounted (variable depth)	H P	—	●	—	●	—	●	—	●
Toggle extension		H A	—		—		—		—	
Mechanical interlock	Slide type	M S	—	●	—	●	—	●	—	●
	Rear-connected type	M B	—		—		—		—	
	Link type	M L	—		—		—		—	
	Wire type	M W	—		—		—		—	
Toggle holder		H H	●		●		●		●	
Toggle lock		H L	●		●		●		●	
Terminal cover	For front-connected	C F	●		●		●		●	
	For rear-connected and plug-in	C R	●		●		●		●	
Terminal block for lead		T F	●		●		●		●	
Door flange		D F	●		●		●		●	
CE marking			Yes		Yes		Yes		Yes	
Overcurrent trip mechanism			Thermal-magnetic ⑦		Thermal-magnetic		Thermal-magnetic ⑦		Thermal-magnetic	
Colour of cover			Grey Blue		Grey Blue		Grey Blue		Grey Blue	
Trip button (Colour)			Yes (Red)		Yes (Red)		Yes (Red)		Yes (Red)	
Suitability for isolation			Yes		Yes		Yes		Yes	
Reverse connection			Yes ㉒		Yes		Yes ㉒		Yes	

Notes:

◉ : Standard. This configuration used unless otherwise specified. ○ : Optional standard. Specify when ordering.
▲ : Semi-standard. ● : "yes" or "available". — : "no" or "not available".
① : DC is a special specification. When ordering, please specify DC. ⑦ : Hydraulic-magnetic type for below 10A rating.
⑪ : Please order the DIN rail adapter separately. See page 6-152.
⑰ : See page 4-7 for the instantaneous trip value when using with DC. ⑲ : Only applicable for 15A and above.
㉗ : Applicable to only 2 poles breakers. ㊺ : A wire clamping terminal is provided.
㊸ : For the extension bars, please place the order separately in parts.
㉒ : There are some limitations. See page 5-23 for details. ㊺ : See page 7-172 for the outline dimensions.

Time/Current characteristic curves

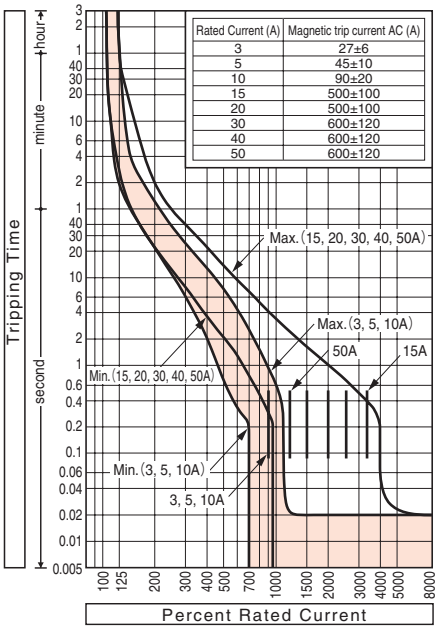

Ambient compensating curves

(3—10A)

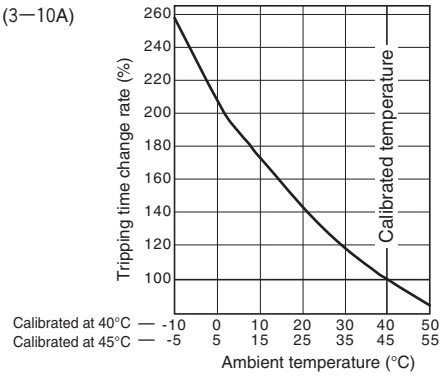

(15—50A)

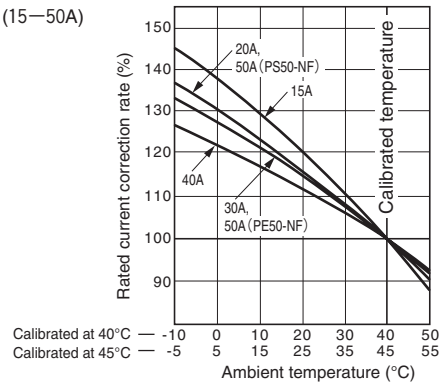

Combinations of Internally Mounted Accessories (Optional)

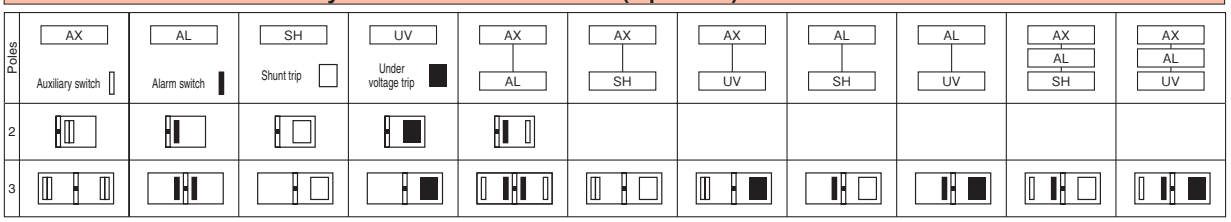

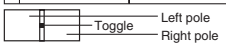

Note: For auxiliary switches or alarm switches, left-hand mounting has priority.

Outline dimensions (mm)

PE30-NF, PE50-NF, PS30-NF, PS50-NF

Front-connected

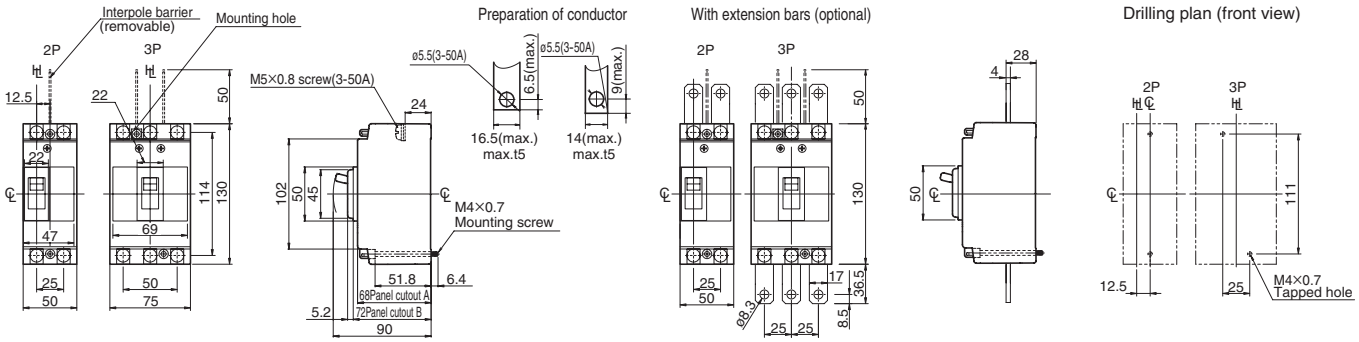

Rear-connected

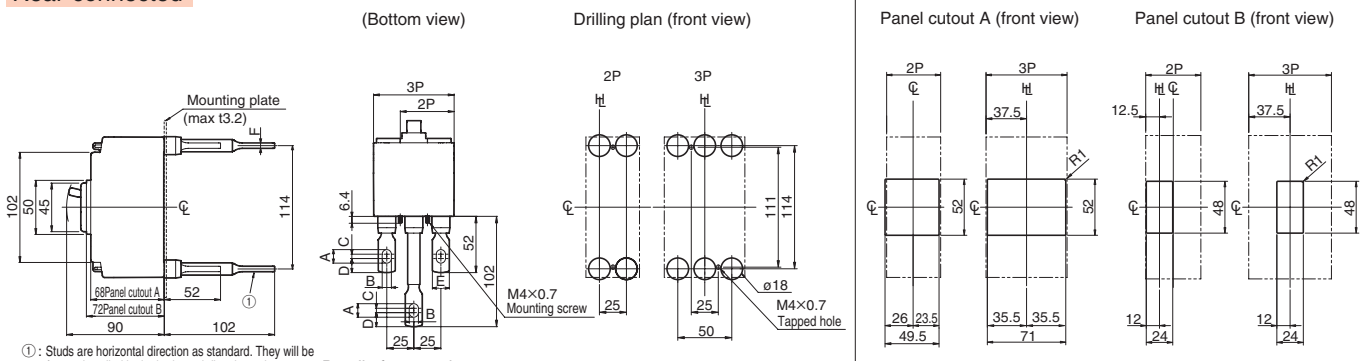

① : Studs are horizontal direction as standard. They will be factory installed in the horizontal direction unless otherwise specified. Vertical position is a special specification. Please specify this when ordering.

Note) If you will arrange the studs vertically, please insulate them carefully with insulating tubes, insulating tape, or similar because the insulation distance between the studs is insufficient.

rated current (A)	A	B	C	D	E	F
3-50	10.5	6.5	4	13	16	4

Panel cutout dimensions shown give an allowance of 1.0mm around the handle escutcheon.

Plug-in (Standard)

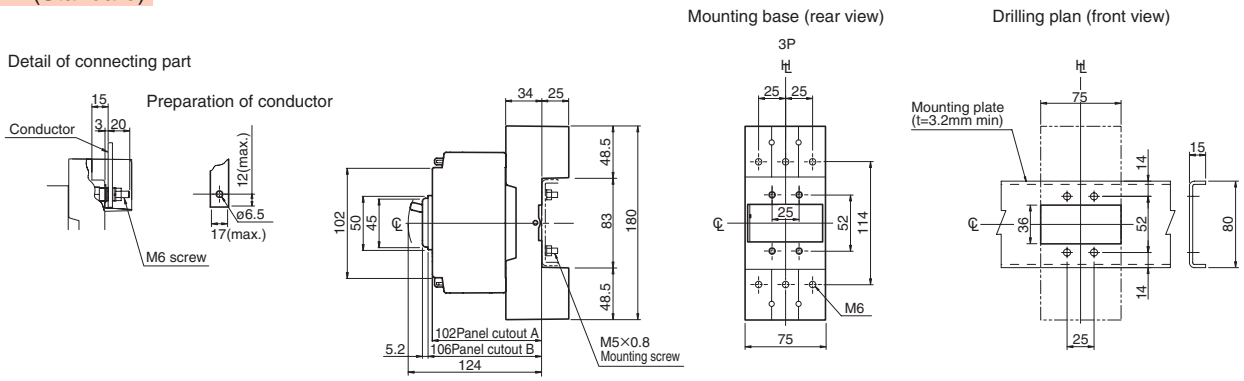

Flush-mounted

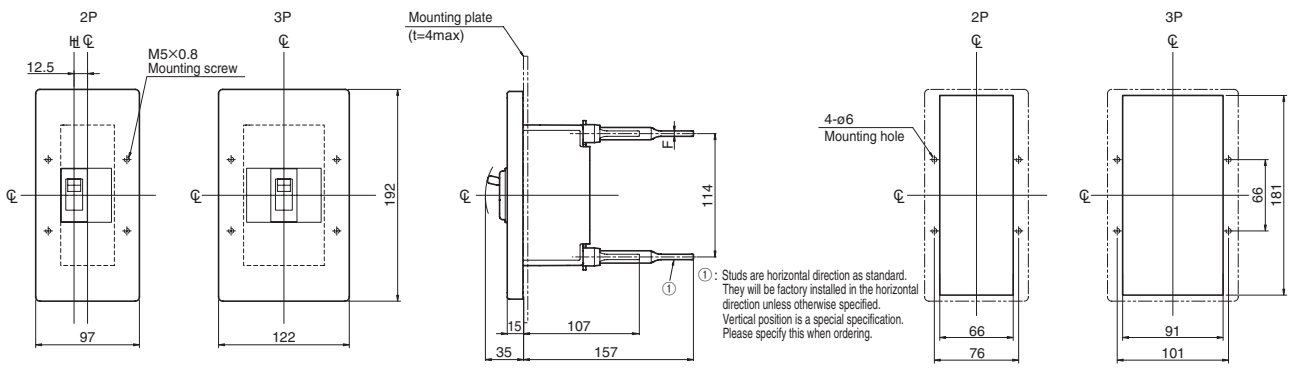

① : Studs are horizontal direction as standard. They will be factory installed in the horizontal direction unless otherwise specified. Vertical position is a special specification. Please specify this when ordering.

rated current (A)	A	B	C	D	E	F
3-50	10.5	6.5	4	13	16	4

Please check the rear side for a detailed outline drawing of the terminals.

Note) If you will arrange the studs vertically, please insulate them carefully with insulating tubes, insulating tape, or similar because the insulation distance between the studs is insufficient.

7 Characteristics and Outline Dimensions TemBreak PRO

Moulded Case Circuit Breakers

S50-SF

Ratings and Specifications

Frame size (A)			50				
Type			**S50-SF**				
Number of poles			2	3	4		
■ Ratings							
Rated current, A			15	40			
Calibrated at 40°C			20	50			
45°C			30				
Rated insulation voltage〔U_i〕 V			690				
Rated impulse withstand voltage〔U_{imp}〕 kV			8				
Rated short time withstand current 〔I_{cw}〕 kA			—				
Utilization Category			A				
■ Rated breaking capacity, kA							
JIS C 8201-2-1 Ann.1 Ann.2	AC	690V	6/3				
IEC 60947-2		500V	12/6				
I_{cu}/I_{cs}(sym)		440V	25/13				
		415V	30/15				
		380V	30/15				
		240V	50/25				
	① DC	250V	25/13 ⑰ ㉗				
		125V	40/20 ⑰ ㉗				
NK	AC	690V	—				
I_{cu}/I_{cs}(sym)		450V	25/13				
		240V	50/25				
	① DC	250V	25/13 ⑰ ㉗				
Weight (◉ marked standard type) kg			0.6	0.8	1.0		
■ Connections and Mountings							
Front-connected (FC)	Terminal screws		◉ ㊺				
	With extension bars		○ ㊸				
Rear-connected (RC)	Flat bar studs		○				
Plug-in (PM) For switchboards	High-performance (PMB)		—				
	Standard (PMC)		—	○	—		
For distribution boards (PMD) ㊺			○		—		
Flush-mounted (FP)	With flat bar studs		○		—		
Draw-out type (DR)			—				
TemPlug70 (PG)			○		—		
DIN rail mount			—	○ ⑪			
■ Accessories (optional)		Symbol					
Externally mounted: Motor operator		M C	—				
External operating handle	Breaker-mounted	H B	—	●			
	Door-mounted (variable depth)	H P	—	●			
Toggle extension		H A	—				
Mechanical interlock	Slide type	M S	—	●			
	Rear-connected type	M B	—				
	Link type	M L	—				
	Wire type	MW	—				
Toggle holder		H H	●				
Toggle lock		H L	●				
Terminal cover	For front-connected	C F	●				
	For rear-connected and plug-in	C R	●				
Terminal block for lead		T F	●				
Door flange		D F	●				
CE marking			Yes				
Overcurrent trip mechanism			Thermal-magnetic				
Colour of cover			Grey Blue				
Trip button (Colour)			Yes (Red)				
Suitability for isolation			Yes				
Reverse connection			Yes				

Notes:

◉ : Standard. This configuration used unless otherwise specified.
○ : Optional standard. Specify when ordering. ● : "yes" or "available". — : "no" or "not available".
① : DC is a special specification. When ordering, please specify DC.
⑪ : Please order the DIN rail adapter separately. See page 6-152.
⑰ : See page 4-7 for the instantaneous trip value when using with DC. ㉗ : Applicable to only 2 poles breakers.
㊺ : A wire clamping terminal is provided. ㊸ : For the extension bars, please place the order separately in parts.
㊺ : See page 7-172 for the outline dimensions.

Time/Current characteristic curves

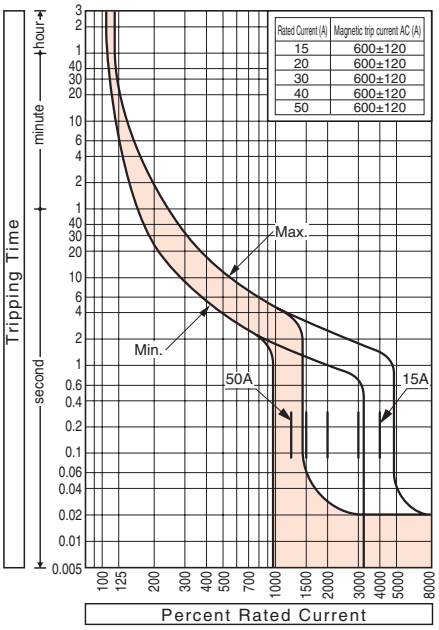

Ambient compensating curves

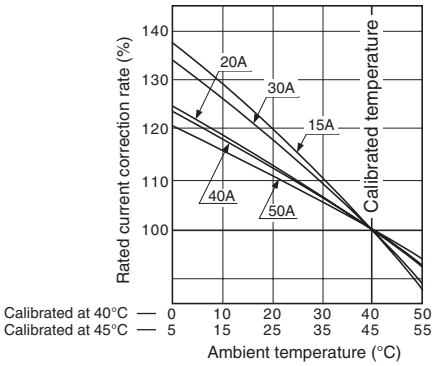

Combinations of Internally Mounted Accessories (Optional)

Poles	AX (Auxiliary switch)	AL (Alarm switch)	SH (Shunt trip)	UV (Under voltage trip)	AX–AL	AX–SH	AX–UV	AL–SH	AL–UV	AX–AL–SH	AX–AL–UV
2											
3·4											

Toggle — Left pole / Right pole

Note: For auxiliary switches or alarm switches, left-hand mounting has priority.

Outline dimensions (mm) S50-SF

Front-connected

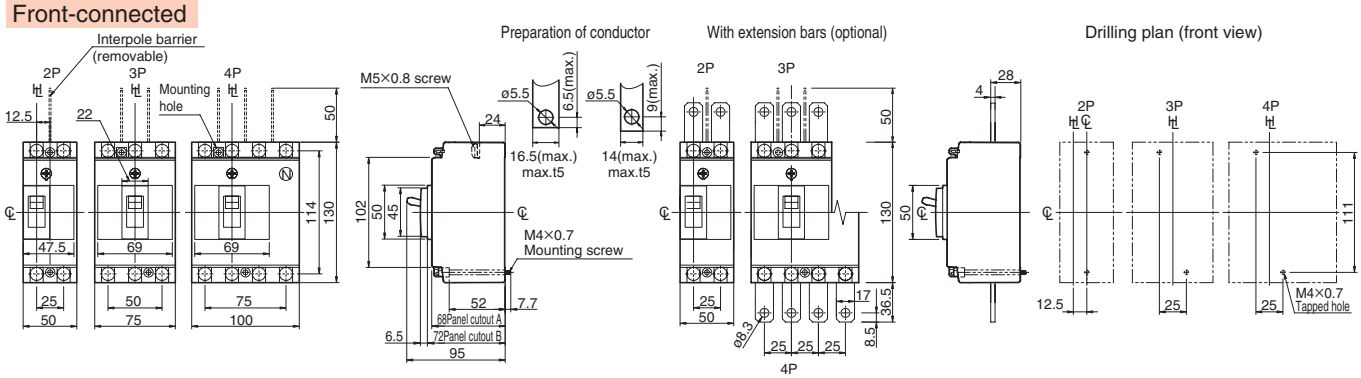

Rear-connected

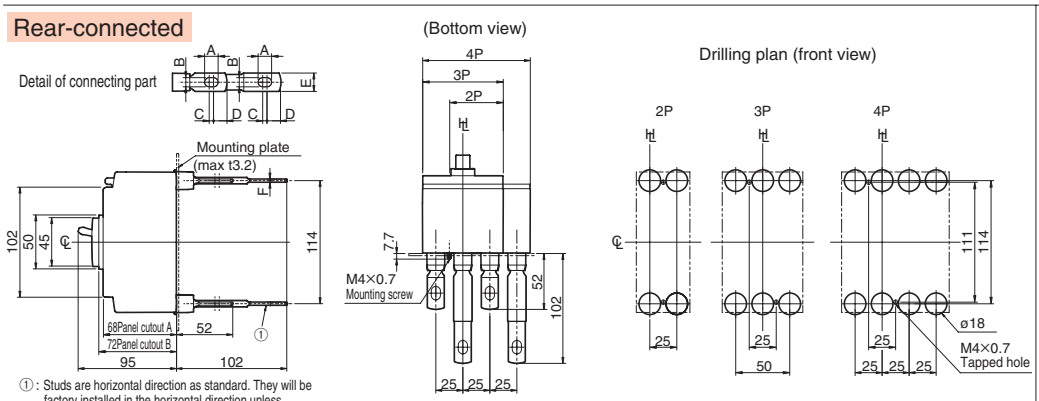

① : Studs are horizontal direction as standard. They will be factory installed in the horizontal direction unless otherwise specified. Vertical position is a special specification. Please specify this when ordering.

Note) If you will arrange the studs vertically, please insulate them carefully with insulating tubes, insulating tape, or similar because the insulation distance between the studs is insufficient.

rated current (A)	A	B	C	D	E	F
15-50	10.5	6.5	4	13	16	4

Panel cutout A (front view)

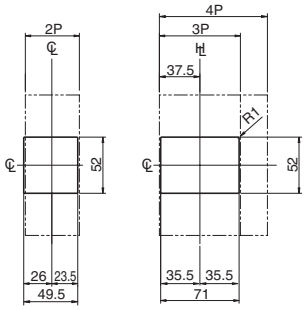

Panel cutout dimensions shown give an allowance of 1.0mm around the handle escutcheon.

Plug-in (Standard)

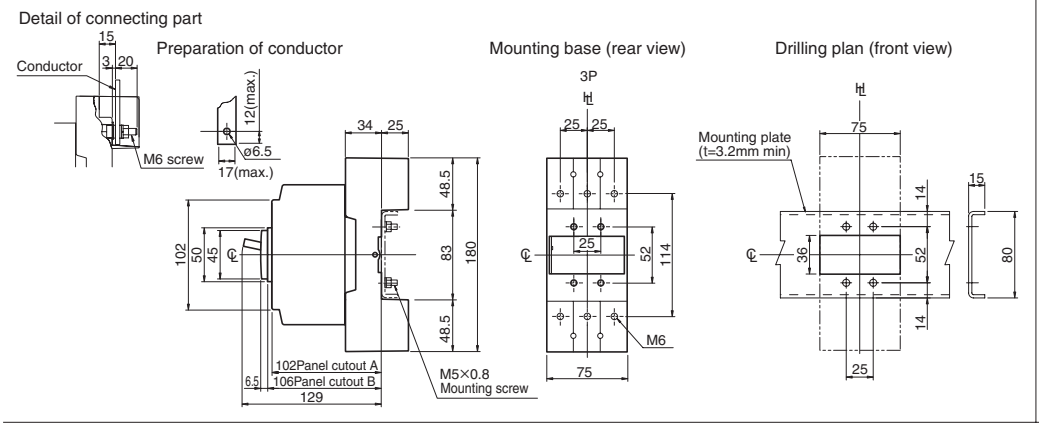

Panel cutout B (front view)

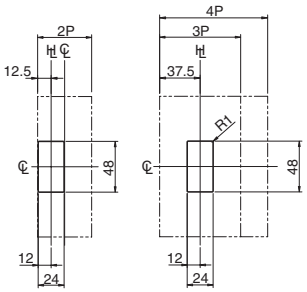

Panel cutout dimensions shown give an allowance of 1.0mm around the handle escutcheon.

Flush-mounted

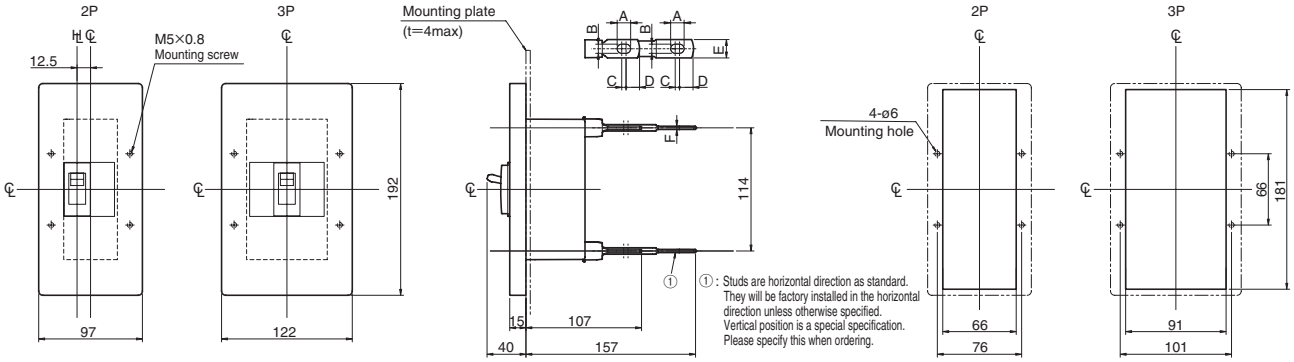

① : Studs are horizontal direction as standard. They will be factory installed in the horizontal direction unless otherwise specified. Vertical position is a special specification. Please specify this when ordering.

rated current (A)	A	B	C	D	E	F
15-50	10.5	6.5	4	13	16	4

Note) If you will arrange the studs vertically, please insulate them carefully with insulating tubes, insulating tape, or similar because the insulation distance between the studs is insufficient.

7 Characteristics and Outline Dimensions TemBreak PRO

Moulded Case Circuit Breakers

PE60-NF, PS60-NF, PE125-NF

Ratings and Specifications

Frame size (A)			60		60		100		125	
Type			PE60-NF		PS60-NF		PE125-NF			
Number of poles			2	3	2	3	2	3	2	3
■ Ratings										
Rated current, A			60		60		60		125	
Calibrated at 40°C							75			
45°C							100			
Rated insulation voltage〔U_i〕 V			690		690		690		690	
Rated impulse withstand voltage〔U_{imp}〕 kV			8		8		8		8	
Rated short time withstand current 〔I_{cw}〕 kA			—		—		—		—	
Utilization Category			A		A		A		A	
■ Rated breaking capacity, kA										
JIS C 8201-2-1 Ann.1 Ann.2	AC	690V	—		—		—		—	
IEC 60947-2		500V	2.5/2.5		7.5/4		7.5/4		7.5/4	
I_{cu}/I_{cs}(sym)		440V	2.5/2.5		10/5		10/5		10/5	
		415V	2.5/2.5		10/5		10/5		10/5	
		380V	5/5		10/5		10/5		10/5	
		240V	7.5/7.5		30/15		30/15		30/15	
	① DC	250V	2.5/2.5 ⑰ ㉗		7.5/4 ⑰ ㉗		7.5/4 ⑰ ㉗		7.5/4 ⑰ ㉗	
		125V	2.5/2.5 ⑰ ㉗		7.5/4 ⑰ ㉗		7.5/4 ⑰ ㉗		7.5/4 ⑰ ㉗	
NK	AC	690V	—		—		—		—	
I_{cu}/I_{cs}(sym)		450V	2.5/2.5		10/5		10/5		10/5	
		240V	7.5/7.5		30/15		30/15		30/15	
	① DC	250V	2.5/2.5 ⑰ ㉗		7.5/4 ⑰ ㉗		7.5/4 ⑰ ㉗		7.5/4 ⑰ ㉗	
Weight (◉ marked standard type) kg			0.6	0.8	0.6	0.8	0.6	0.8	0.6	0.8
■ Connections and Mountings										
Front-connected (FC)	Terminal screws		◉		◉		◉		◉	
	With extension bars		○ ㊸		○ ㊸		○ ㊸		○ ㊸	
Rear-connected (RC)	Flat bar studs		○		○		○		○	
Plug-in (PM) For switchboards	High-performance (PMB)		—		—		—		—	
	Standard (PMC)		—	○	—	○	—	○	—	○
For distribution boards (PMD) ㊺			○		○		○		○	
Flush-mounted (FP)	With flat bar studs		○		○		○		○	
Draw-out type (DR)			—		—		—		—	
TemPlug70 (PG)			—		—		—		—	
DIN rail mount			—	○ ⑪	—	○ ⑪	—	○ ⑪	—	○ ⑪
■ Accessories (optional)		Symbol								
Externally mounted: Motor operator		M C	—		—		—		—	
External operating handle	Breaker-mounted	H B	—	●	—	●	—	●	—	●
	Door-mounted (variable depth)	H P	—	●	—	●	—	●	—	●
Toggle extension		H A	—		—		—		—	
Mechanical interlock	Slide type	M S	—	●	—	●	—	●	—	●
	Rear-connected type	M B	—		—		—		—	
	Link type	M L	—		—		—		—	
	Wire type	MW	—		—		—		—	
Toggle holder		H H	●		●		●		●	
Toggle lock		H L	●		●		●		●	
Terminal cover	For front-connected	C F	●		●		●		●	
	For rear-connected and plug-in	C R	●		●		●		●	
Terminal block for lead		T F	●		●		●		●	
Door flange		D F	●		●		●		●	
CE marking			Yes		Yes		Yes		Yes	
Overcurrent trip mechanism			Thermal-magnetic		Thermal-magnetic		Thermal-magnetic		Thermal-magnetic	
Colour of cover			Grey Blue		Grey Blue		Grey Blue		Grey Blue	
Trip button (Colour)			Yes (Red)		Yes (Red)		Yes (Red)		Yes (Red)	
Suitability for isolation			Yes		Yes		Yes		Yes	
Reverse connection			Yes		Yes		Yes		Yes	

Notes:

◉ : Standard. This configuration used unless otherwise specified. ○ : Optional standard. Specify when ordering.
▲ : Semi-standard. ● : "yes" or "available". — : "no" or "not available".
① : DC is a special specification. When ordering, please specify DC.
⑪ : Please order the DIN rail adapter separately. See page 6-152.
⑰ : See page 4-7 for the instantaneous trip value when using with DC. ㉗ : Applicable to only 2 poles breakers.
㊸ : For the extension bars, please place the order separately in parts.
㊺ : See page 7-172 for the outline dimensions.

Time/Current characteristic curves

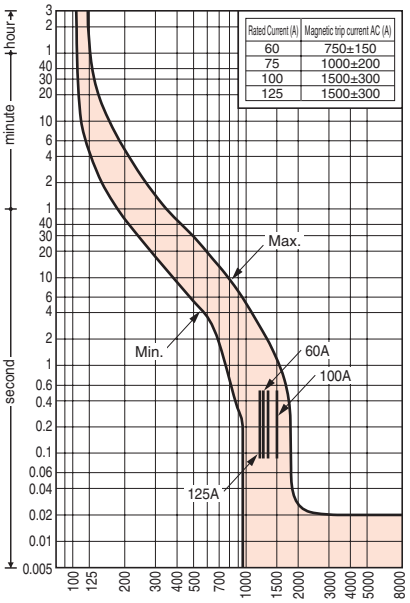

Ambient compensating curves

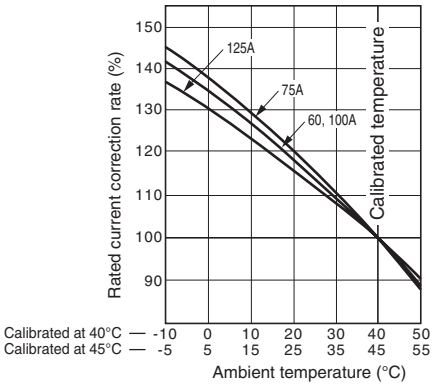

Combinations of Internally Mounted Accessories (Optional)

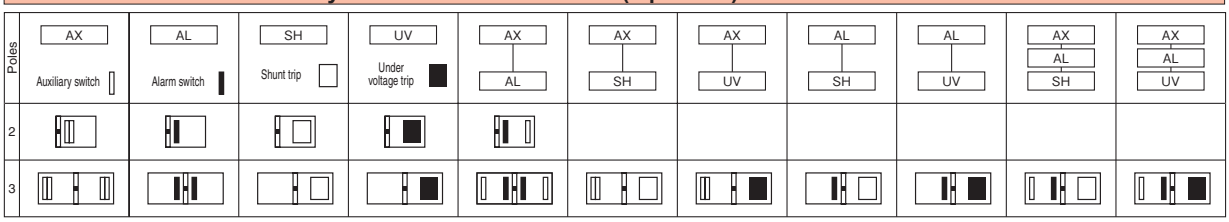

Note: For auxiliary switches or alarm switches, left-hand mounting has priority.

Outline dimensions (mm)

PE60-NF, PS60-NF, PE125-NF

Front-connected

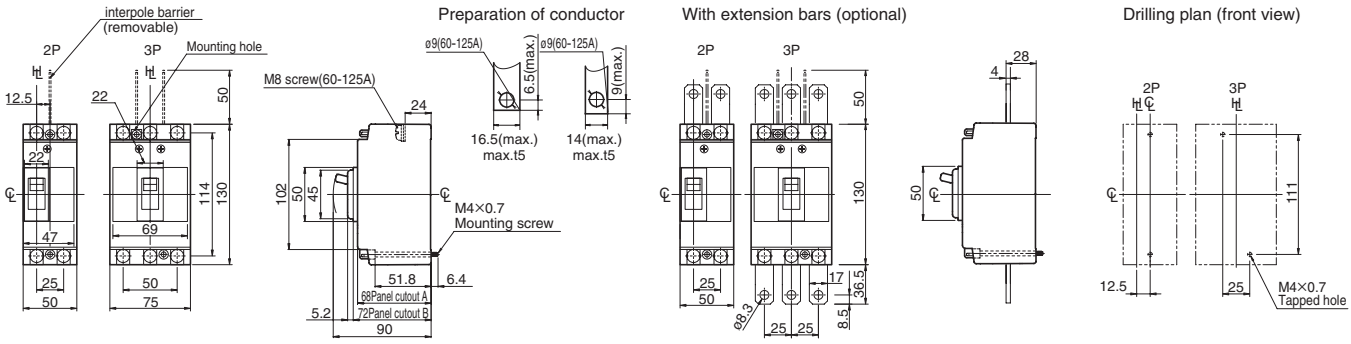

Rear-connected

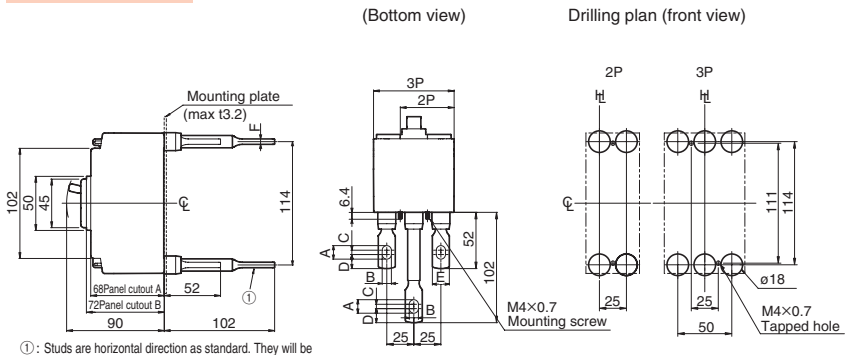

① : Studs are horizontal direction as standard. They will be factory installed in the horizontal direction unless otherwise specified. Vertical position is a special specification. Please specify this when ordering.

Note) If you will arrange the studs vertically, please insulate them carefully with insulating tubes, insulating tape, or similar because the insulation distance between the studs is insufficient.

Detail of connecting part

rated current (A)	A	B	C	D	E	F
60-125	12.5	8.5	4	13	16	5

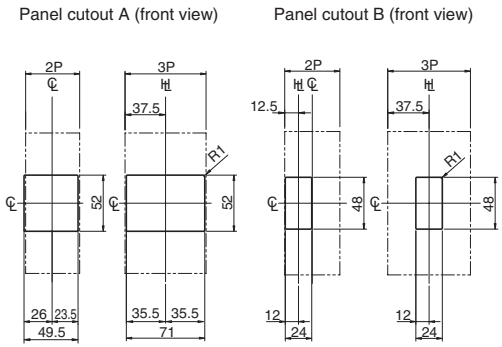

Panel cutout dimensions shown give an allowance of 1.0mm around the handle escutcheon.

Plug-in (Standard)

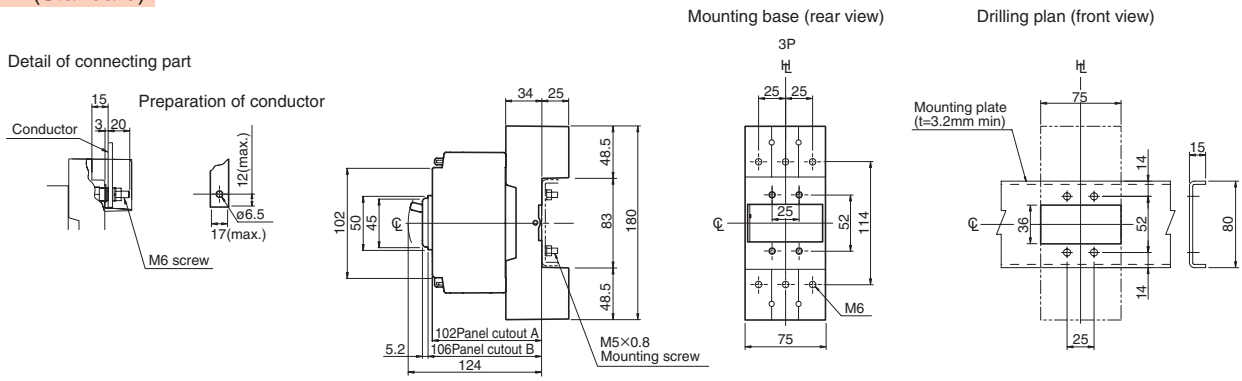

Flush-mounted

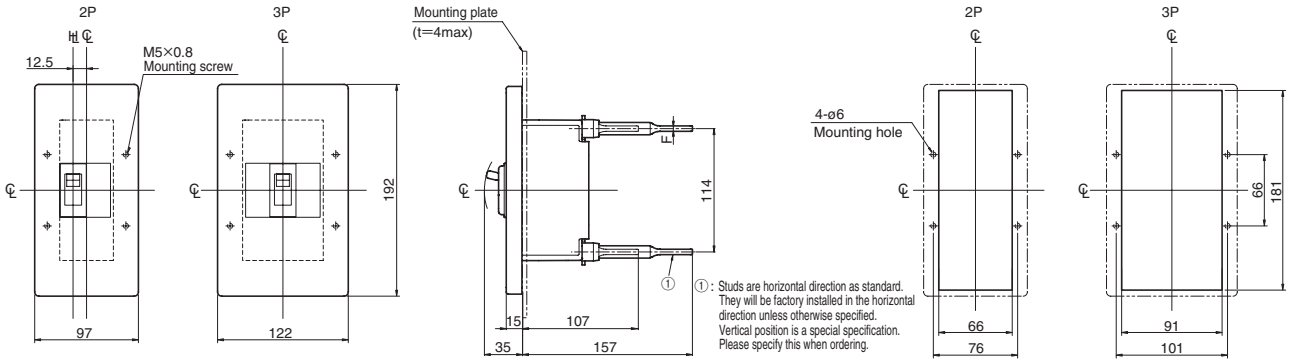

① : Studs are horizontal direction as standard. They will be factory installed in the horizontal direction unless otherwise specified. Vertical position is a special specification. Please specify this when ordering.

rated current (A)	A	B	C	D	E	F
60-125	12.5	8.5	4	13	16	5

Please check the rear side for a detailed outline drawing of the terminals.

Note) If you will arrange the studs vertically, please insulate them carefully with insulating tubes, insulating tape, or similar because the insulation distance between the studs is insufficient.

7 Characteristics and Outline Dimensions TemBreak PRO

Moulded Case Circuit Breakers

S125-SF

Ratings and Specifications

Frame size (A)				100			125				
Type				S125-SF							
Number of poles				2	3	4	2	3	4		
■ Ratings											
Rated current, A				15	50		125				
Calibrated at 40°C				20	60						
45°C				30	75						
				40	100						
Rated insulation voltage〔U_i〕 V				690			690				
Rated impulse withstand voltage〔U_{imp}〕 kV				8			8				
Rated short time withstand current 〔I_{cw}〕 kA				—			—				
Utilization Category				A			A				
■ Rated breaking capacity, kA											
JIS C 8201-2-1 Ann.1 Ann.2		AC	690V	6/3			6/3				
IEC 60947-2			500V	12/6			12/6				
I_{cu}/I_{cs}(sym)			440V	25/13			25/13				
			415V	30/15			30/15				
			380V	30/15			30/15				
			240V	50/25			50/25				
	①	DC	250V	25/13 ⑰ ㉗			25/13 ⑰ ㉗				
			125V	40/20 ⑰ ㉗			40/20 ⑰ ㉗				
NK		AC	690V	—			—				
I_{cu}/I_{cs}(sym)			450V	25/13			25/13				
			240V	50/25			50/25				
	①	DC	250V	25/13 ⑰ ㉗			25/13 ⑰ ㉗				
Weight (◉ marked standard type) kg				0.6	0.8	1.0	0.6	0.8	1.0		
■ Connections and Mountings											
Front-connected (FC)	Terminal screws			◉ ④			◉				
	With extension bars			○ ㊸			○ ㊸				
Rear-connected (RC)	Flat bar studs			○			○				
Plug-in (PM)	For switchboards	High-performance (PMB)		—			—				
		Standard (PMC)		—	○	—	—	○	—		
	For distribution boards (PMD) ㊺			○		—	○		—		
Flush-mounted (FP)	With flat bar studs			○		—	○		—		
Draw-out type (DR)				—			—				
TemPlug70 (PG)				○		—	○		—		
DIN rail mount				—	○ ⑪		—	○ ⑪			
■ Accessories (optional)			Symbol								
Externally mounted	Motor operator		M C	—			—				
	External operating handle	Breaker-mounted	H B	—	●		—	●			
		Door-mounted (variable depth)	H P	—	●		—	●			
	Toggle extension		H A	—			—				
	Mechanical interlock	Slide type	M S	—	●		—	●			
		Rear-connected type	M B	—			—				
		Link type	M L	—			—				
		Wire type	MW	—			—				
	Toggle holder		H H	●			●				
	Toggle lock		H L	●			●				
	Terminal cover	For front-connected	C F	●			●				
		For rear-connected and plug-in	C R	●			●				
	Terminal block for lead		T F	●			●				
	Door flange		D F	●			●				
CE marking				Yes			Yes				
Overcurrent trip mechanism				Thermal-magnetic			Thermal-magnetic				
Colour of cover				Grey Blue			Grey Blue				
Trip button (Colour)				Yes (Red)			Yes (Red)				
Suitability for isolation				Yes			Yes				
Reverse connection				Yes			Yes				

Notes:

◉ : Standard. This configuration used unless otherwise specified.
○ : Optional standard. Specify when ordering. ● : "yes" or "available". — : "no" or "not available".
① : DC is a special specification. When ordering, please specify DC. ④ : 50A or less is the M5 wire clamping terminal.
⑪ : Please order the DIN rail adapter separately. See page 6-152.
⑰ : See page 4-7 for the instantaneous trip value when using with DC.
㉗ : Applicable to only 2 poles breakers. ㊸ : For the extension bars, please place the order separately in parts.
㊺ : See page 7-172 for the outline dimensions.

Time/Current characteristic curves

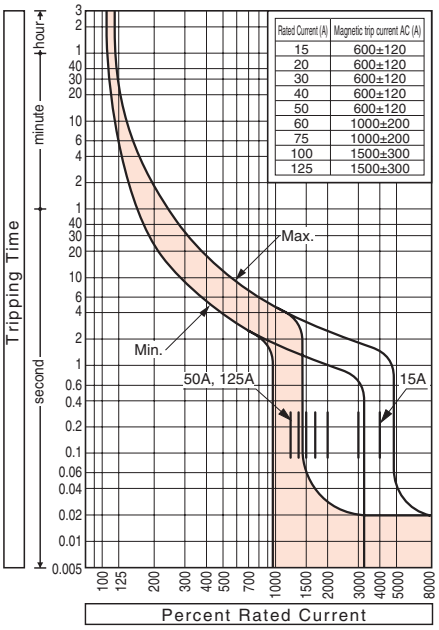

Ambient compensating curves

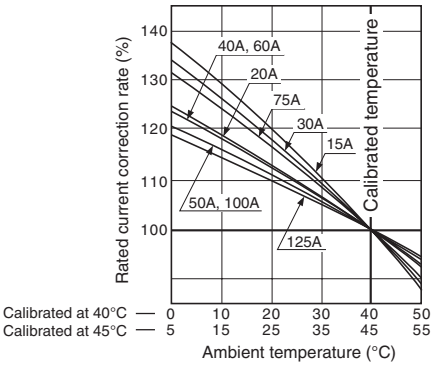

Combinations of Internally Mounted Accessories (Optional)

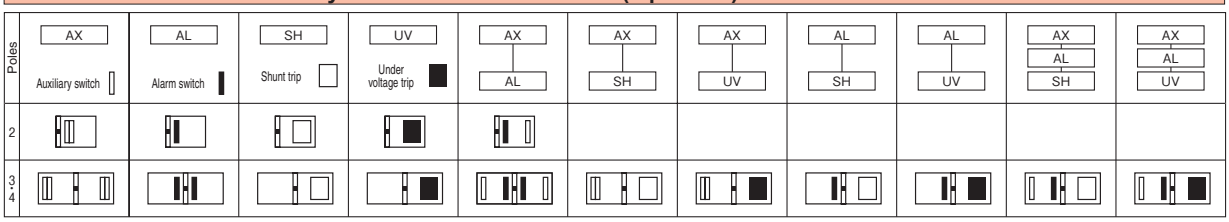

Note: For auxiliary switches or alarm switches, left-hand mounting has priority.

Outline dimensions (mm) S125-SF

Front-connected

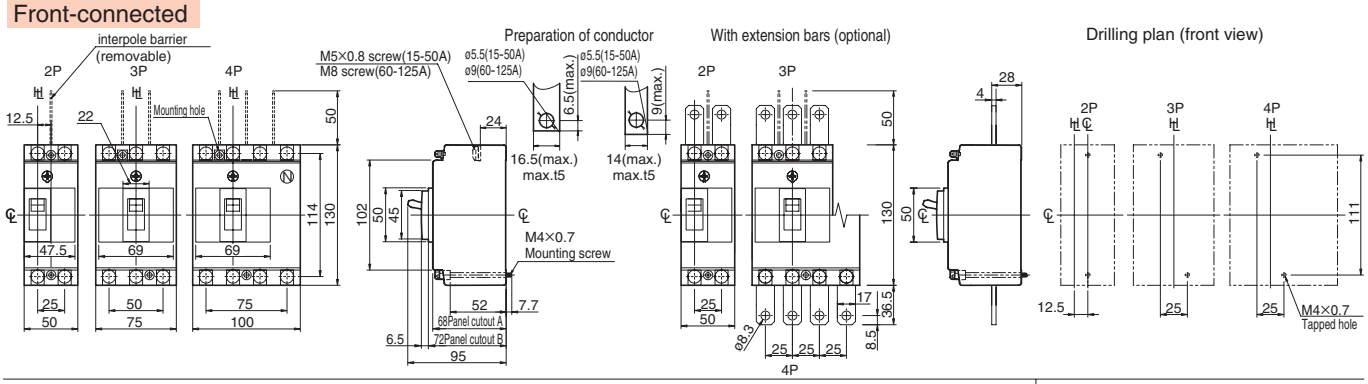

Rear-connected

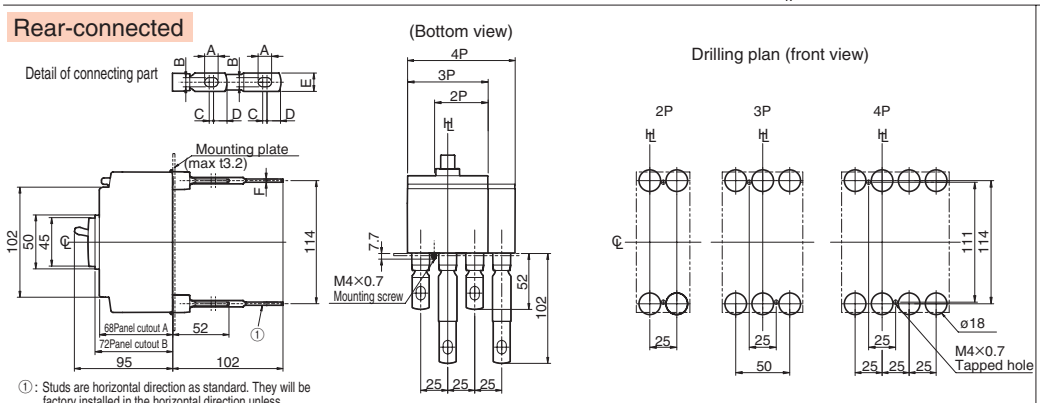

① : Studs are horizontal direction as standard. They will be factory installed in the horizontal direction unless otherwise specified. Vertical position is a special specification. Please specify this when ordering.

Note) If you will arrange the studs vertically, please insulate them carefully with insulating tubes, insulating tape, or similar because the insulation distance between the studs is insufficient.

rated current (A)	A	B	C	D	E	F
15-50	10.5	6.5	4	13	16	4
60-125	12.5	8.5	4	13	16	5

Panel cutout A (front view)

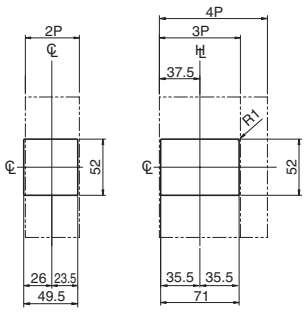

Panel cutout dimensions shown give an allowance of 1.0mm around the handle escutcheon.

Plug-in (Standard)

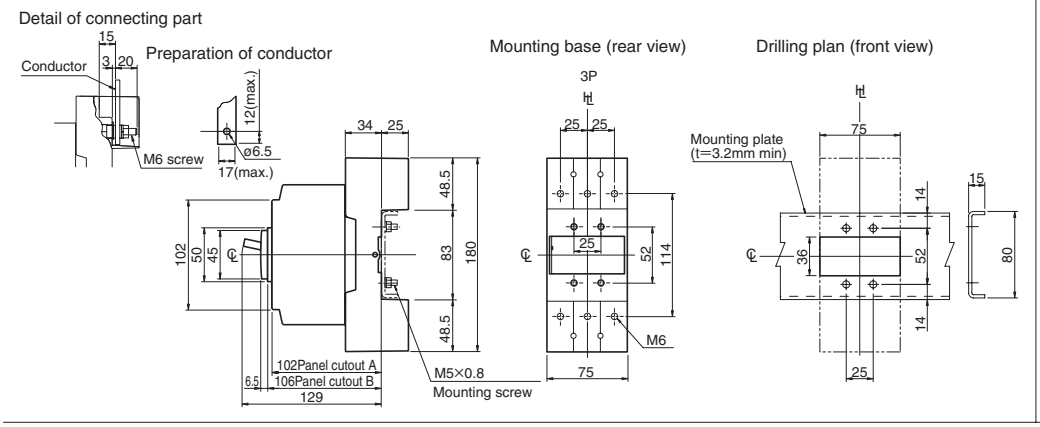

Panel cutout B (front view)

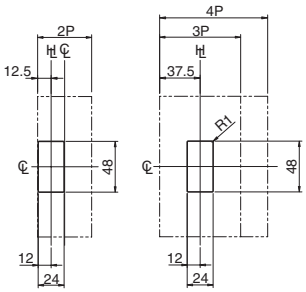

Panel cutout dimensions shown give an allowance of 1.0mm around the handle escutcheon.

Flush-mounted

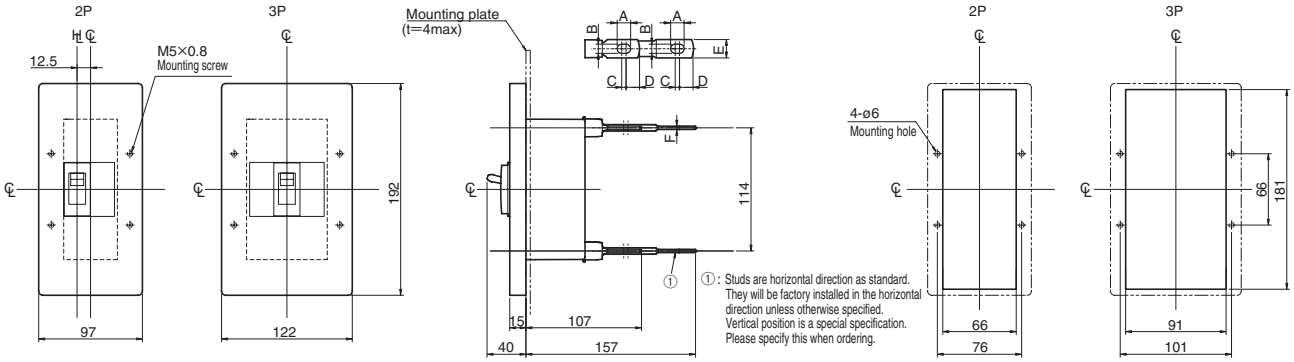

① : Studs are horizontal direction as standard. They will be factory installed in the horizontal direction unless otherwise specified. Vertical position is a special specification. Please specify this when ordering.

rated current (A)	A	B	C	D	E	F
15-50	10.5	6.5	4	13	16	4
60-125	12.5	8.5	4	13	16	5

Note) If you will arrange the studs vertically, please insulate them carefully with insulating tubes, insulating tape, or similar because the insulation distance between the studs is insufficient.

7 Characteristics and Outline Dimensions TemBreak PRO

Moulded Case Circuit Breakers

PS125-NF

Ratings and Specifications

Frame size (A)			100			125				
Type			PS125-NF							
Number of poles			2	3	4	2	3	4		
■ Ratings										
Rated current, A			15	50		125				
Calibrated at 40°C			20	60						
45°C			30	75						
			40	100						
Rated insulation voltage〔U_i〕 V			800			800				
Rated impulse withstand voltage〔U_{imp}〕 kV			8			8				
Rated short time withstand current 〔I_{cw}〕 kA			—			—				
Utilization Category			A			A				
■ Rated breaking capacity, kA										
JIS C 8201-2-1 Ann.1 Ann.2	AC	690V	6/6			6/6				
IEC 60947-2		500V	22/22			22/22				
I_{cu}/I_{cs}(sym)		440V	25/25			25/25				
		415V	36/36			36/36				
		380V	36/36			36/36				
		240V	50/50			50/50				
	① DC	250V	25/19 ⑰ ㉗			25/19 ⑰ ㉗				
		125V	25/19 ⑰ ㉗			25/19 ⑰ ㉗				
NK	AC	690V	6/6			6/6				
I_{cu}/I_{cs}(sym)		450V	25/25			25/25				
		240V	50/50			50/50				
	① DC	250V	25/19 ⑰ ㉗			25/19 ⑰ ㉗				
Weight (◉ marked standard type) kg			0.7	1.0	1.3	0.7	1.0	1.3		
■ Connections and Mountings										
Front-connected (FC)	Terminal screws		◉			◉				
	With extension bars		○ ㊸			○ ㊸				
Rear-connected (RC)	Flat bar studs		○			○				
Plug-in (PM) For switchboards	High-performance (PMB)		—	○ ㊿		—	○ ㊿			
	Standard (PMC)		○		—	○		—		
For distribution boards (PMD) ㊸			—	○	—	—	○	—		
Flush-mounted (FP)	With flat bar studs		○			○				
Draw-out type (DR)			—			—				
TemPlug70 (PG)			○		—	○		—		
DIN rail mount			—	○ ⑪		—	○ ⑪			
■ Accessories (optional)		Symbol								
Externally mounted: Motor operator		M C	—	●		—	●			
External operating handle	Breaker-mounted	H B	—	●		—	●			
	Door-mounted (variable depth)	H P	—	●		—	●			
Toggle extension		H A	—			—				
Mechanical interlock	Slide type	M S	—	●		—	●			
	Rear-connected type	M B	—			—				
	Link type	M L	—	●		—	●			
	Wire type	MW	—	●		—	●			
Toggle holder		H H	●			●				
Toggle lock		H L	●			●				
Terminal cover	For front-connected	C F	●			●				
	For rear-connected and plug-in	C R	●			●				
Terminal block for lead		T F	●			●				
Door flange		D F	●			●				
CE marking			Yes			Yes				
Overcurrent trip mechanism			Thermal-magnetic			Thermal-magnetic				
Colour of cover			Grey Blue			Grey Blue				
Trip button (Colour)			Yes (Red)			Yes (Red)				
Suitability for isolation			Yes			Yes				
Reverse connection			Yes			Yes				

Notes:

◉ : Standard. This configuration used unless otherwise specified.
○ : Optional standard. Specify when ordering. ● : "yes" or "available". — : "no" or "not available".
① : DC is a special specification. When ordering, please specify DC.
⑪ : Please order the DIN rail adapter separately. See page 6-152.
⑰ : See page 4-7 for the instantaneous trip value when using with DC. ㉗ : Applicable to only 2 poles breakers.
㊿ : A safety trip function is provided. ㊸ : For the extension bars, please place the order separately in parts.
㊸ : See page 7-171 for the outline dimensions.

Time/Current characteristic curves

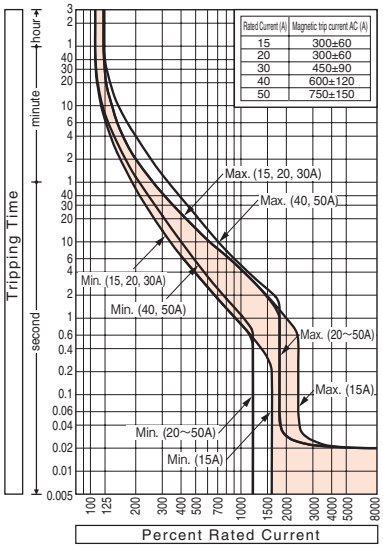

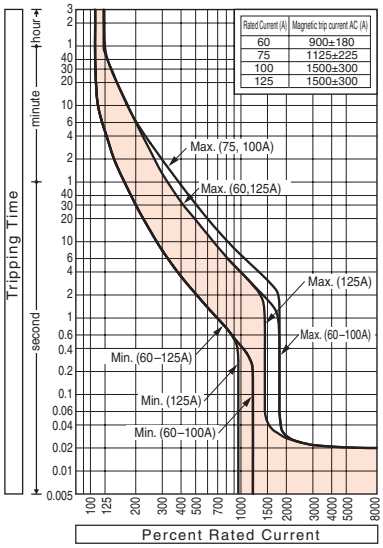

Ambient compensating curves

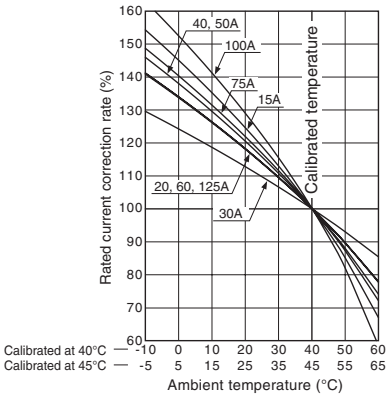

Combinations of Internally Mounted Accessories (Optional)

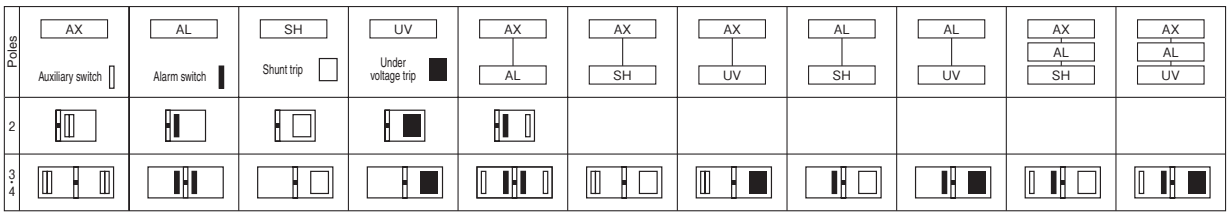

Note: For auxiliary switches or alarm switches, left-hand mounting has priority.

Outline dimensions (mm) PS125-NF

Front-connected

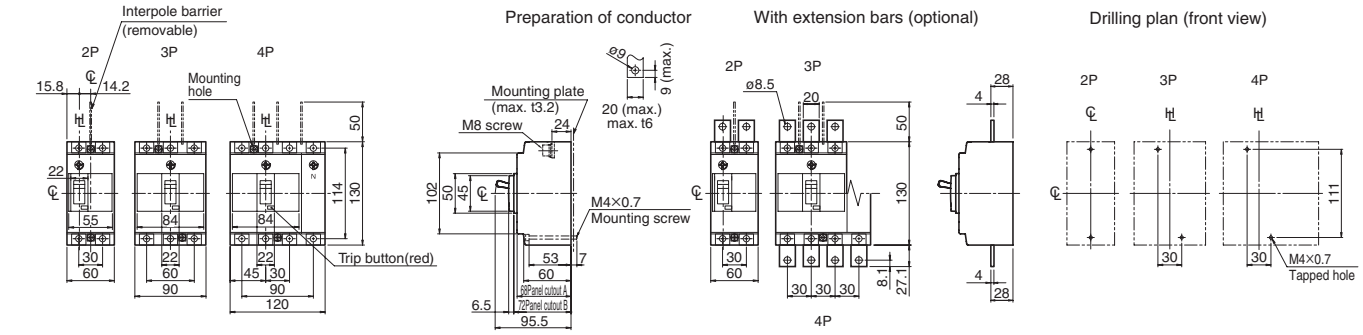

Rear-connected

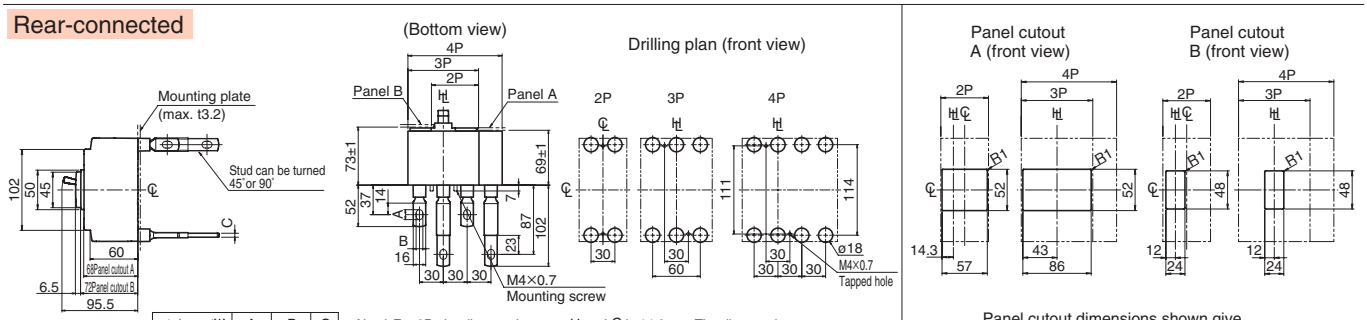

rated current[A]	A	B	C
15 — 50	12.5	ø8.5	4
60 — 125	12.5	ø8.5	5

Note) For 2P, the distance between ⊬ and ℄ is 14.2mm. The distance between the stud centreline and ℄ is 15mm.
Note) Studs are factory installed in horizontal direction both on the line and load sides.

Panel cutout dimensions shown give an allowance of 1.0mm around the handle escutcheon.

Plug-in (Standard)

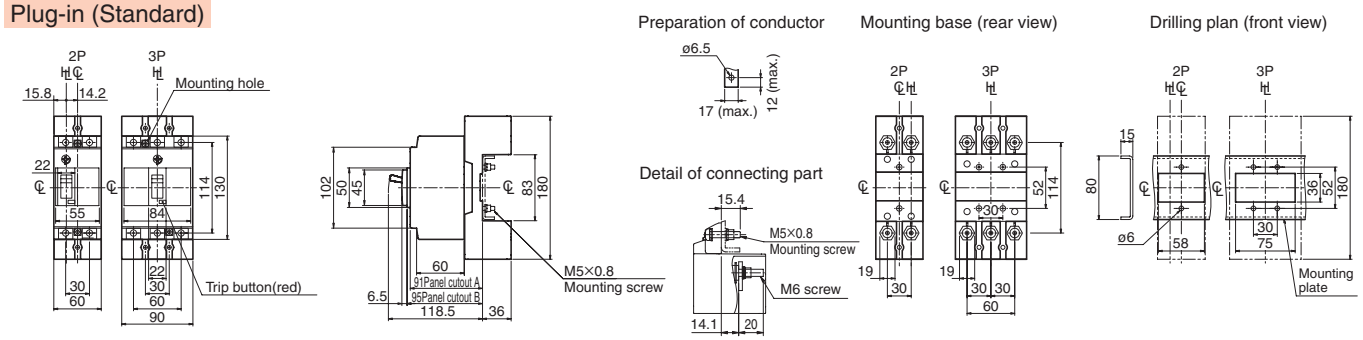

Plug-in(High-performance)

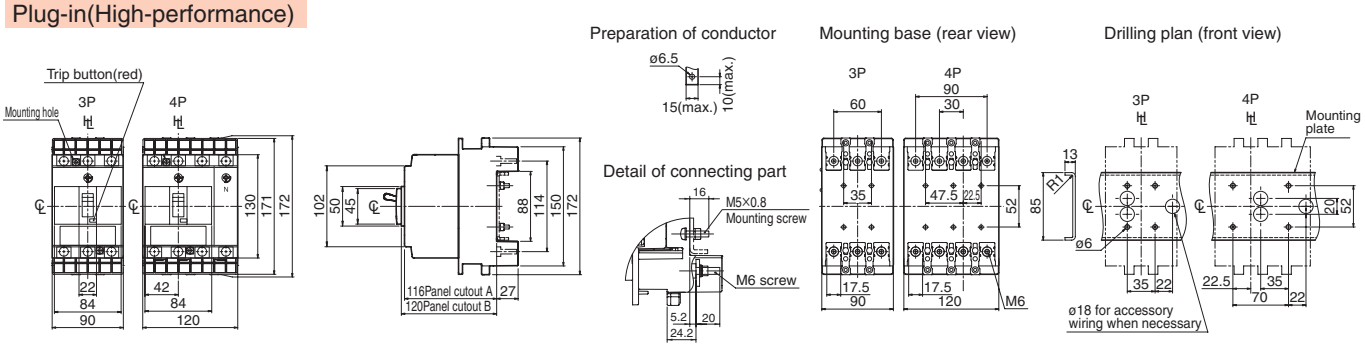

Flush-mounted

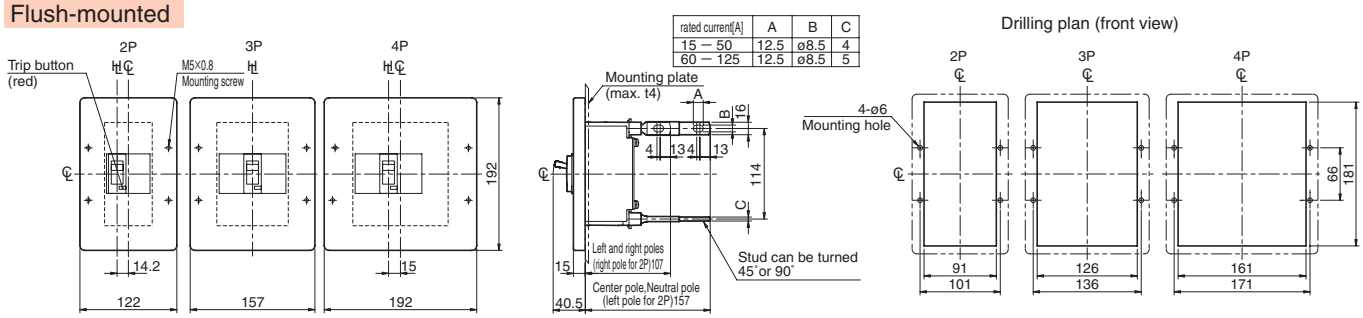

rated current[A]	A	B	C
15 — 50	12.5	ø8.5	4
60 — 125	12.5	ø8.5	5

Note: Studs are factory installed in horizontal direction both on the line and load sides.

7 Characteristics and Outline Dimensions TemBreak PRO

Moulded Case Circuit Breakers

PS50-PF, PS125-PF

Ratings and Specifications

Frame size (A)			50			100			125			
Type			PS50-PF			PS125-PF						
Number of poles			2	3	4	2	3	4	2	3	4	
■Ratings												
Rated current, A			15	50		15	50		125			
Calibrated at 40°C			20			20	60					
45°C			30			30	75					
			40			40	100					
Rated insulation voltage〔U_i〕 V			800			800			800			
Rated impulse withstand voltage〔U_{imp}〕 kV			8			8			8			
Rated short time withstand current 〔I_{cw}〕 kA			—			—			—			
Utilization Category			A			A			A			
■Rated breaking capacity, kA												
JIS C 8201-2-1 Ann.1 Ann.2	AC	690V	6/6			6/6			6/6			
IEC 60947-2		500V	30/22			30/22			30/22			
I_{cu}/I_{cs}(sym)		440V	50/35			50/35			50/35			
		415V	70/50			70/50			70/50			
		380V	70/50			70/50			70/50			
		240V	85/85			85/85			85/85			
	① DC	250V	40/40 ⑰ ㉗			40/40 ⑰ ㉗			40/40 ⑰ ㉗			
		125V	40/40 ⑰ ㉗			40/40 ⑰ ㉗			40/40 ⑰ ㉗			
NK	AC	690V	6/6			6/6			6/6			
I_{cu}/I_{cs}(sym)		450V	50/35			50/35			50/35			
		240V	85/85			85/85			85/85			
	① DC	250V	40/40 ⑰ ㉗			40/40 ㉗			40/40 ㉗			
Weight (◉ marked standard type) kg			0.7	1.0	1.3	0.7	1.0	1.3	0.7	1.0	1.3	
■Connections and Mountings												
Front-connected (FC)	Terminal screws		◉			◉			◉			
	With extension bars		○ ㊸			○ ㊸			○ ㊸			
Rear-connected (RC)	Flat bar studs		○			○			○			
Plug-in (PM) For switchboards	High-performance (PMB)		—	○ ㊿		—	○ ㊿		—	○ ㊿		
	Standard (PMC)		○		—	○		—	○		—	
For distribution boards (PMD) ㊸			—	○	—	—	○	—	—	○	—	
Flush-mounted (FP)	With flat bar studs		○			○			○			
Draw-out type (DR)			—			—			—			
TemPlug70 (PG)			○		—	○		—	○		—	
DIN rail mount			—	○ ⑪		—	○ ⑪		—	○ ⑪		
■Accessories (optional)		Symbol										
Externally mounted: Motor operator		M C	—	●		—	●		—	●		
External operating handle	Breaker-mounted	H B	—	●		—	●		—	●		
	Door-mounted (variable depth)	H P	—	●		—	●		—	●		
Toggle extension		H A	—			—			—			
Mechanical interlock	Slide type	M S	—	●		—	●		—	●		
	Rear-connected type	M B	—			—			—			
	Link type	M L	—	●		—	●		—	●		
	Wire type	MW	—	●		—	●		—	●		
Toggle holder		H H	●			●			●			
Toggle lock		H L	●			●			●			
Terminal cover	For front-connected	C F	●			●			●			
	For rear-connected and plug-in	C R	●			●			●			
Terminal block for lead		T F	●			●			●			
Door flange		D F	●			●			●			
CE marking			Yes			Yes			Yes			
Overcurrent trip mechanism			Thermal-magnetic			Thermal-magnetic			Thermal-magnetic			
Colour of cover			Grey Blue			Grey Blue			Grey Blue			
Trip button (Colour)			Yes (Red)			Yes (Red)			Yes (Red)			
Suitability for isolation			Yes			Yes			Yes			
Reverse connection			Yes			Yes			Yes			

Notes:

◉ : Standard. This configuration used unless otherwise specified.
○ : Optional standard. Specify when ordering. ● : "yes" or "available". — : "no" or "not available".
① : DC is a special specification. When ordering, please specify DC.
⑪ : Please order the DIN rail adapter separately. See page 6-152.
⑰ : See page 4-7 for the instantaneous trip value when using with DC. ㉗ : Applicable to only 2 poles breakers.
㊿ : A safety trip function is provided. ㊸ : For the extension bars, please place the order separately in parts.
㊸ : See page 7-171 for the outline dimensions.

Time/Current characteristic curves

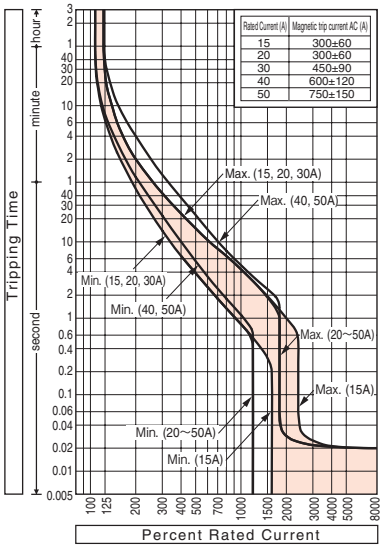

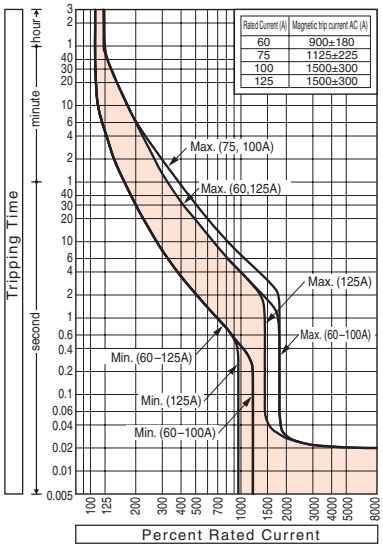

Ambient compensating curves

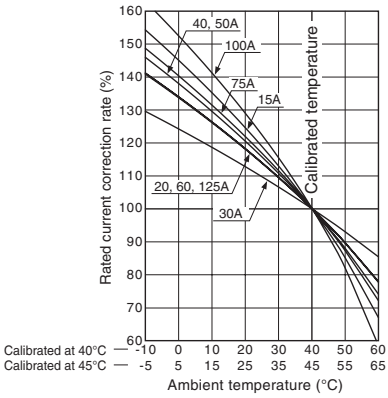

Combinations of Internally Mounted Accessories (Optional)

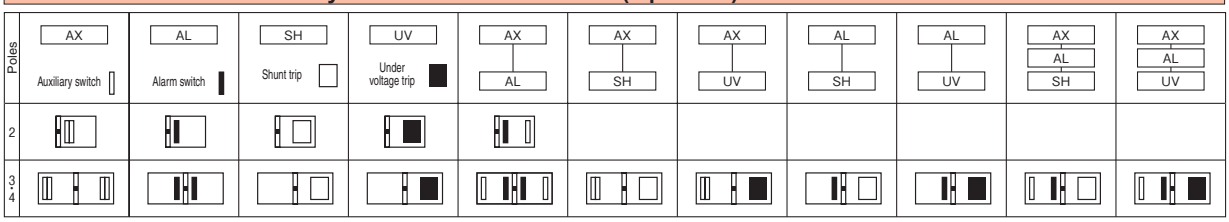

Note: For auxiliary switches or alarm switches, left-hand mounting has priority.

Outline dimensions (mm) — PS50-PF, PS125-PF

Front-connected

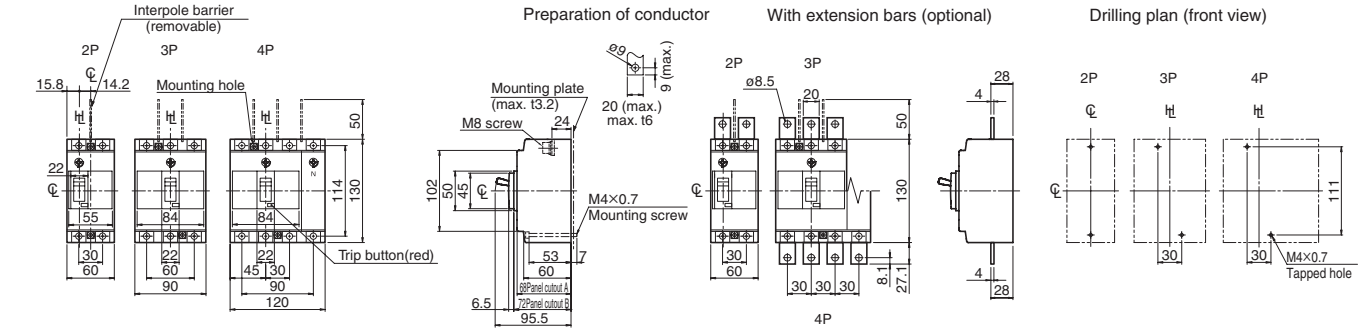

Rear-connected

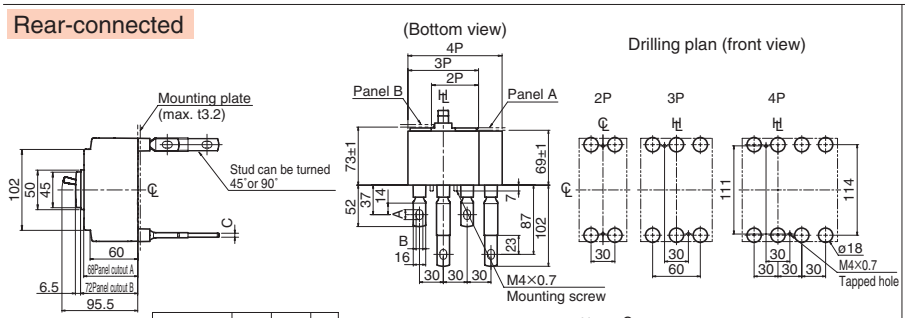

Rated current[A]	A	B	C
15 — 50	12.5	ø8.5	4
60 — 125	12.5	ø8.5	5

Note) For 2P, the distance between ⊬ and ℄ is 14.2mm. The distance between the stud centreline and ℄ is 15mm.
Note) Studs are factory installed in horizontal direction both on the line and load sides.

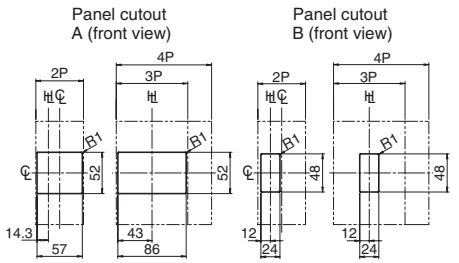

Panel cutout dimensions shown give an allowance of 1.0mm around the handle escutcheon.

Plug-in (Standard)

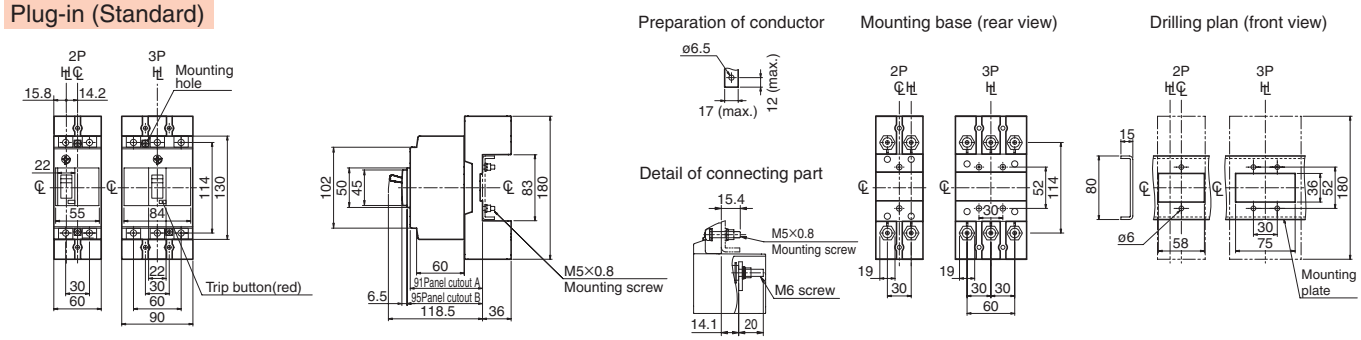

Plug-in (High-performance)

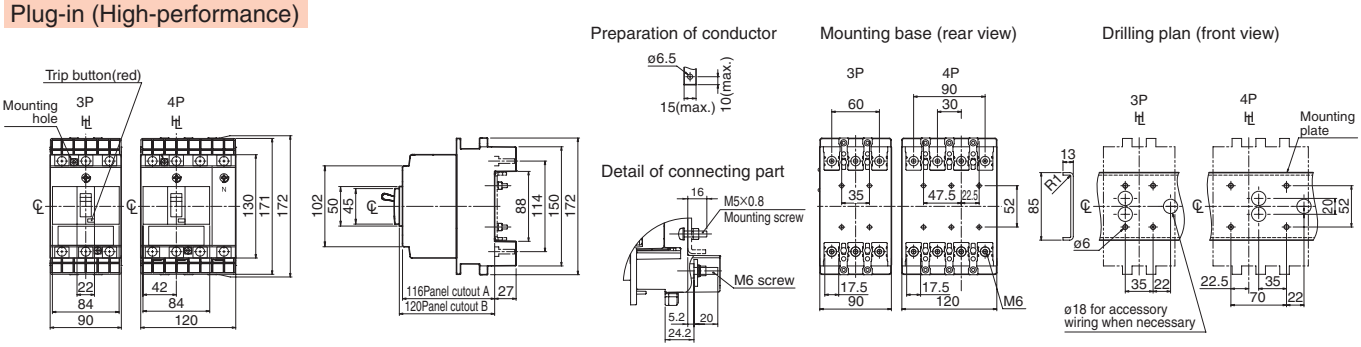

Flush-mounted

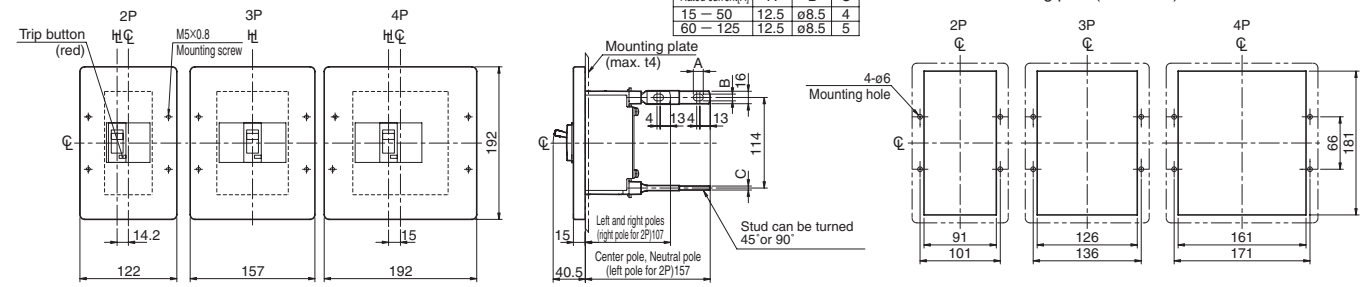

Rated current[A]	A	B	C
15 — 50	12.5	ø8.5	4
60 — 125	12.5	ø8.5	5

Note: Studs are factory installed in horizontal direction both on the line and load sides.

7 Characteristics and Outline Dimensions

TemBreak PRO

Moulded Case Circuit Breakers

PS125-NE

Ratings and Specifications

Frame size (A)			100		125	
Type			PS125-NE			
Number of poles			3	4	3	4
■ Ratings						
Rated current, A			Adjustable		Adjustable	
Calibrated at 40°C			I_n=100		I_n=125	
45°C			40	63	125	
⑱⓪			50	75		
			60	100 ⑥①		
Rated insulation voltage〔U_i〕 V			800		800	
Rated impulse withstand voltage〔U_{imp}〕 kV			8		8	
Rated short time withstand current 〔I_{cw}〕 kA			—		—	
Utilization Category			A		A	
■ Rated breaking capacity, kA						
JIS C 8201-2-1 Ann.1 Ann.2	AC	690V	6/6		6/6	
IEC 60947-2		500V	22/22		22/22	
I_{cu}/I_{cs}(sym)		440V	25/25		25/25	
		415V	36/36		36/36	
		380V	36/36		36/36	
		240V	—		—	
	DC	250V	—		—	
		125V	—		—	
NK	AC	690V	6/6		6/6	
I_{cu}/I_{cs}(sym)		450V	25/25		25/25	
		240V	50/50		50/50	
	DC	250V	—		—	
Weight (◉ marked standard type) kg			1.0	1.3	1.0	1.3
■ Connections and Mountings						
Front-connected (FC)	Terminal screws		◉		◉	
	With extension bars		○ ⑤③		○ ⑤③	
Rear-connected (RC)	Flat bar studs		○		○	
Plug-in (PM) For switchboards	High-performance (PMB)		○ ⑤⓪		○ ⑤⓪	
	Standard (PMC)		○	—	○	—
For distribution boards (PMD) ⑧③			○	—	○	—
Flush-mounted (FP)	With flat bar studs		○		○	
Draw-out type (DR)			—		—	
TemPlug70 (PG)			○	—	○	—
DIN rail mount			○ ⑪		○ ⑪	
■ Accessories (optional)		Symbol				
Externally mounted: Motor operator		M C	●		●	
External operating handle	Breaker-mounted	H B	●		●	
	Door-mounted (variable depth)	H P	●		●	
Toggle extension		H A	—		—	
Mechanical interlock	Slide type	M S	●		●	
	Rear-connected type	M B	—		—	
	Link type	M L	●		●	
	Wire type	M W	●		●	
Toggle holder		H H	●		●	
Toggle lock		H L	●		●	
Terminal cover	For front-connected	C F	●		●	
	For rear-connected and plug-in	C R	●		●	
Terminal block for lead		T F	●		●	
Door flange		D F	●		●	
CE marking			Yes		Yes	
Overcurrent trip mechanism			Electronic		Electronic	
Colour of cover			Grey Blue		Grey Blue	
Trip button (Colour)			Yes (Red)		Yes (Red)	
Suitability for isolation			Yes		Yes	
Reverse connection			Yes		Yes	

Notes:

◉ : Standard. This configuration used unless otherwise specified.
○ : Optional standard. Specify when ordering. ● : "yes" or "available". — : "no" or "not available". ⑪ : Please order the DIN rail adapter separately. See page 6-152.
⑤⓪ : A safety trip function is provided. ⑤③ : For the extension bars, please place the order separately in parts. ⑥① : Does not comply with Electrical Appliances and Materials Safety Act at rated current 100A or less because it is an adjustable product. Also, it cannot be used at voltages other than rated operational voltage 380V to 690V AC. Please contact us for details. ⑧⓪ : If the ambient temperature exceeds 45° C, reduce the operating current in accordance with [2] Environmental operating conditions of the chapter 8.
⑧③ : See page 7-171 for the outline dimensions.

Time/Current characteristic curves

• Long time/Short time trip characteristics

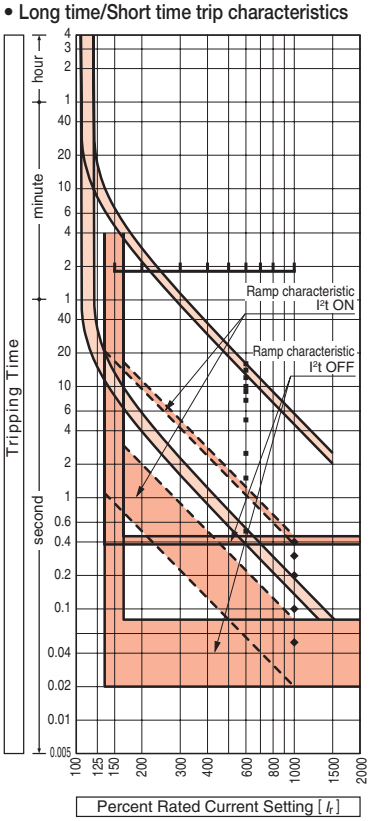

• Instantaneous trip characteristics

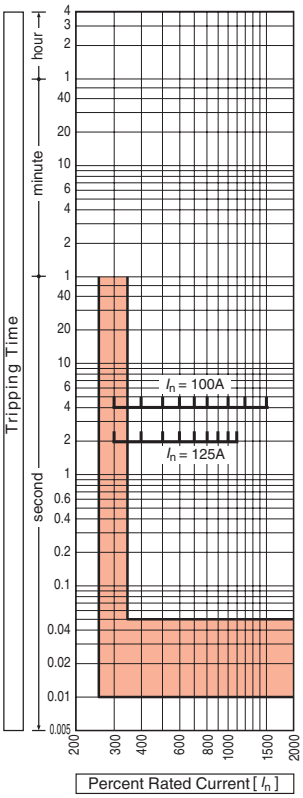

Note: See page 6-4 for ground fault trip and preferential trip alarm characteristics.

Overcurrent tripping characteristics

TPOP OCR (LSIG) (I_n)=100A, 125A

Rated current settings (A) (I_r)=(I_r1)×(I_r2)	When (I_n)=100A (I_r1) (A)=40, 50, 60, 63, 75, 100 adjustable When (I_n)=125A (I_r1) (A)=125 adjustable
	(I_r2)= 0.91, 0.92, 0.93, 0.94, 0.95, 0.96, 0.97, 0.98, 0.99, 1.00
Long time-delay time settings (s) : (t_r)	0.5, 1.5, 2.5, 5, 7.5, 9, 10, 12, 14, 16 adjustable at (I_r)×600%
	Time-delay setting tolerance –20% –20ms or more +0% +30ms or less
Short time-delay pick-up current (A) : (I_{sd})	(I_r)×1.5, 2, 3, 4, 5, 6, 7, 8, 10 or OFF
	Current setting tolerance within ±10%
Short time-delay time settings (ms) : (t_{sd})	50, 100, 200, 300, 400 adjustable
	Ramp characteristics I²t: ON or OFF However, definite time-delay characteristics with (I_r)×10 or more
	When (t_{sd})=50ms Time-delay setting tolerance –30ms or more +30ms or less When (t_{sd})=100ms to 400ms Time-delay setting tolerance –20ms or more +50ms or less
Instantaneous trip pick-up current (A) : (I_i)	When (I_n)=100A (I_n)×3, 4, 5, 6, 7, 8, 10, 12, 15 adjustable
	When (I_n)=125A (I_n)×3, 4, 5, 6, 7, 8, 9, 10, 11 adjustable
	Current setting tolerance within ±15%
Ground fault trip pick-up current (A) : (I_g)	3P for 3ø3W (3P 3ø4W not supported) (I_n)×20% or OFF Current setting tolerance within ±10%
Ground fault trip time settings (ms) : (t_g)	200 Time-delay setting tolerance –20ms or more +50ms or less
Preferential trip alarm pick-up current (A) : (I_p)	(I_r)×80% Current setting tolerance within ±10%
Preferential trip alarm time settings (s) : (t_p)	(t_r)×50% Time-delay setting tolerance –20% –20ms or more +0% +30ms or less

Note 1: If not otherwise specified, the product will be delivered with the underlined standard setting values.
Note 2: The TPOT type OCR (LSI) only has long time-delay trip, short time-delay trip, instantaneous trip, and preferential trip alarm.

Combinations of Internally Mounted Accessories (Optional)

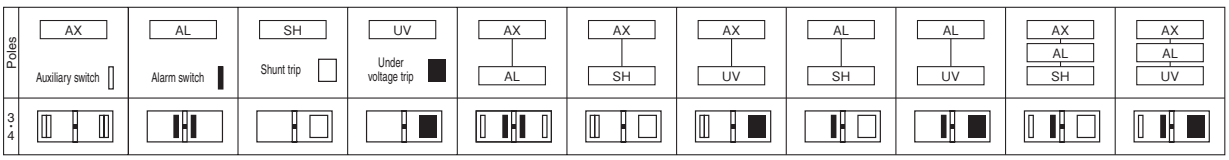

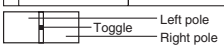

Note: For auxiliary switches or alarm switches, left-hand mounting has priority.

Outline dimensions (mm) PS125-NE

Front-connected

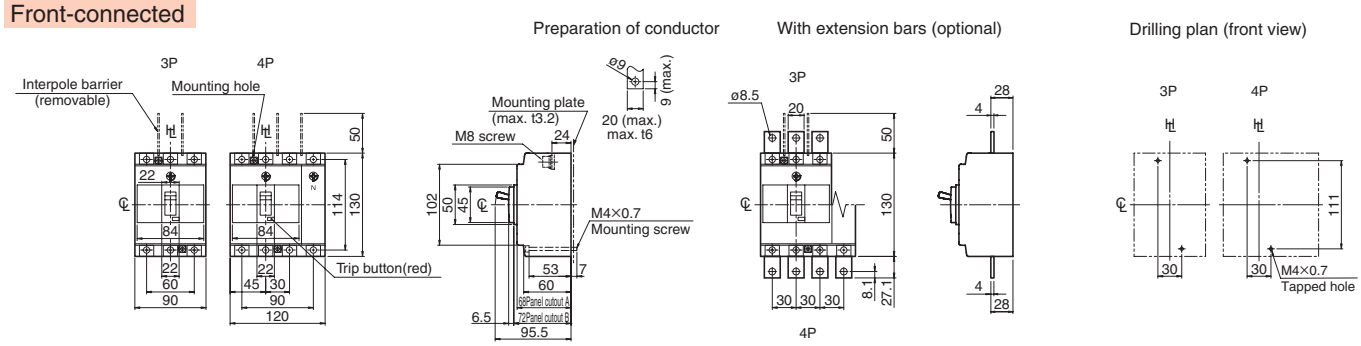

Rear-connected

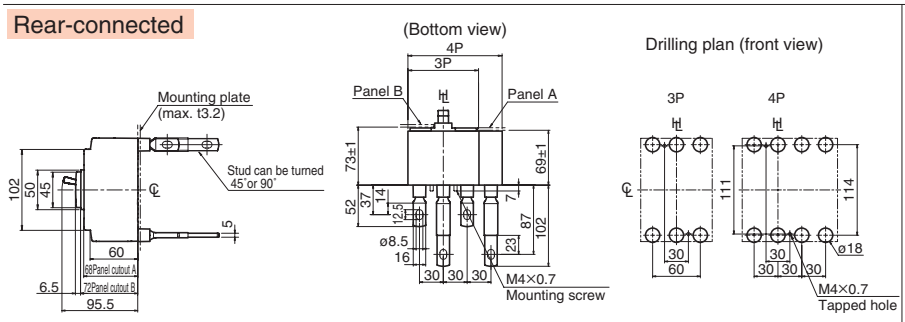

Note: Studs are factory installed in horizontal direction both on the line and load sides.

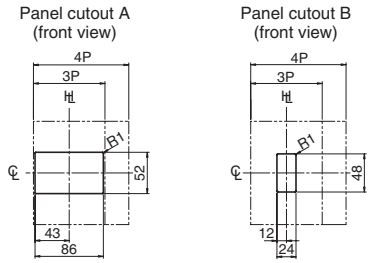

Panel cutout dimensions shown give an allowance of 1.0mm around the handle escutcheon.

Plug-in (Standard)

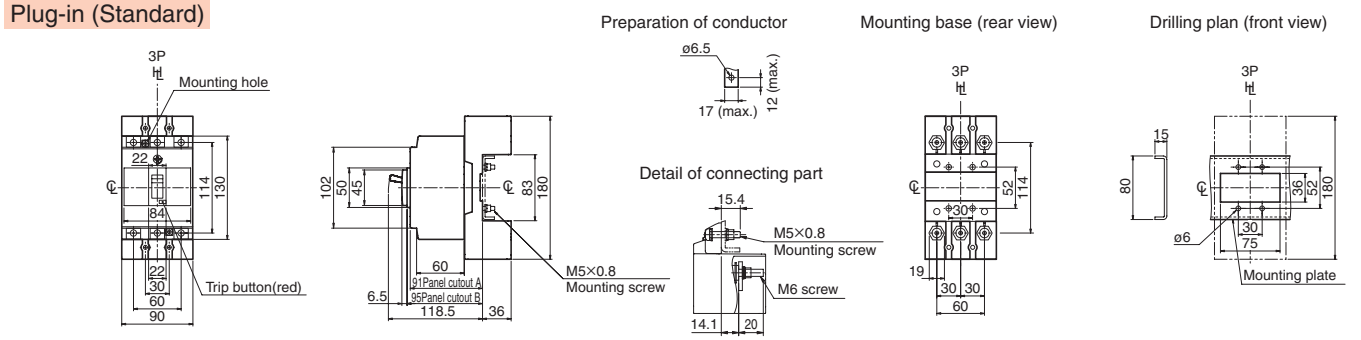

Plug-in (High-performance)

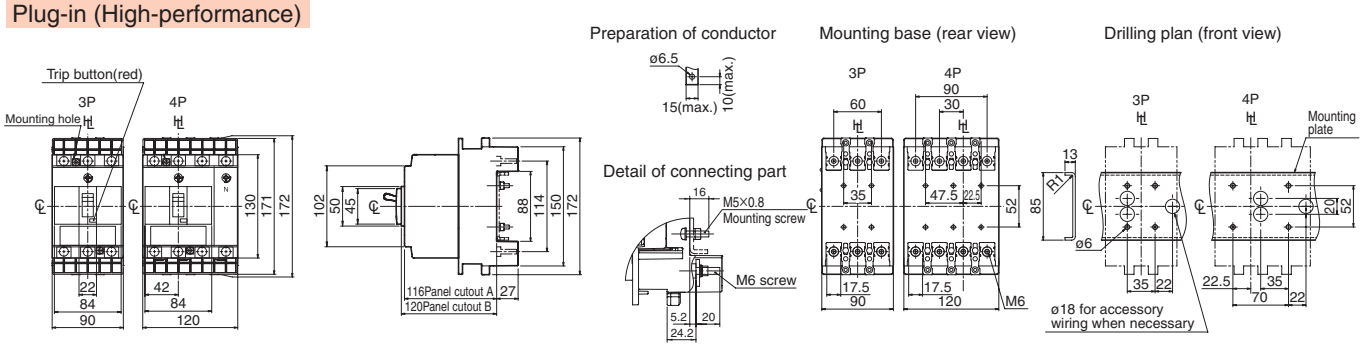

Flush-mounted

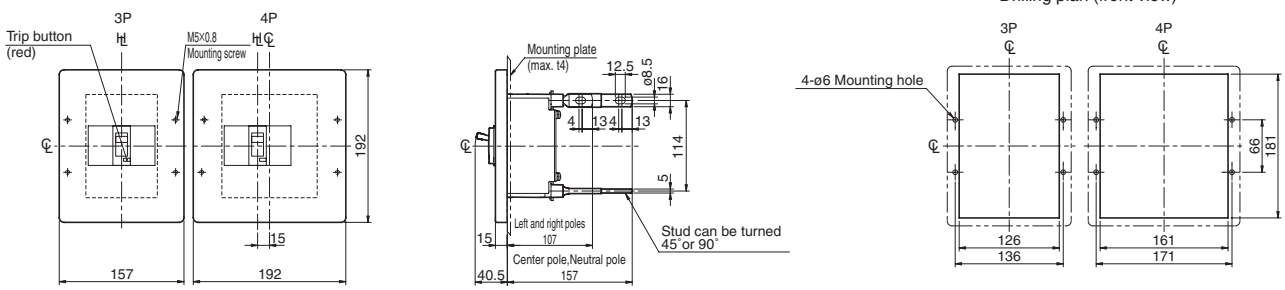

Note: Studs are factory installed in horizontal direction both on the line and load sides.

7 Characteristics and Outline Dimensions

TemBreak PRO

Moulded Case Circuit Breakers

PS125-PE

Ratings and Specifications

Frame size (A)			100		125	
Type			PS125-PE			
Number of poles			3	4	3	4
■ Ratings						
Rated current, A			Adjustable		Adjustable	
Calibrated at 40°C			I_n=100		I_n=125	
45°C			40	63	125	
⑱⓪			50	75		
			60	100 ⑥①		
Rated insulation voltage〔U_i〕 V			800		800	
Rated impulse withstand voltage〔U_{imp}〕 kV			8		8	
Rated short time withstand current 〔I_{cw}〕 kA			—		—	
Utilization Category			A		A	
■ Rated breaking capacity, kA						
JIS C 8201-2-1 Ann.1 Ann.2	AC	690V	6/6		6/6	
IEC 60947-2		500V	30/22		30/22	
I_{cu}/I_{cs}(sym)		440V	50/35		50/35	
		415V	70/50		70/50	
		380V	70/50		70/50	
		240V	—		—	
	DC	250V	—		—	
		125V	—		—	
NK	AC	690V	6/6		6/6	
I_{cu}/I_{cs}(sym)		450V	50/35		50/35	
		240V	85/85		85/85	
	DC	250V	—		—	
Weight (◉ marked standard type) kg			1.0	1.3	1.0	1.3
■ Connections and Mountings						
Front-connected (FC)	Terminal screws		◉		◉	
	With extension bars		○ ⑤③		○ ⑤③	
Rear-connected (RC)	Flat bar studs		○		○	
Plug-in (PM) For switchboards	High-performance (PMB)		○ ⑤⓪		○ ⑤⓪	
	Standard (PMC)		○	—	○	—
For distribution boards (PMD) ⑧③			○	—	○	—
Flush-mounted (FP)	With flat bar studs		○		○	
Draw-out type (DR)			—		—	
TemPlug70 (PG)			○	—	○	—
DIN rail mount			○ ⑪		○ ⑪	
■ Accessories (optional)		Symbol				
Externally mounted: Motor operator		M C	●		●	
External operating handle	Breaker-mounted	H B	●		●	
	Door-mounted (variable depth)	H P	●		●	
Toggle extension		H A	—		—	
Mechanical interlock	Slide type	M S	●		●	
	Rear-connected type	M B	—		—	
	Link type	M L	●		●	
	Wire type	M W	●		●	
Toggle holder		H H	●		●	
Toggle lock		H L	●		●	
Terminal cover	For front-connected	C F	●		●	
	For rear-connected and plug-in	C R	●		●	
Terminal block for lead		T F	●		●	
Door flange		D F	●		●	
CE marking			Yes		Yes	
Overcurrent trip mechanism			Electronic		Electronic	
Colour of cover			Grey Blue		Grey Blue	
Trip button (Colour)			Yes (Red)		Yes (Red)	
Suitability for isolation			Yes		Yes	
Reverse connection			Yes		Yes	

Notes:

◉ : Standard. This configuration used unless otherwise specified. ○ : Optional standard. Specify when ordering. ● : "yes" or "available". — : "no" or "not available".
⑪ : Please order the DIN rail adapter separately. See page 6-152. ⑤⓪ : A safety trip function is provided. ⑤③ : For the extension bars, please place the order separately in parts. ⑥① : Does not comply with Electrical Appliances and Materials Safety Act at rated current 100A or less because it is an adjustable product. Also, it cannot be used at voltages other than rated operational voltage 380V to 690V AC. Please contact us for details. ⑱⓪ : If the ambient temperature exceeds 45°C, reduce the operating current in accordance with 2 Environmental operating conditions of the chapter 8.
⑧③ : See page 7-171 for the outline dimensions.

Time/Current characteristic curves

• Long time/Short time trip characteristics

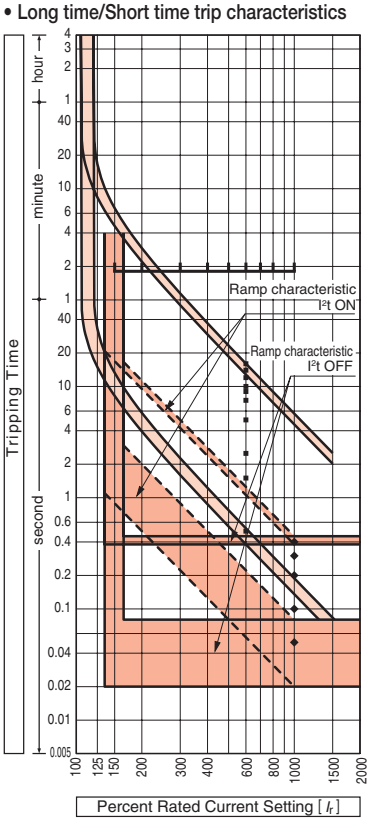

• Instantaneous trip characteristics

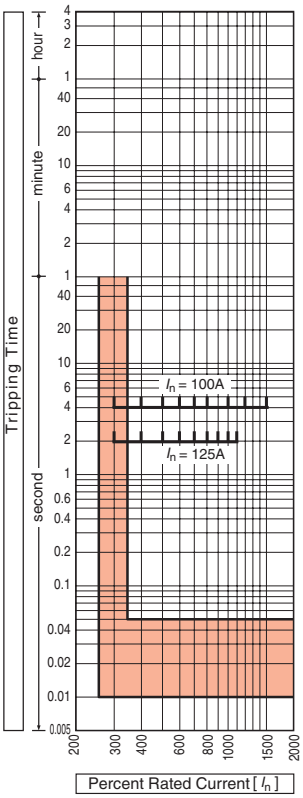

Note: See page 6-4 for ground fault trip and preferential trip alarm characteristics.

Overcurrent tripping characteristics

TPOP OCR (LSIG) (I_n)=100A, 125A

Rated current settings (A) (I_r)=(I_r1)×(I_r2)	When (I_n)=100A (I_r1) (A)=40, 50, 60, 63, 75, 100 adjustable When (I_n)=125A (I_r1) (A)=125 adjustable
	(I_r2)= 0.91, 0.92, 0.93, 0.94, 0.95, 0.96, 0.97, 0.98, 0.99, 1.00
Long time-delay time settings (s) : (t_r)	0.5, 1.5, 2.5, 5, 7.5, 9, 10, 12, 14, 16 adjustable at (I_r)×600%
	Time-delay setting tolerance –20% –20ms or more +0% +30ms or less
Short time-delay pick-up current (A) : (I_{sd})	(I_r)×1.5, 2, 3, 4, 5, 6, 7, 8, 10 or OFF
	Current setting tolerance within ±10%
Short time-delay time settings (ms) : (t_{sd})	50, 100, 200, 300, 400 adjustable
	Ramp characteristics I²t: ON or OFF However, definite time-delay characteristics with (I_r)×10 or more
	When (t_{sd})=50ms Time-delay setting tolerance –30ms or more +30ms or less When (t_{sd})=100ms to 400ms Time-delay setting tolerance –20ms or more +50ms or less
Instantaneous trip pick-up current (A) : (I_i)	When (I_n)=100A (I_n)×3, 4, 5, 6, 7, 8, 10, 12, 15 adjustable
	When (I_n)=125A (I_n)×3, 4, 5, 6, 7, 8, 9, 10, 11 adjustable
	Current setting tolerance within ±15%
Ground fault trip pick-up current (A) : (I_g)	3P for 3ø3W (3P 3ø4W not supported) (I_n)×20% or OFF Current setting tolerance within ±10%
Ground fault trip time settings (ms) : (t_g)	200 Time-delay setting tolerance –20ms or more +50ms or less
Preferential trip alarm pick-up current (A) : (I_p)	(I_r)×80% Current setting tolerance within ±10%
Preferential trip alarm time settings (s) : (t_p)	(t_r)×50% Time-delay setting tolerance –20% –20ms or more +0% +30ms or less

Note 1: If not otherwise specified, the product will be delivered with the underlined standard setting values.
Note 2: The TPOT type OCR (LSI) only has long time-delay trip, short time-delay trip, instantaneous trip, and preferential trip alarm.

Combinations of Internally Mounted Accessories (Optional)

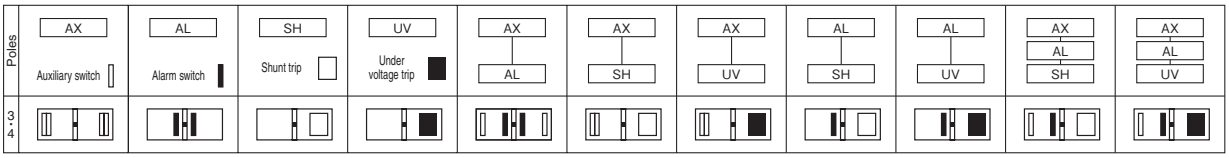

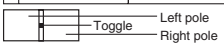

Note: For auxiliary switches or alarm switches, left-hand mounting has priority.

Outline dimensions (mm) PS125-PE

Front-connected

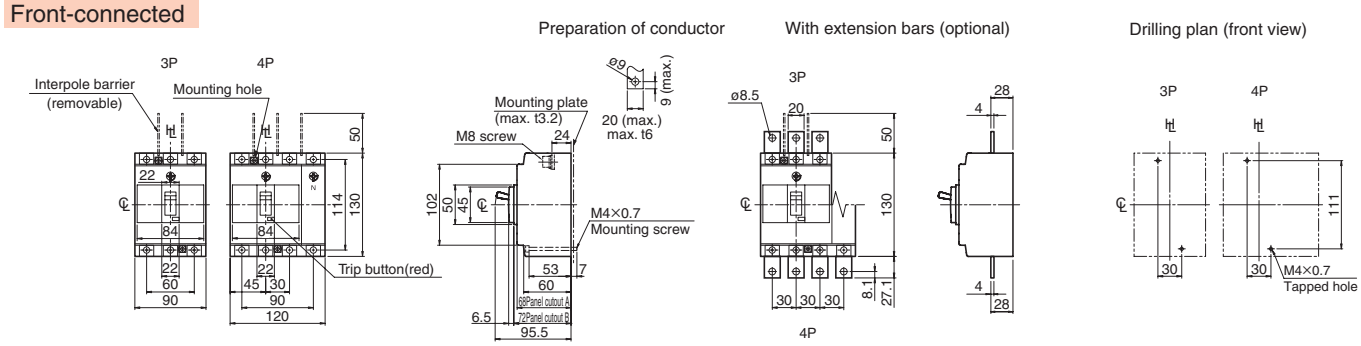

Rear-connected

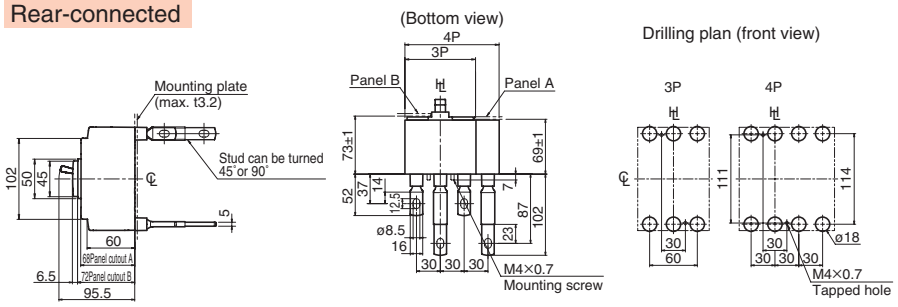

Note: Studs are factory installed in horizontal direction both on the line and load sides.

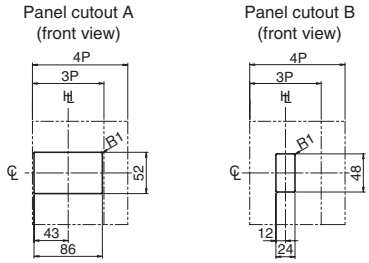

Panel cutout dimensions shown give an allowance of 1.0mm around the handle escutcheon.

Plug-in (Standard)

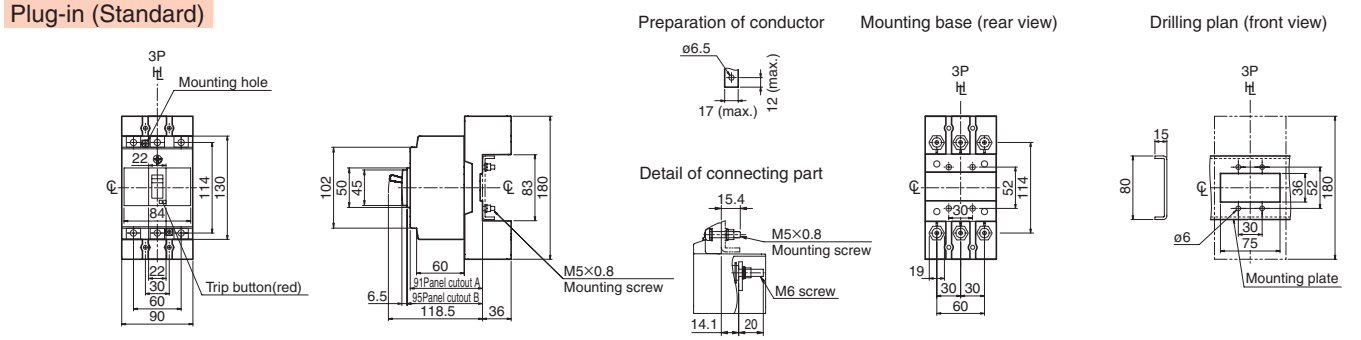

Plug-in (High-performance)

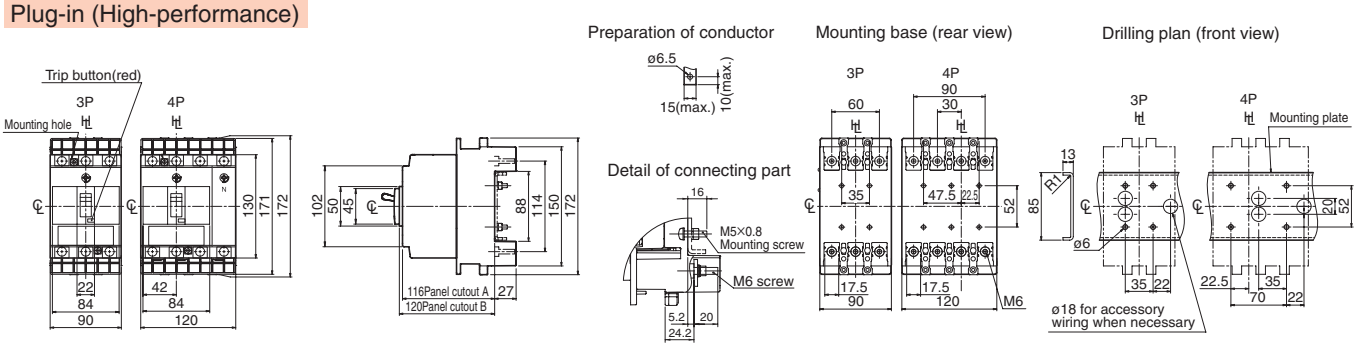

Flush-mounted

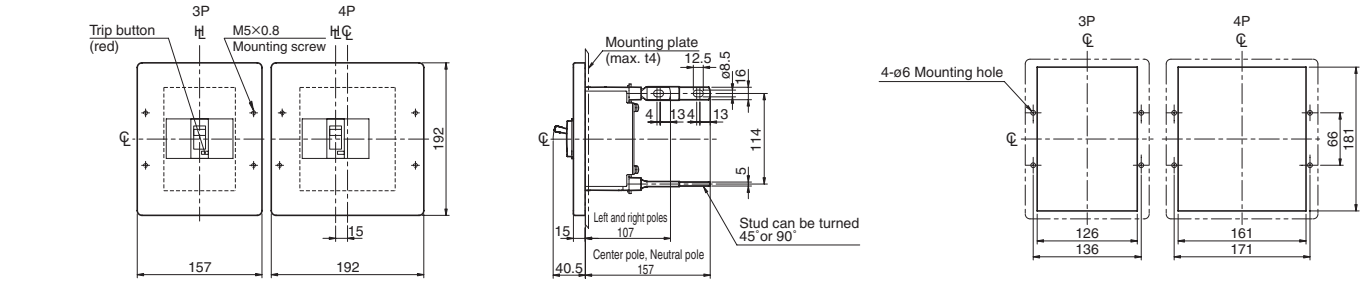

Note: Studs are factory installed in horizontal direction both on the line and load sides.

7 Characteristics and Outline Dimensions

TemBreak PRO

Moulded Case Circuit Breakers

S100-GF

Ratings and Specifications

Frame size (A)			100			
Type			**S100-GF**			
Number of poles			2	3	4	
■ Ratings						
Rated current, A			15	50		
Calibrated at 40°C			20	60		
45°C			30	75		
			40	100		
Rated insulation voltage〔U_i〕 V			690			
Rated impulse withstand voltage〔U_{imp}〕 kV			8			
Rated short time withstand current 〔I_{cw}〕 kA			—			
Utilization Category			A			
■ Rated breaking capacity, kA						
JIS C 8201-2-1 Ann.1 Ann.2	AC	690V	6/6			
IEC 60947-2		500V	25/22			
I_{cu}/I_{cs}(sym)		440V	50/25			
		415V	65/33			
		380V	65/33			
		240V	85/85			
	① DC	250V	40/40 ㉗			
		125V	40/40 ㉗			
NK	AC	690V	6/6			
I_{cu}/I_{cs}(sym)		450V	50/25			
		240V	85/85			
	① DC	250V	40/40 ㉗			
Weight (◉ marked standard type) kg			0.7	1.1	1.4	
■ Connections and Mountings						
Front-connected (FC)	Terminal screws		◉			
	With extension bars		○ ㊸			
Rear-connected (RC)	Flat bar studs		○			
Plug-in (PM) For switchboards	High-performance (PMB)		○ ㊶			
	Standard (PMC)		—	○	—	
For distribution boards (PMD) ㊼			—			
Flush-mounted (FP)	With flat bar studs		○			
Draw-out type (DR)			—			
TemPlug70 (PG)			○		—	
DIN rail mount			—	○ ⑪		
■ Accessories (optional)		Symbol				
Externally mounted: Motor operator		M C	—	●		
External operating handle	Breaker-mounted	H B	—	●		
	Door-mounted (variable depth)	H P	—	●		
Toggle extension		H A	—			
Mechanical interlock	Slide type	M S	—	●		
	Rear-connected type	M B	—			
	Link type	M L	—	●		
	Wire type	MW	—	●		
Toggle holder		H H	●			
Toggle lock		H L	●			
Terminal cover	For front-connected	C F	●			
	For rear-connected and plug-in	C R	●			
Terminal block for lead		T F	●			
Door flange		D F	●			
CE marking			Yes			
Overcurrent trip mechanism			Thermal-magnetic			
Colour of cover			Grey Blue			
Trip button (Colour)			Yes (Red)			
Suitability for isolation			Yes			
Reverse connection			Yes			

Notes:

◉ : Standard. This configuration used unless otherwise specified.
○ : Optional standard. Specify when ordering. ● : "yes" or "available". — : "no" or "not available".
① : DC is a special specification. When ordering, please specify DC.
⑪ : Please order the DIN rail adapter separately. See page 6-152. ㉗ : Applicable to only 2 poles breakers.
㊶ : A safety lock function is provided. ㊸ : For the extension bars, please place the order separately in parts.
㊼ : See page 7-173 for the outline dimensions.

Time/Current characteristic curves

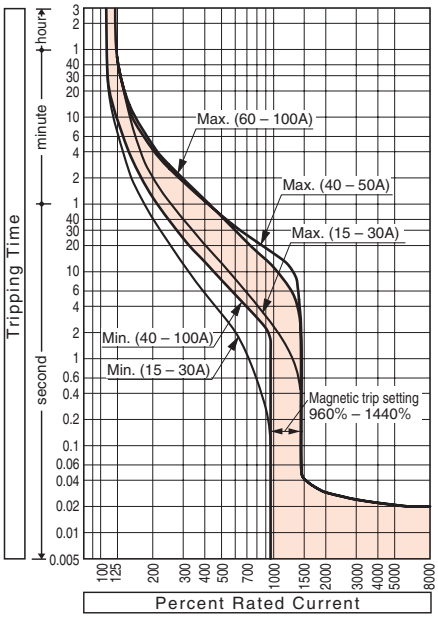

Ambient compensating curves

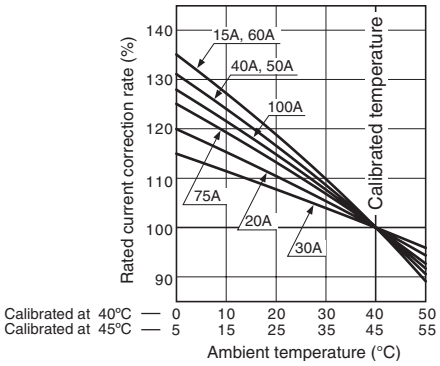

Combinations of Internally Mounted Accessories (Optional)

Poles	AX (Auxiliary switch)	AL (Alarm switch)	SH (Shunt trip)	UV (Under voltage trip)	AX–AL	AX–SH	AX–UV	AL–SH	AL–UV	AX–AL–SH	AX–AL–UV
2											
3·4											

Toggle — Left pole / Right pole

NOTE: 2-pole type breaker may incorporate only one combination of AX (max.2C), AL, SH, UV, AX (max.2C)–AL into the right pole.

Outline dimensions (mm) S100-GF

Front-connected

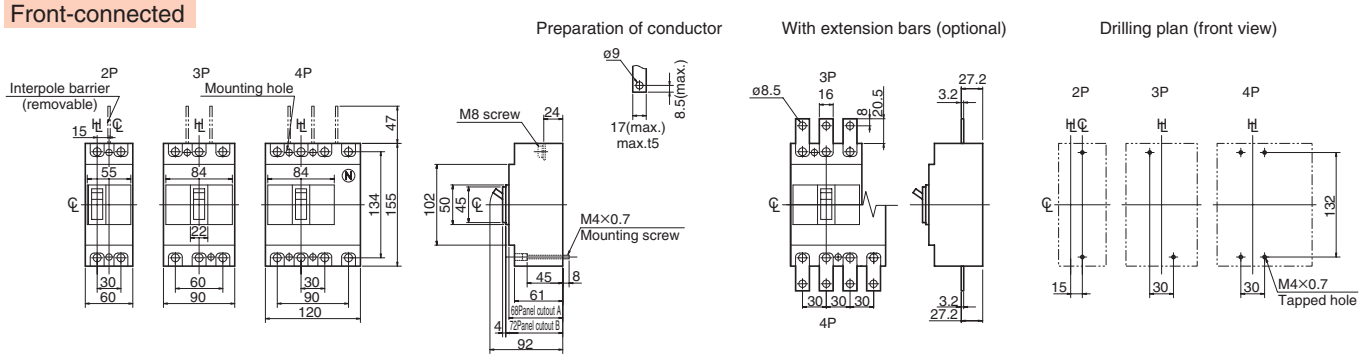

Rear-connected

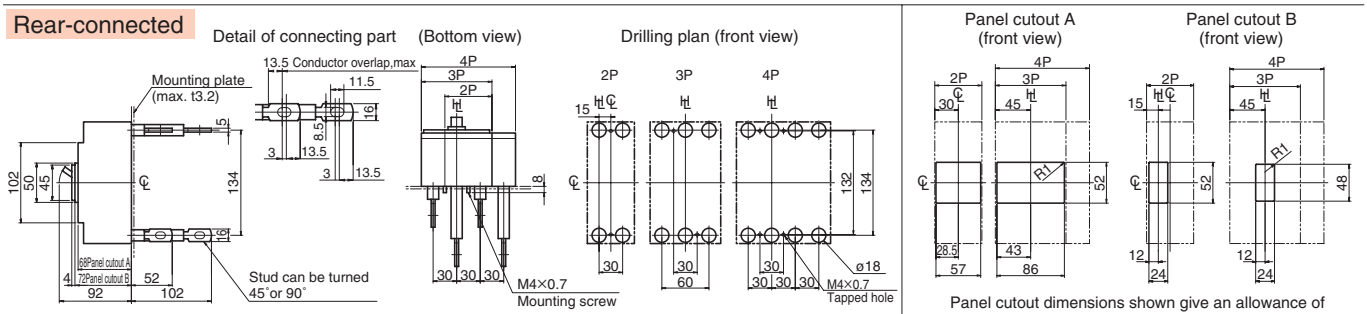

Note: Studs are factory installed in horizontal direction both on the line and load sides.

Panel cutout dimensions shown give an allowance of 1.0mm around the handle escutcheon.

Plug-in (Standard)

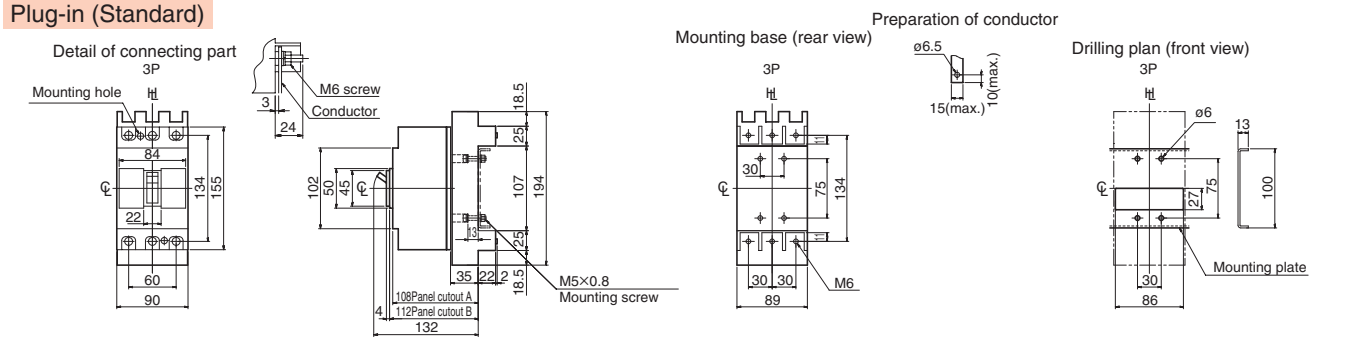

Plug-in (High-performance)

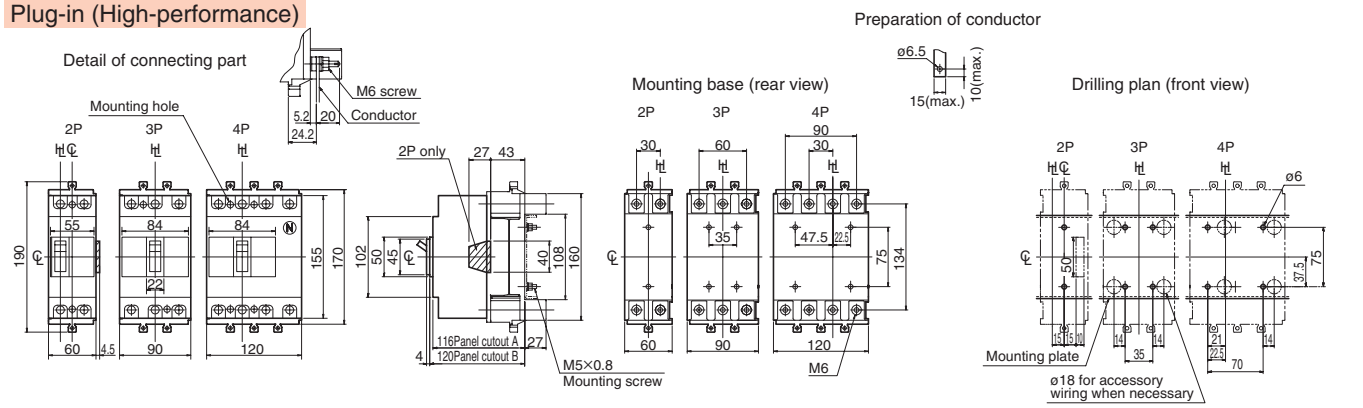

Flush-mounted

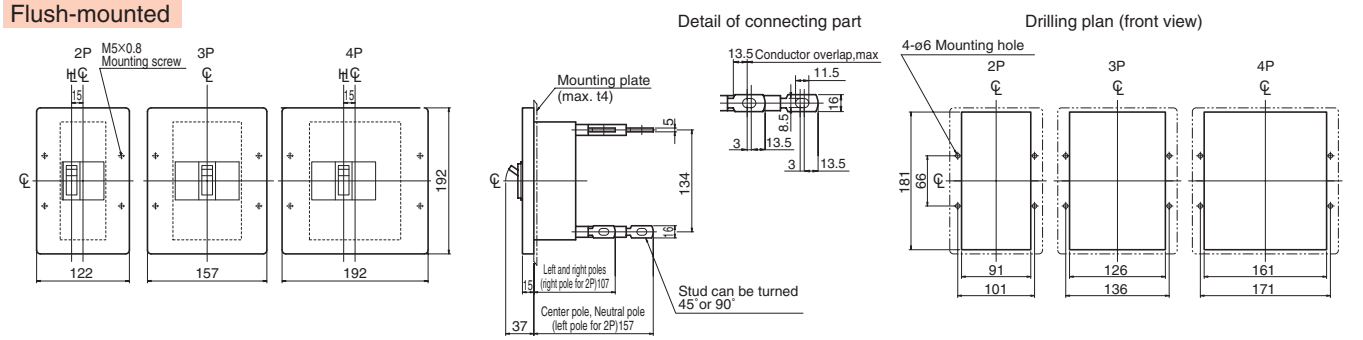

Note: Studs are factory installed in horizontal direction both on the line and load sides.

7 Characteristics and Outline Dimensions TemBreak PRO

Moulded Case Circuit Breakers

S125-GF

Ratings and Specifications

Frame size (A)			125			
Type			S125-GF			
Number of poles			2	3	4	
■ Ratings						
Rated current, A			125			
Calibrated at 40°C						
45°C						
Rated insulation voltage〔U_i〕 V			690			
Rated impulse withstand voltage〔U_{imp}〕 kV			8			
Rated short time withstand current 〔I_{cw}〕 kA			—			
Utilization Category			A			
■ Rated breaking capacity, kA						
JIS C 8201-2-1 Ann.1 Ann.2	AC	690V	6/6			
IEC 60947-2		500V	25/22			
I_{cu}/I_{cs}(sym)		440V	50/25			
		415V	65/33			
		380V	65/33			
		240V	85/85			
	① DC	250V	40/40 ㉗			
		125V	40/40 ㉗			
NK	AC	690V	6/6			
I_{cu}/I_{cs}(sym)		450V	50/25			
		240V	85/85			
	① DC	250V	40/40 ㉗			
Weight (◉ marked standard type) kg			0.7	1.1	1.4	
■ Connections and Mountings						
Front-connected (FC)	Terminal screws		◉			
	With extension bars		○ ㊸			
Rear-connected (RC)	Flat bar studs		○			
Plug-in (PM) For switchboards	High-performance (PMB)		○ ㊶			
	Standard (PMC)		—	○	—	
For distribution boards (PMD) ㊼			—			
Flush-mounted (FP)	With flat bar studs		○			
Draw-out type (DR)			—			
TemPlug70 (PG)			○		—	
DIN rail mount			—	○ ⑪		
■ Accessories (optional)		Symbol				
Externally mounted: Motor operator		M C	—	●		
External operating handle	Breaker-mounted	H B	—	●		
	Door-mounted (variable depth)	H P	—	●		
Toggle extension		H A	—			
Mechanical interlock	Slide type	M S	—	●		
	Rear-connected type	M B	—			
	Link type	M L	—	●		
	Wire type	MW	—	●		
Toggle holder		H H	●			
Toggle lock		H L	●			
Terminal cover	For front-connected	C F	●			
	For rear-connected and plug-in	C R	●			
Terminal block for lead		T F	●			
Door flange		D F	●			
CE marking			Yes			
Overcurrent trip mechanism			Thermal-magnetic			
Colour of cover			Grey Blue			
Trip button (Colour)			Yes (Red)			
Suitability for isolation			Yes			
Reverse connection			Yes			

Notes:

◉ : Standard. This configuration used unless otherwise specified.
○ : Optional standard. Specify when ordering. ● : "yes" or "available". — : "no" or "not available".
① : DC is a special specification. When ordering, please specify DC.
⑪ : Please order the DIN rail adapter separately. See page 6-152. ㉗ : Applicable to only 2 poles breakers.
㊶ : A safety lock function is provided. ㊸ : For the extension bars, please place the order separately in parts.
㊼ : See page 7-173 for the outline dimensions.

Time/Current characteristic curves

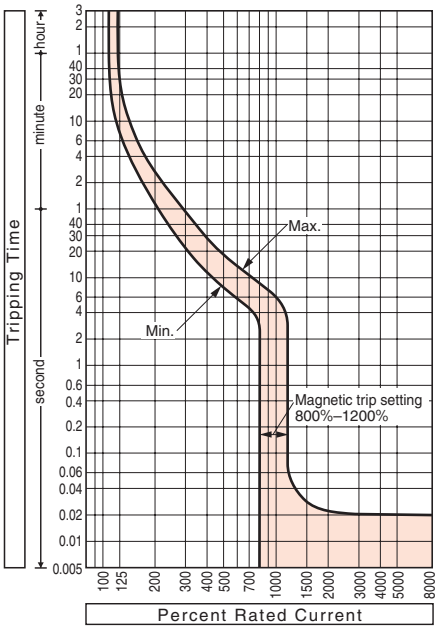

Ambient compensating curves

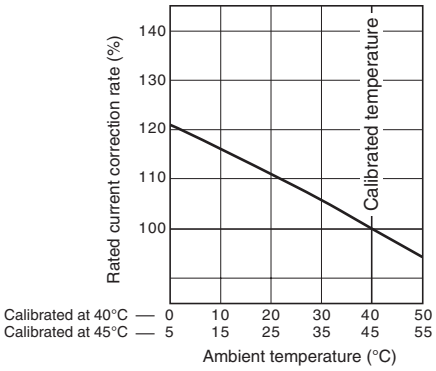

Combinations of Internally Mounted Accessories (Optional)

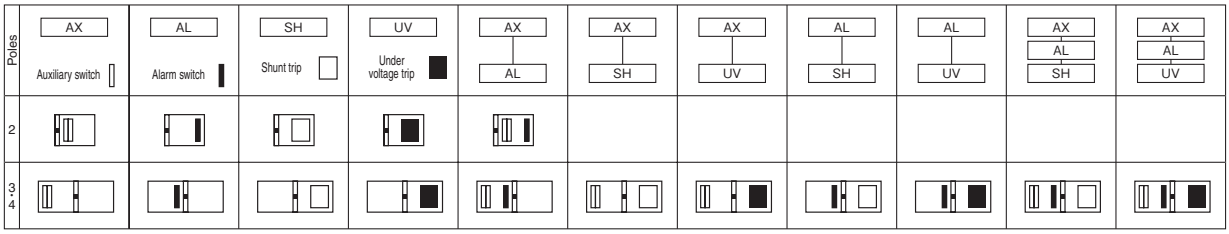

NOTE: 2-pole type breaker may incorporate only one combination of AX (max.2C), AL, SH, UV, AX (max.2C)—AL into the right pole.

Outline dimensions (mm) S125-GF

Front-connected

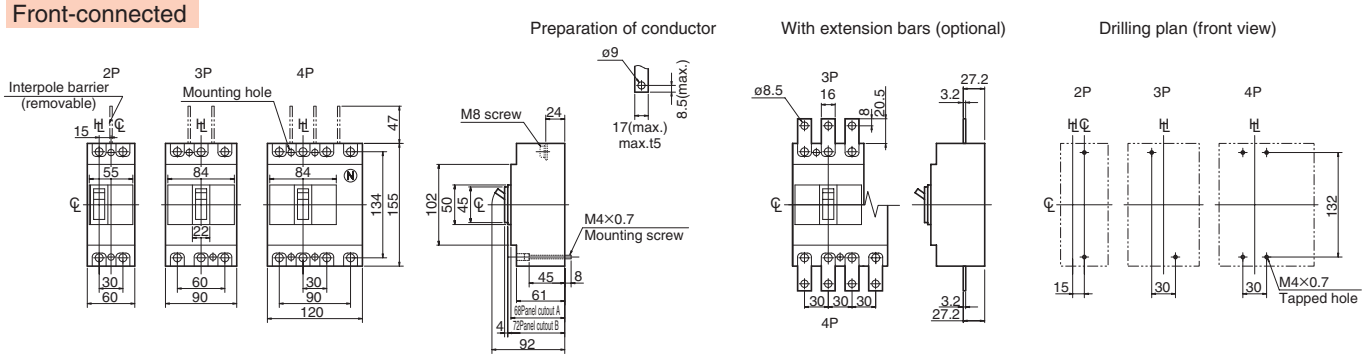

Rear-connected

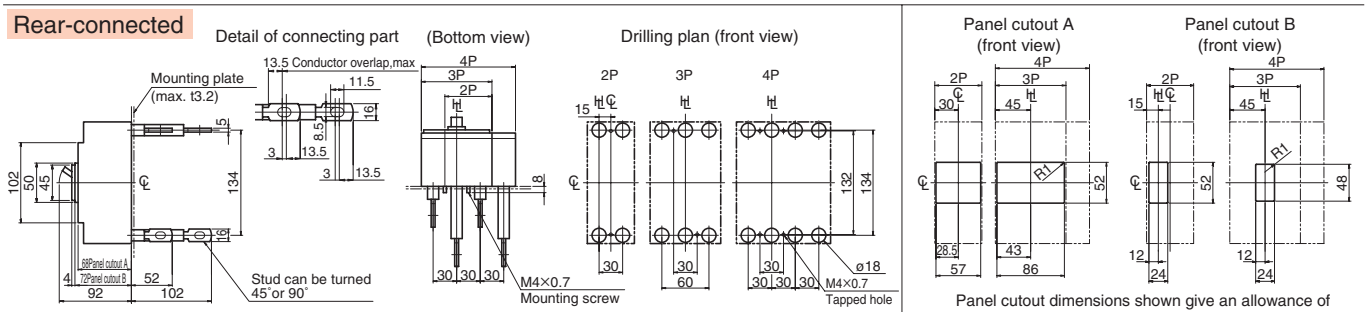

Note: Studs are factory installed in horizontal direction both on the line and load sides.

Panel cutout dimensions shown give an allowance of 1.0mm around the handle escutcheon.

Plug-in (Standard)

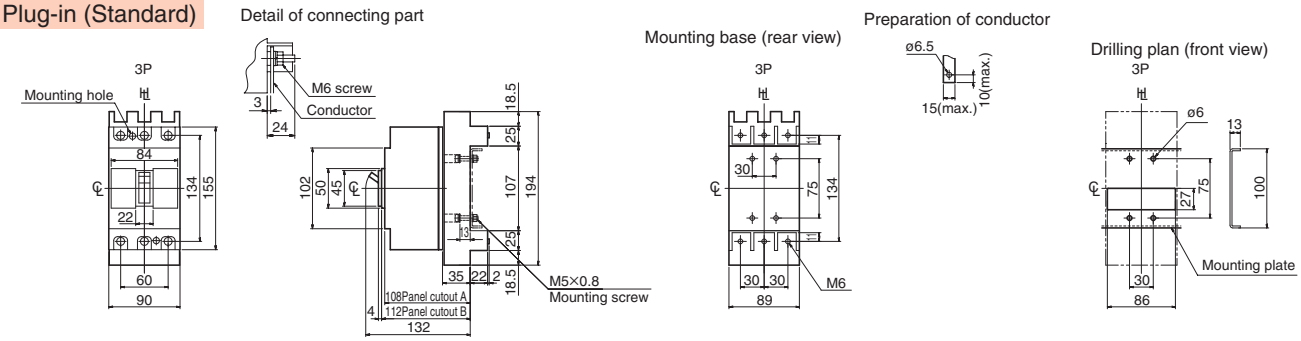

Plug-in (High-performance)

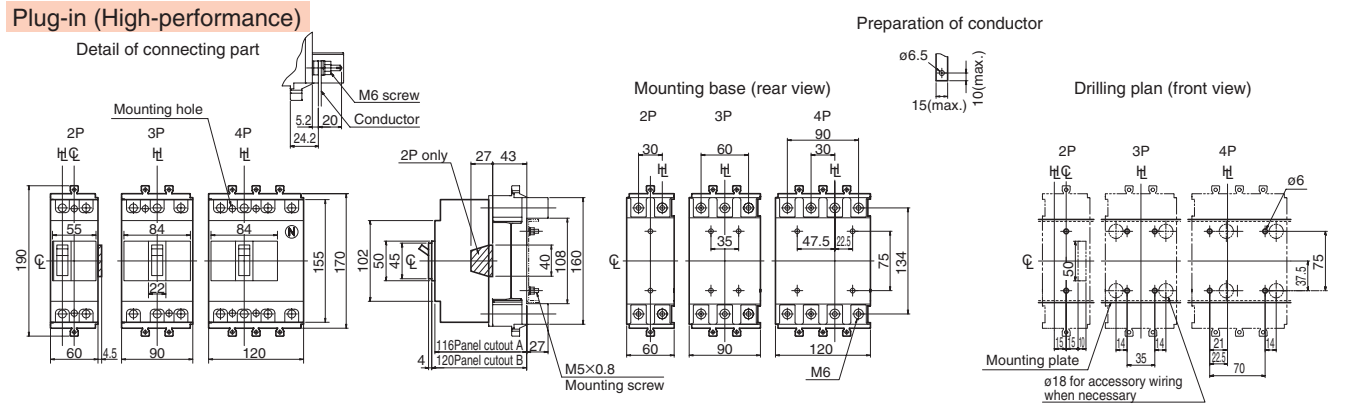

Flush-mounted

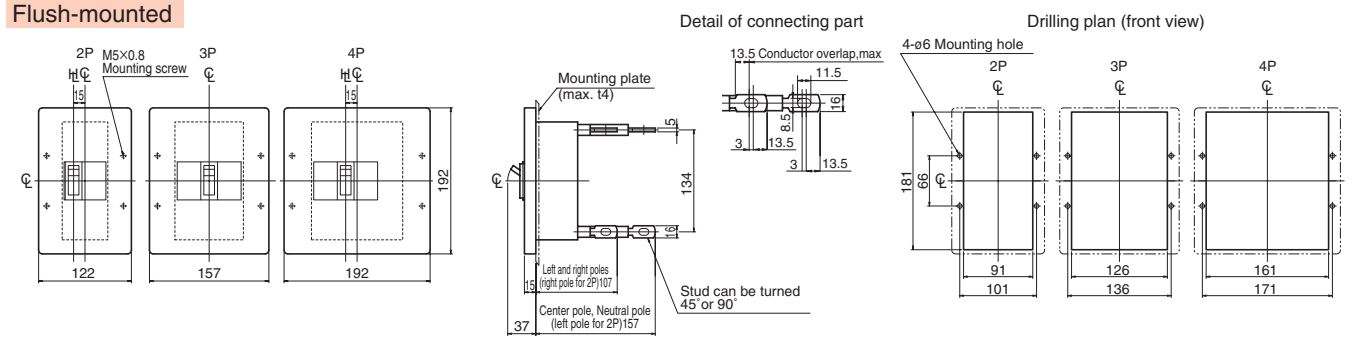

Note: Studs are factory installed in horizontal direction both on the line and line sides.

7 Characteristics and Outline Dimensions

TemBreak PRO

Moulded Case Circuit Breakers

H100-NF, L100-NF

Ratings and Specifications

Frame size (A)			100		100			
Type			H100-NF		L100-NF			
Number of poles			3	4	3	4		
■ Ratings								
Rated current, A			15	50	15	50		
Calibrated at 40°C			20	60	20	60		
45°C			30	75	30	75		
			40	100	40	100		
Rated insulation voltage〔U_i〕 V			690		690			
Rated impulse withstand voltage〔U_{imp}〕 kV			8		8			
Rated short time withstand current 〔I_{cw}〕 kA			—		—			
Utilization Category			A		A			
■ Rated breaking capacity, kA								
JIS C 8201-2-1 Ann.1 Ann.2	AC	690V	20/15		25/20			
IEC 60947-2		500V	45/45		65/65			
I_{cu}/I_{cs}(sym)		440V	120/80		180/135			
		415V	125/85		200/150			
		380V	125/85		200/150			
		240V	150/150		200/150			
	① DC	250V	40/40		40/40			
		125V	40/40		40/40			
NK	AC	690V	20/15		25/20			
I_{cu}/I_{cs}(sym)		450V	120/80		180/135			
		240V	150/150		200/150 ㉛			
	① DC	250V	—		—			
Weight (◉ marked standard type) kg			2.4	3.2	2.4	3.2		
■ Connections and Mountings								
Front-connected (FC)	Terminal screws		◉		◉			
	With extension bars		○ ㊸		○ ㊸			
Rear-connected (RC)	Flat bar studs		○		○			
Plug-in (PM) For switchboards	High-performance (PMB)		○ ㊶		○ ㊶			
	Standard (PMC)		○	—	○	—		
For distribution boards (PMD)			—		—			
Flush-mounted (FP)	With flat bar studs		○		○			
Draw-out type (DR)			—		—			
TemPlug70 (PG)			▲ ㊶	—	—			
DIN rail mount			—		—			
■ Accessories (optional)		Symbol						
Externally mounted: Motor operator		M C	●		●			
External operating handle	Breaker-mounted	H B	●		●			
	Door-mounted (variable depth)	H P	●		●			
Toggle extension		H A	—		—			
Mechanical interlock	Slide type	M S	●		●			
	Rear-connected type	M B	—		—			
	Link type	M L	●		●			
	Wire type	MW	●		●			
Toggle holder		H H	●		●			
Toggle lock		H L	●		●			
Terminal cover	For front-connected	C F	●		●			
	For rear-connected and plug-in	C R	●		●			
Terminal block for lead		T F	●		●			
Door flange		D F	●		●			
CE marking			Yes		Yes			
Overcurrent trip mechanism			Thermal-magnetic		Thermal-magnetic			
Colour of cover			Grey Blue		Grey Blue			
Trip button (Colour)			Yes (Red)		Yes (Red)			
Suitability for isolation			Yes		Yes			
Reverse connection			Yes ㉒		Yes ㉒			

Notes:

◉ : Standard. This configuration used unless otherwise specified. ○ : Optional standard. Specify when ordering.
▲ : Semi-standard. ● : "yes" or "available". — : "no" or "not available".
① : DC is a special specification. When ordering, please specify DC.
㉛ : Also applicable to 415V AC.
㊶ : A safety lock function is provided.
㊸ : For the extension bars, please place the order separately in parts.
㉒ : There are some limitations. See page 5-23 for details.
㊶ : They cannot be applied to circuits with a short circuit breaking current exceeding 85kA.

Time/Current characteristic curves

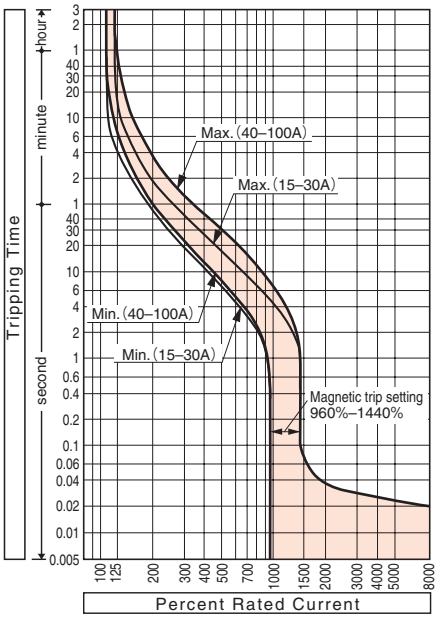

Ambient compensating curves

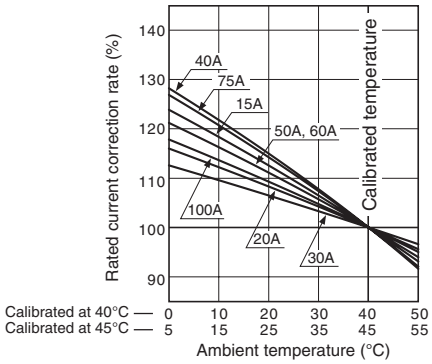

Combinations of Internally Mounted Accessories (Optional)

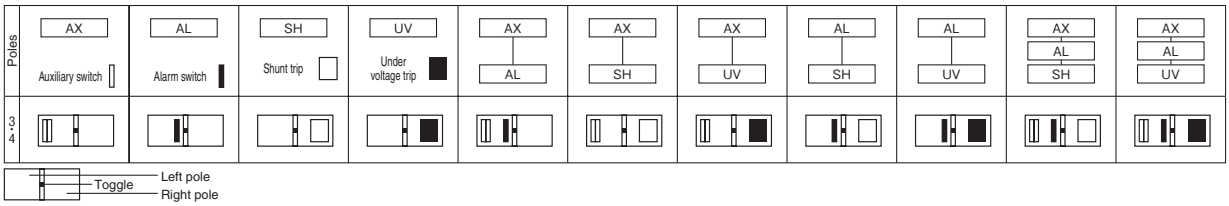

Outline dimensions (mm) — H100-NF, L100-NF

Front-connected

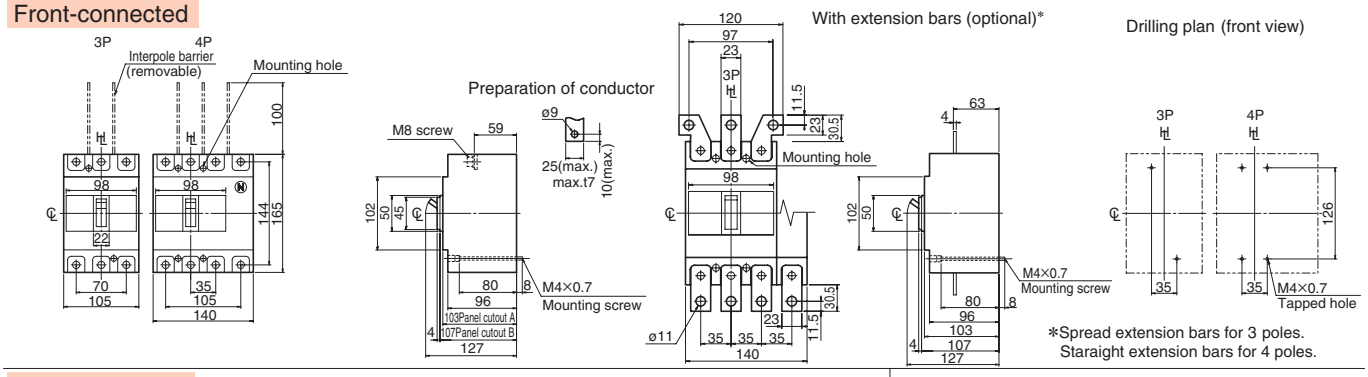

Rear-connected

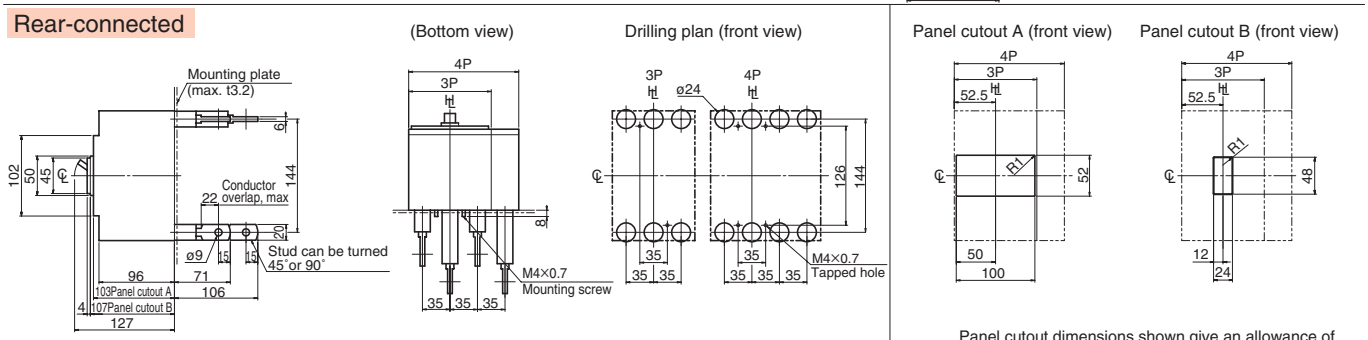

Note: Studs are factory installed in horizontal direction both on the line and load sides.

Panel cutout dimensions shown give an allowance of 1.0mm around the handle escutcheon.

Plug-in (Standard)

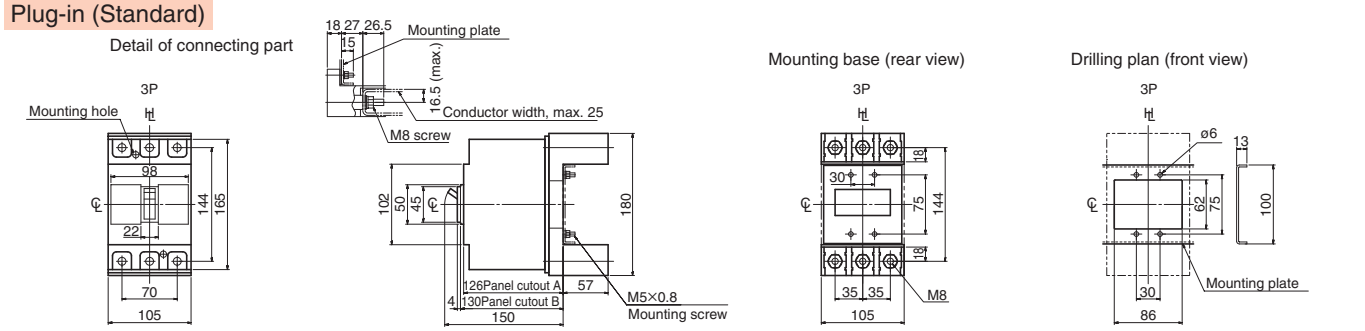

Plug-in (High-performance)

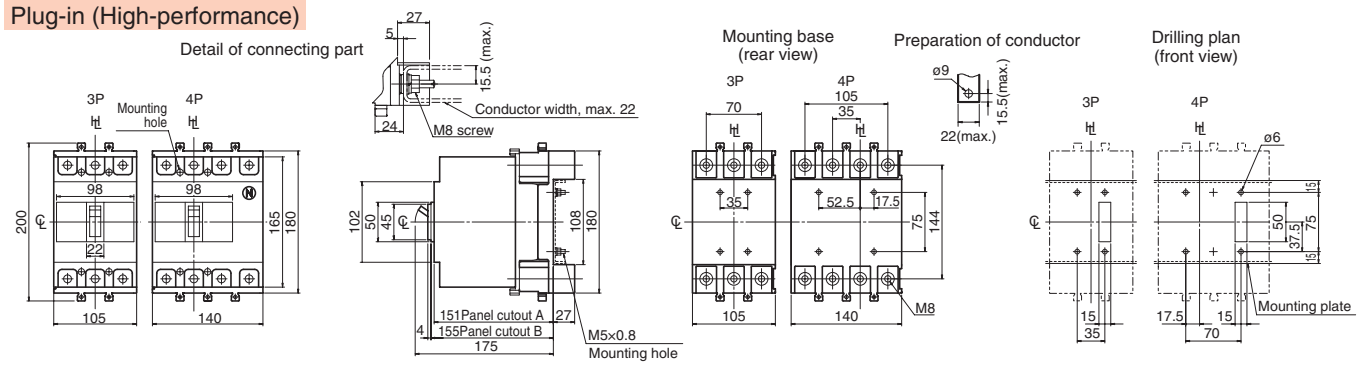

Flush-mounted

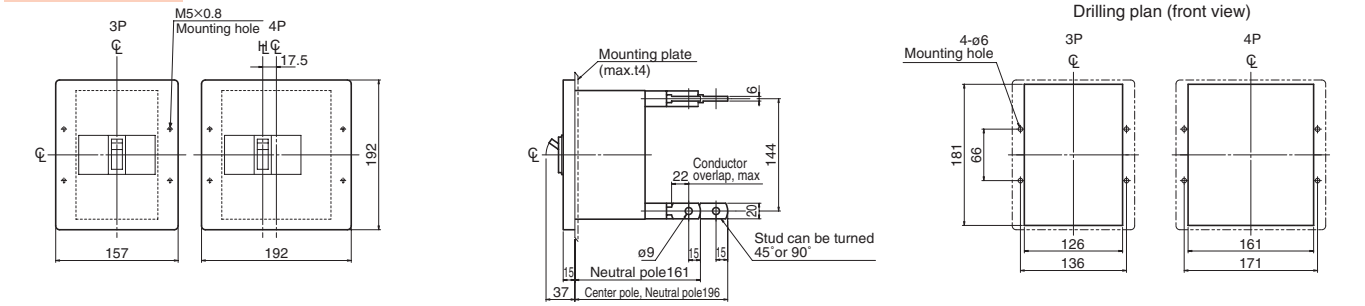

Note: Studs are factory installed in horizontal direction both on the line and load sides.

7 Characteristics and Outline Dimensions TemBreak PRO

Moulded Case Circuit Breakers

H125-NF, L125-NF

Ratings and Specifications

Frame size (A)			125		125	
Type			H125-NF		L125-NF	
Number of poles			3	4	3	4
■ Ratings						
Rated current, A			125		125	
Calibrated at 40°C						
45°C						
Rated insulation voltage〔U_i〕 V			690		690	
Rated impulse withstand voltage〔U_{imp}〕 kV			8		8	
Rated short time withstand current 〔I_{cw}〕 kA			—		—	
Utilization Category			A		A	
■ Rated breaking capacity, kA						
JIS C 8201-2-1 Ann.1 Ann.2	AC	690V	20/15		25/20	
IEC 60947-2		500V	45/45		65/65	
I_{cu}/I_{cs}(sym)		440V	120/80		180/135	
		415V	125/85		200/150	
		380V	125/85		200/150	
		240V	150/150		200/150	
	① DC	250V	40/40		40/40	
		125V	40/40		40/40	
NK	AC	690V	20/15		25/20	
I_{cu}/I_{cs}(sym)		450V	120/80		180/135	
		240V	150/150		200/150 ㉛	
	① DC	250V	—		—	
Weight (◉ marked standard type) kg			2.4	3.2	2.4	3.2
■ Connections and Mountings						
Front-connected (FC)	Terminal screws		◉		◉	
	With extension bars		○ ㊸		○ ㊸	
Rear-connected (RC)	Flat bar studs		○		○	
Plug-in (PM) For switchboards	High-performance (PMB)		○ ㊶		○ ㊶	
	Standard (PMC)		○	—	○	—
For distribution boards (PMD)			—		—	
Flush-mounted (FP)	With flat bar studs		○		○	
Draw-out type (DR)			—		—	
TemPlug70 (PG)			▲ ㊶	—	—	
DIN rail mount			—		—	
■ Accessories (optional)			Symbol			
Externally mounted: Motor operator			M C		●	
External operating handle	Breaker-mounted		H B		●	
	Door-mounted (variable depth)		H P		●	
Toggle extension			H A		—	
Mechanical interlock	Slide type		M S		●	
	Rear-connected type		M B		—	
	Link type		M L		●	
	Wire type		MW		●	
Toggle holder			H H		●	
Toggle lock			H L		●	
Terminal cover	For front-connected		C F		●	
	For rear-connected and plug-in		C R		●	
Terminal block for lead			T F		●	
Door flange			D F		●	
CE marking			Yes		Yes	
Overcurrent trip mechanism			Thermal-magnetic		Thermal-magnetic	
Colour of cover			Grey Blue		Grey Blue	
Trip button (Colour)			Yes (Red)		Yes (Red)	
Suitability for isolation			Yes		Yes	
Reverse connection			Yes ㉒		Yes ㉒	

Notes:

◉ : Standard. This configuration used unless otherwise specified. ○ : Optional standard. Specify when ordering.
▲ : Semi-standard. ● : "yes" or "available". — : "no" or "not available".
① : DC is a special specification. When ordering, please specify DC.
㉛ : Also applicable to 415V AC.
㊶ : A safety lock function is provided.
㊸ : For the extension bars, please place the order separately in parts.
㉒ : There are some limitations. See page 5-23 for details.
㊶ : They cannot be applied to circuits with a short circuit breaking current exceeding 85kA.

Time/Current characteristic curves

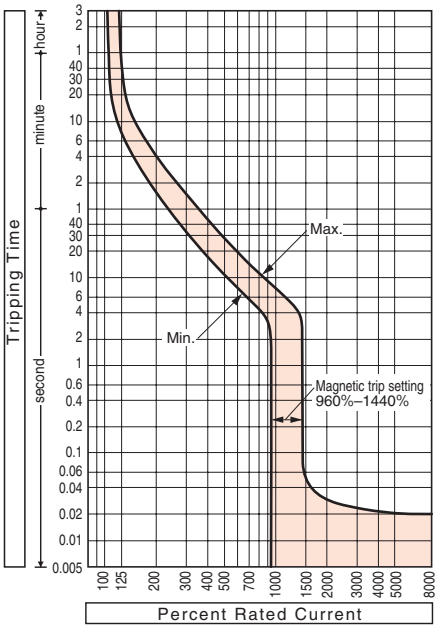

Ambient compensating curves

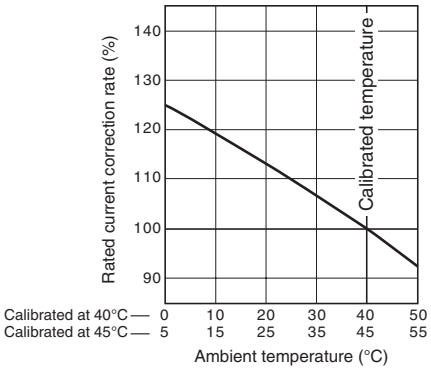

Combinations of Internally Mounted Accessories (Optional)

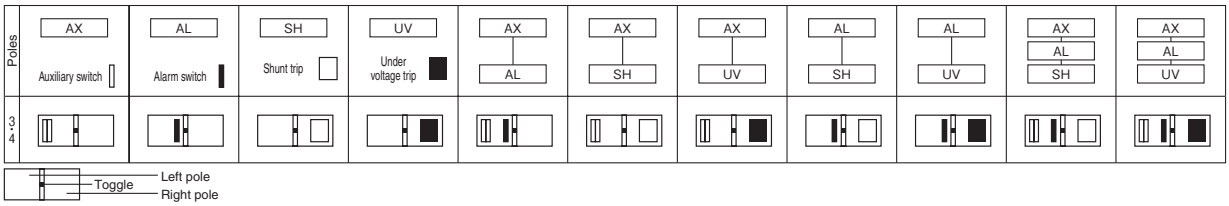

Outline dimensions (mm) — H125-NF, L125-NF

Front-connected

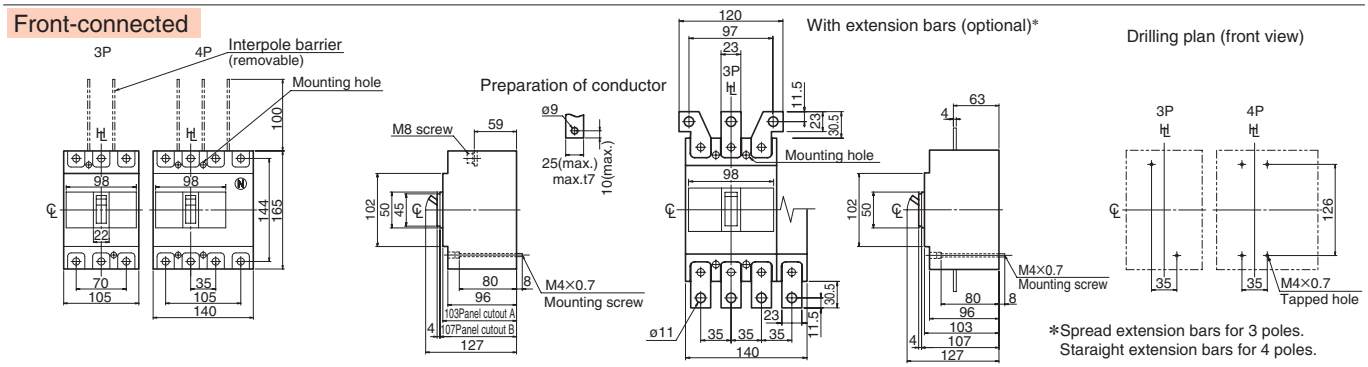

Rear-connected

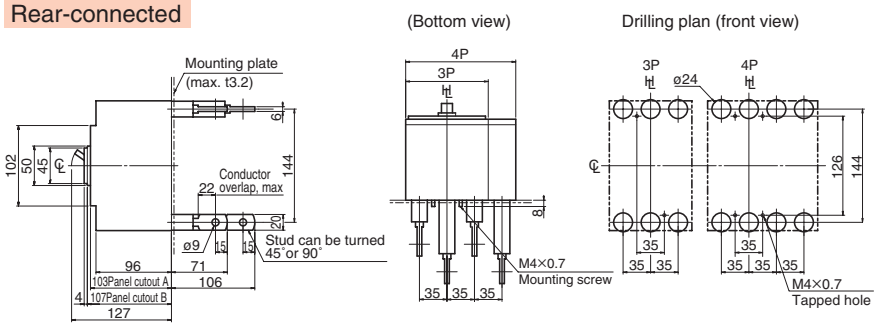

Note: Studs are factory installed in horizontal direction both on the line and load sides.

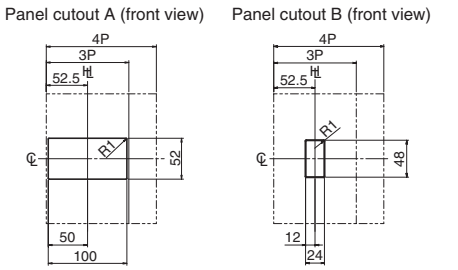

Panel cutout dimensions shown give an allowance of 1.0mm around the handle escutcheon.

Plug-in(Standard)

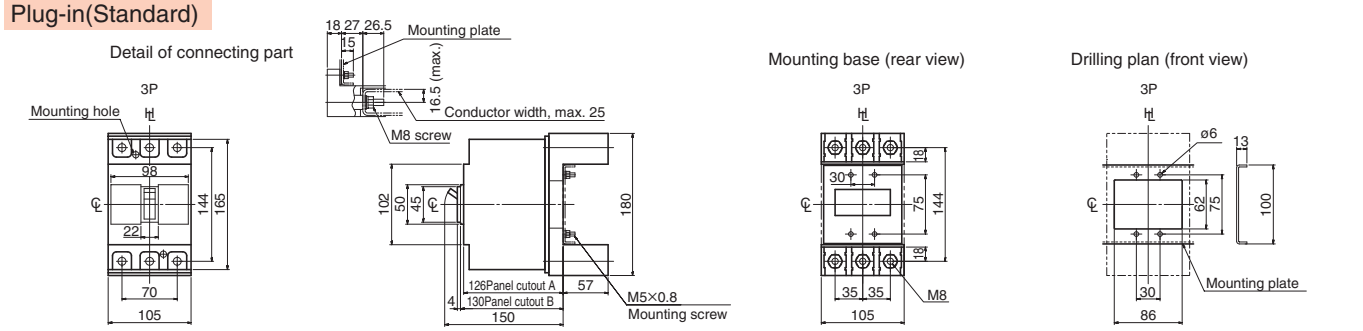

Plug-in (High-performance)

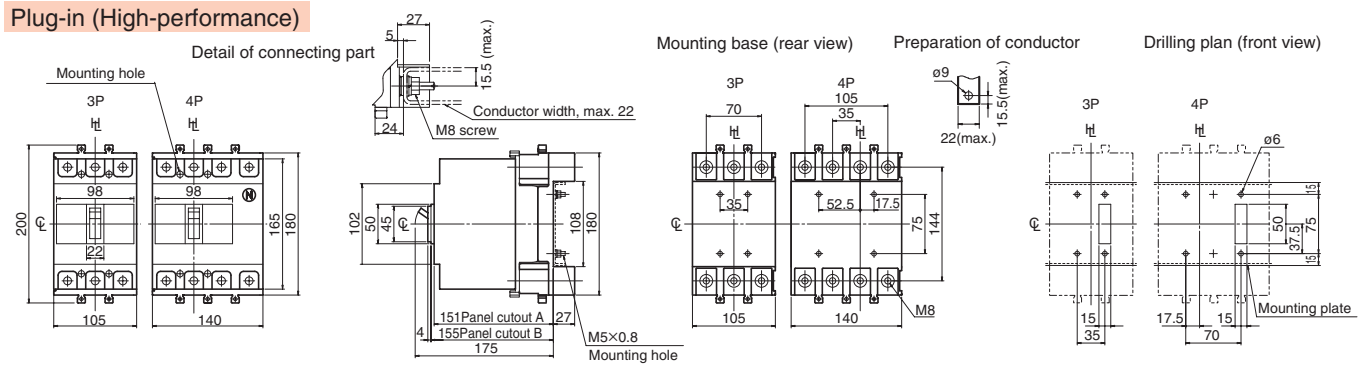

Flush-mounted

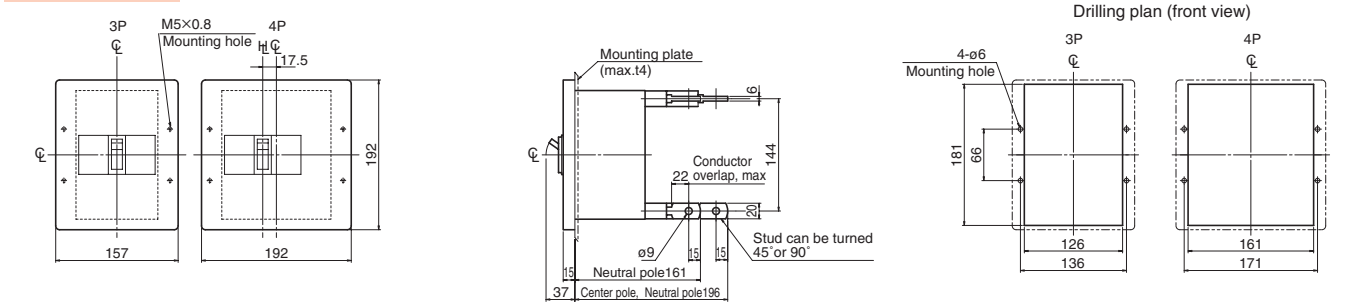

Note: Studs are factory installed in horizontal direction both on the line and load sides.

7 Characteristics and Outline Dimensions TemBreak PRO

Moulded Case Circuit Breakers

E250-SF

Ratings and Specifications

Frame size (A)			225		250			
Type			E250-SF					
Number of poles			2＊	3	2＊	3		
■ Ratings								
Rated current, A			125		250			
Calibrated at 40°C			150					
45°C			175					
			200					
＊ 2 poles breakers use the terminals of both ends of 3 poles breakers.			225					
Rated insulation voltage〔U_i〕 V			690		690			
Rated impulse withstand voltage〔U_{imp}〕 kV			8		8			
Rated short time withstand current 〔I_{cw}〕 kA			—		—			
Utilization Category			A		A			
■ Rated breaking capacity, kA								
JIS C 8201-2-1 Ann.1 Ann.2	AC	690V	—		—			
IEC 60947-2		500V	10/7.5		10/7.5			
I_{cu}/I_{cs}(sym)		440V	15/12		15/12			
		415V	25/19		25/19			
		380V	25/19		25/19			
		240V	35/27		35/27			
	① DC	250V	15/12 ⑧⑨		15/12 ⑧⑨			
		125V	25/19 ⑧⑨		25/19 ⑧⑨			
NK	AC	690V	—		—			
I_{cu}/I_{cs}(sym)		450V	15/12		15/12			
		240V	35/27		35/27			
	① DC	250V	—		—			
Weight (◉ marked standard type) kg			1.5	1.5	1.5	1.5		
■ Connections and Mountings								
Front-connected (FC)	Terminal screws		◉		◉			
	With extension bars		○ ⑤③		○ ⑤③			
Rear-connected (RC)	Flat bar studs		○		○			
Plug-in (PM) For switchboards	High-performance (PMB)		—		—			
	Standard (PMC)		○		○			
For distribution boards (PMD)			—		—			
Flush-mounted (FP)	With flat bar studs		○		○			
Draw-out type (DR)			—		—			
TemPlug70 (PG)			—	○	—	○		
DIN rail mount			—		—			
■ Accessories (optional)		Symbol						
Externally mounted: Motor operator		M C	●		●			
External operating handle	Breaker-mounted	H B	●		●			
	Door-mounted (variable depth)	H P	●		●			
Toggle extension		H A	—		—			
Mechanical interlock	Slide type	M S	●		●			
	Rear-connected type	M B	—		—			
	Link type	M L	●		●			
	Wire type	M W	●		●			
Toggle holder		H H	●		●			
Toggle lock		H L	●		●			
Terminal cover	For front-connected	C F	●		●			
	For rear-connected and plug-in	C R	●		●			
Terminal block for lead		T F	●		●			
Door flange		D F	●		●			
CE marking			Yes		Yes			
Overcurrent trip mechanism			Thermal-magnetic		Thermal-magnetic			
Colour of cover			Grey Blue		Grey Blue			
Trip button (Colour)			Yes (Red)		Yes (Red)			
Suitability for isolation			Yes		Yes			
Reverse connection			Yes		Yes			

Notes:

◉ : Standard. This configuration used unless otherwise specified. ○ : Optional standard. Specify when ordering.
▲ : Semi-standard. ● : "yes" or "available". — : "no" or "not available".
① : DC is a special specification. When ordering, please specify DC.
⑤③ : For the extension bars, please place the order separately in parts.
⑧⑨ : DC is a 2-pole product that uses both ends of a 3-pole circuit breaker.

Time/Current characteristic curves

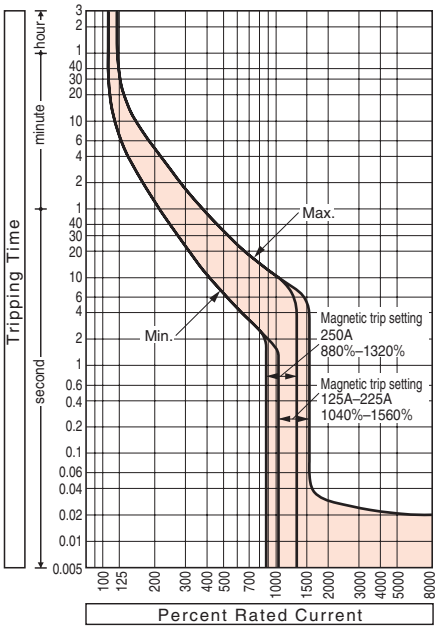

Ambient compensating curves

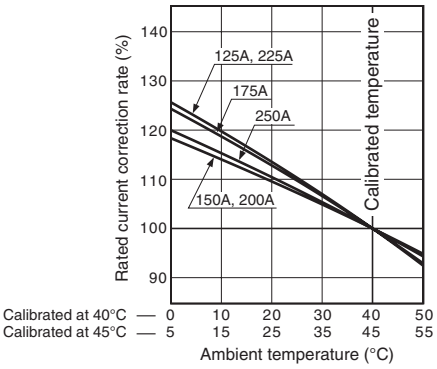

Combinations of Internally Mounted Accessories (Optional)

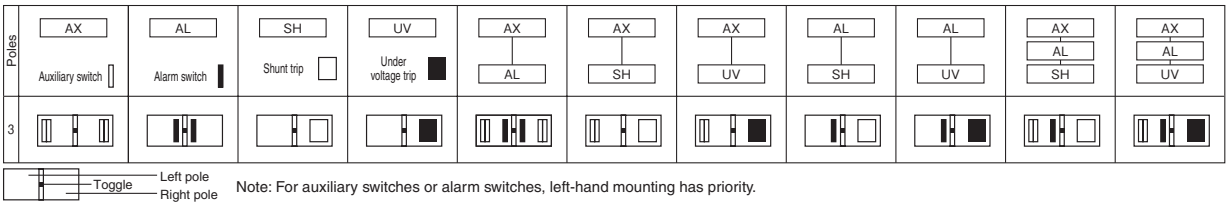

Note: For auxiliary switches or alarm switches, left-hand mounting has priority.

Outline dimensions (mm) E250-SF

Front-connected

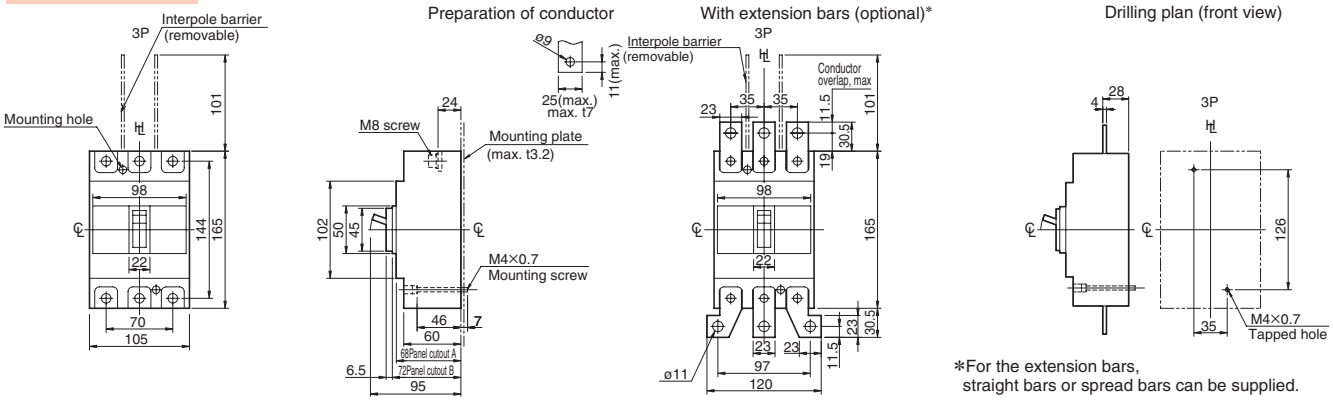

*For the extension bars, straight bars or spread bars can be supplied.

Rear-connected

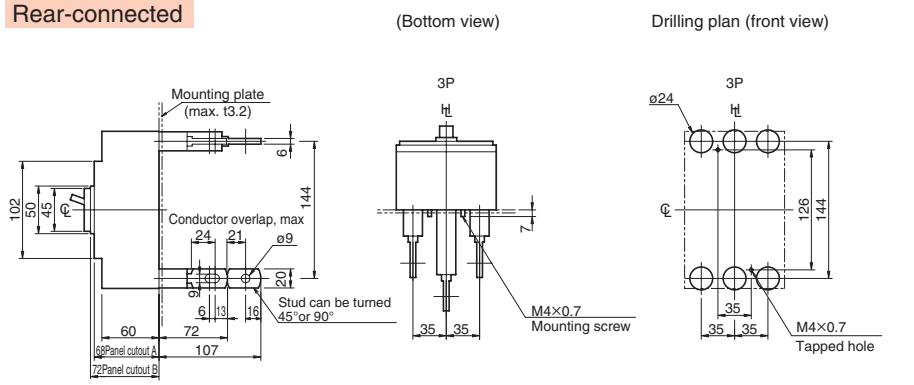

Note: Studs are factory installed in horizontal direction both on the line and load sides.

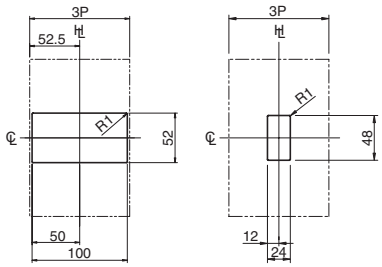

Panel cutout dimensions shown give an allowance of 1.0mm around the handle escutcheon.

Plug-in (Standard)

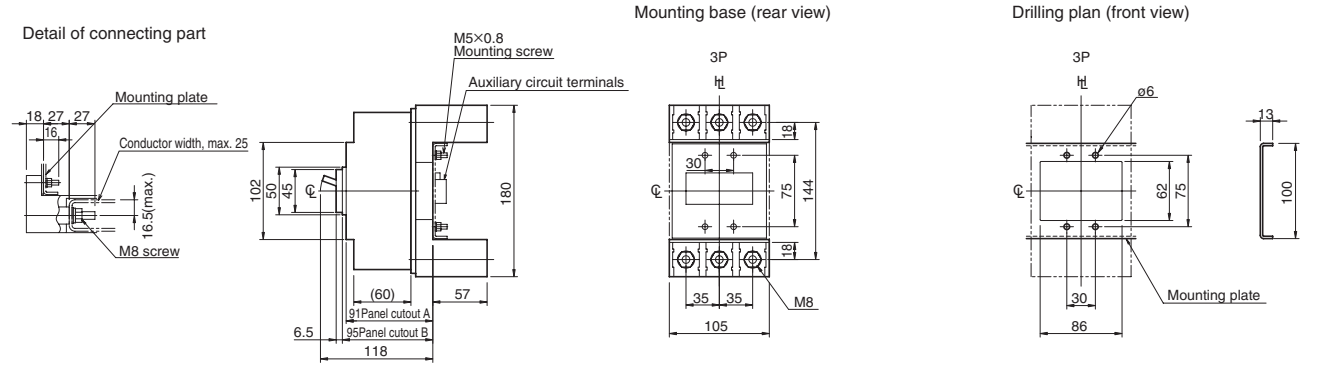

Flush-mounted

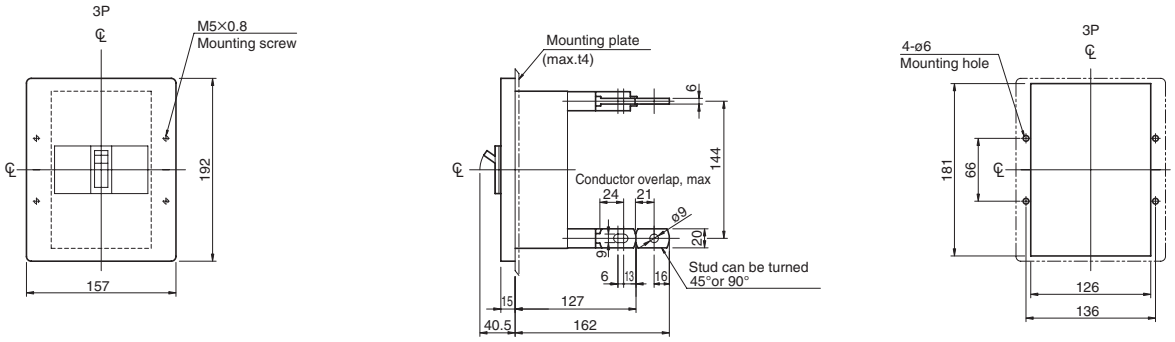

7 Characteristics and Outline Dimensions TemBreak PRO

Moulded Case Circuit Breakers

S250-SF

Ratings and Specifications

Frame size (A)			225			250				
Type			S250-SF							
Number of poles			2∗	3	4	2∗	3	4		
■ Ratings										
Rated current, A			125			250				
Calibrated at 40°C			150							
45°C			175							
			200							
∗ 2 poles breakers use the terminals of both ends of 3 poles breakers.			225							
Rated insulation voltage〔U_i〕 V			690			690				
Rated impulse withstand voltage〔U_{imp}〕 kV			8			8				
Rated short time withstand current 〔I_{cw}〕 kA			—			—				
Utilization Category			A			A				
■ Rated breaking capacity, kA										
JIS C 8201-2-1 Ann.1 Ann.2	AC	690V	4/4			4/4				
IEC 60947-2		500V	25/13			25/13				
I_{cu}/I_{cs}(sym)		440V	30/15			30/15				
		415V	40/20			40/20				
		380V	40/20			40/20				
		240V	85/43			85/43				
	① DC	250V	25/13 ⑧⑨			25/13 ⑧⑨				
		125V	40/20 ⑧⑨			40/20 ⑧⑨				
NK	AC	690V	—			—				
I_{cu}/I_{cs}(sym)		450V	30/15			30/15				
		240V	85/43			85/43				
	① DC	250V	25/13 ⑧⑨			25/13 ⑧⑨				
Weight (◉ marked standard type) kg			1.5	1.5	1.9	1.5	1.5	1.9		
■ Connections and Mountings										
Front-connected (FC)	Terminal screws		◉			◉				
	With extension bars		○ ⑤③			○ ⑤③				
Rear-connected (RC)	Flat bar studs		○			○				
Plug-in (PM) For switchboards	High-performance (PMB)		—			—				
	Standard (PMC)		○			○				
For distribution boards (PMD)			—			—				
Flush-mounted (FP)	With flat bar studs		○			○				
Draw-out type (DR)			—			—				
TemPlug70 (PG)			—	○	—	—	○	—		
DIN rail mount			—			—				
■ Accessories (optional)		Symbol								
Externally mounted: Motor operator		M C	●			●				
External operating handle	Breaker-mounted	H B	●			●				
	Door-mounted (variable depth)	H P	●			●				
Toggle extension		H A	—			—				
Mechanical interlock ⑨	Slide type	M S	●			●				
	Rear-connected type	M B	—			—				
	Link type	M L	●			●				
	Wire type	MW	●			●				
Toggle holder		H H	●			●				
Toggle lock		H L	●			●				
Terminal cover	For front-connected	C F	●			●				
	For rear-connected and plug-in	C R	●			●				
Terminal block for lead		T F	●			●				
Door flange		D F	●			●				
CE marking			Yes			Yes				
Overcurrent trip mechanism			Thermal-magnetic			Thermal-magnetic				
Colour of cover			Grey Blue			Grey Blue				
Trip button (Colour)			Yes (Red)			Yes (Red)				
Suitability for isolation			Yes			Yes				
Reverse connection			Yes			Yes				

Notes:

◉ : Standard. This configuration used unless otherwise specified. ○ : Optional standard. Specify when ordering.
▲ : Semi-standard. ● : "yes" or "available". — : "no" or "not available".
① : DC is a special specification. When ordering, please specify DC.
⑤③ : For the extension bars, please place the order separately in parts.
⑧⑨ : DC is a 2-pole product that uses both ends of a 3-pole circuit breaker.

Time/Current characteristic curves

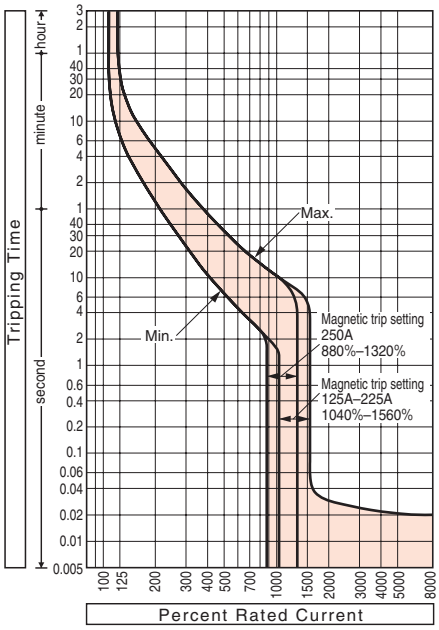

Ambient compensating curves

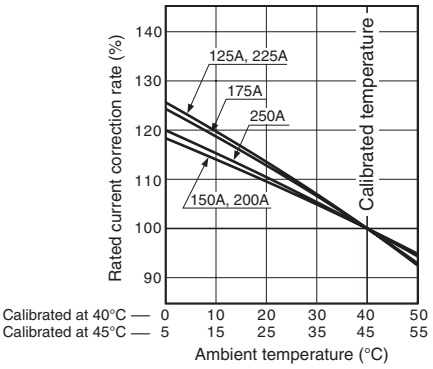

Combinations of Internally Mounted Accessories (Optional)

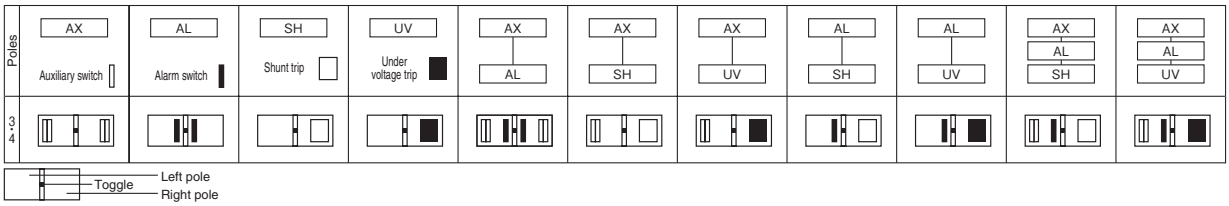

Outline dimensions (mm) S250-SF

Front-connected

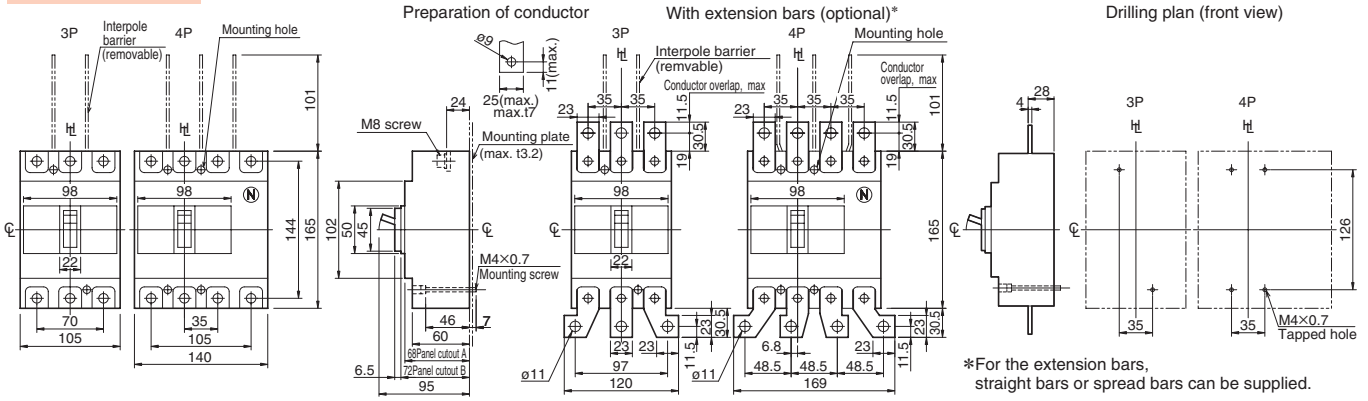

*For the extension bars, straight bars or spread bars can be supplied.

Rear-connected

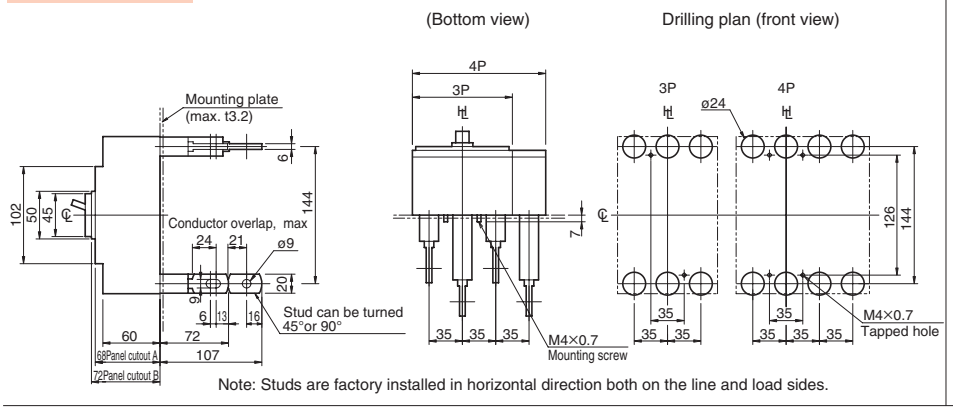

Note: Studs are factory installed in horizontal direction both on the line and load sides.

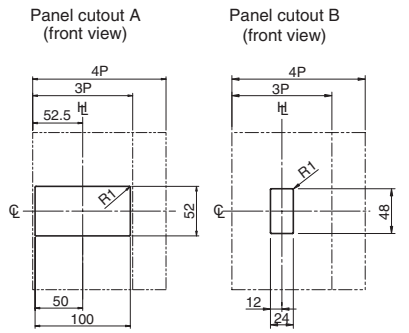

Panel cutout dimensions shown give an allowance of 1.0mm around the handle escutcheon.

Plug-in (Standard)

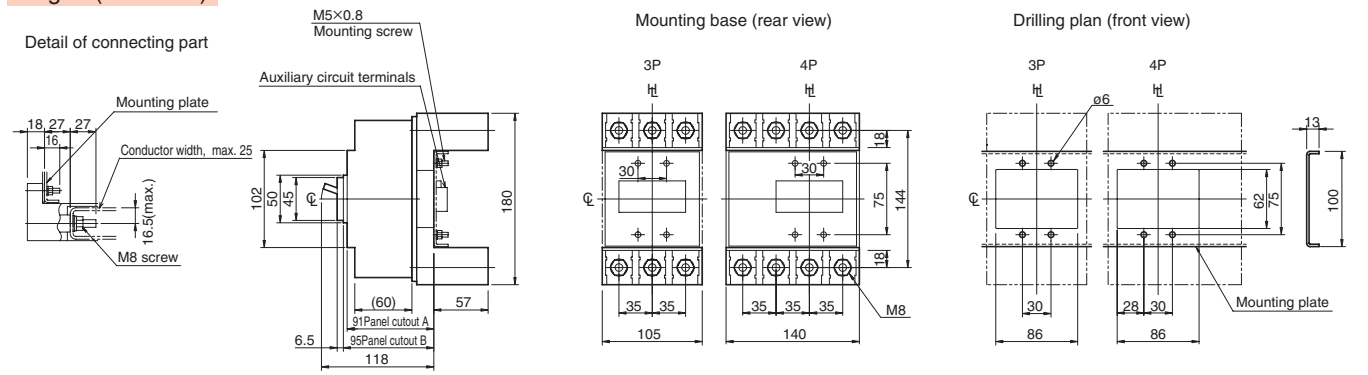

Flush-mounted

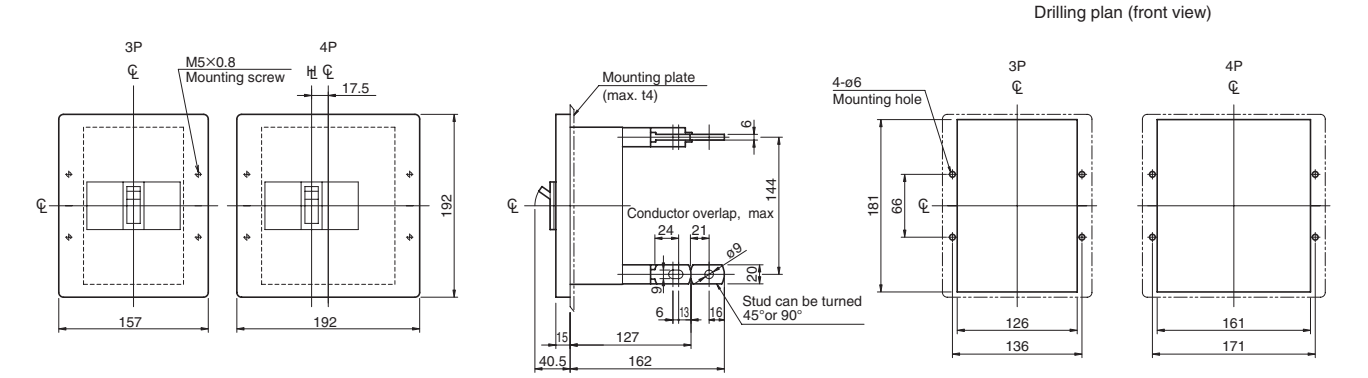

7 Characteristics and Outline Dimensions TemBreak PRO

Moulded Case Circuit Breakers

PS250-PF

Ratings and Specifications

Frame size (A)			225			250				
Type			PS250-PF							
Number of poles			2＊	3	4	2＊	3	4		
■ Ratings										
Rated current, A			125			250				
Calibrated at 40°C			150							
45°C			175							
			200							
＊ 2 poles breakers use the terminals of both ends of 3 poles breakers.			225							
Rated insulation voltage〔U_i〕 V			800			800				
Rated impulse withstand voltage〔U_{imp}〕 kV			8			8				
Rated short time withstand current 〔I_{cw}〕 kA			—			—				
Utilization Category			A			A				
■ Rated breaking capacity, kA										
JIS C 8201-2-1 Ann.1 Ann.2	AC	690V	6/6			6/6				
IEC 60947-2		500V	35/30			35/30				
I_{cu}/I_{cs}(sym)		440V	50/40			50/40				
		415V	70/50			70/50				
		380V	70/50			70/50				
		240V	85/85			85/85				
	① DC	250V	40/40 ⑰ ⑱			40/40 ⑰ ⑱				
		125V	40/40 ⑰ ⑱			40/40 ⑰ ⑱				
NK	AC	690V	6/6			6/6				
I_{cu}/I_{cs}(sym)		450V	50/35			50/35				
		240V	85/85			85/85				
	① DC	250V	40/40 ⑰ ⑱			40/40 ⑰ ⑱				
Weight (◉ marked standard type) kg			1.5	1.5	2.0	1.5	1.5	2.0		
■ Connections and Mountings										
Front-connected (FC)	Terminal screws		◉			◉				
	With extension bars		○ ㊸			○ ㊸				
Rear-connected (RC)	Flat bar studs		○			○				
Plug-in (PM) For switchboards	High-performance (PMB)		○ ㊿			○ ㊿				
	Standard (PMC)		○		—	○		—		
For distribution boards (PMD)			—			—				
Flush-mounted (FP)	With flat bar studs		○			○				
Draw-out type (DR)			▲			▲				
TemPlug70 (PG)			—	○	—	—	○	—		
DIN rail mount			—			—				
■ Accessories (optional)		Symbol								
Externally mounted: Motor operator		M C	●			●				
External operating handle	Breaker-mounted	H B	●			●				
	Door-mounted (variable depth)	H P	●			●				
Toggle extension		H A	—			—				
Mechanical interlock ⑨	Slide type	M S	●			●				
	Rear-connected type	M B	—			—				
	Link type	M L	●			●				
	Wire type	MW	●			●				
Toggle holder		H H	●			●				
Toggle lock		H L	●			●				
Terminal cover	For front-connected	C F	●			●				
	For rear-connected and plug-in	C R	●			●				
Terminal block for lead		T F	●			●				
Door flange		D F	●			●				
CE marking			Yes			Yes				
Overcurrent trip mechanism			Thermal-magnetic			Thermal-magnetic				
Colour of cover			Grey Blue			Grey Blue				
Trip button (Colour)			Yes (Red)			Yes (Red)				
Suitability for isolation			Yes			Yes				
Reverse connection			Yes			Yes				

Notes:

◉ : Standard. This configuration used unless otherwise specified. ○ : Optional standard. Specify when ordering.
▲ : Semi-standard. ● : "yes" or "available". — : "no" or "not available".
① : DC is a special specification. When ordering, please specify DC.
⑨ : Mechanical interlocks cannot be applied to draw-out type (DR).
⑰ : See page 4-7 for the instantaneous trip value when using with DC.
㊿ : A safety trip function is provided. ㊸ : For the extension bars, please place the order separately in parts.
⑱ : DC is a 2-pole product that uses both ends of a 3-pole circuit breaker.

Time/Current characteristic curves

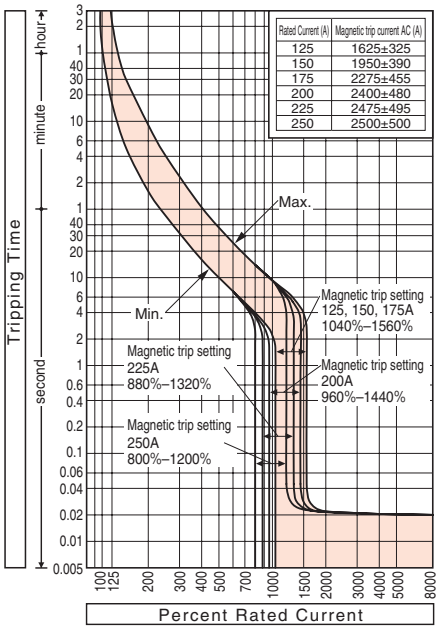

Rated Current (A)	Magnetic trip current AC (A)
125	1625±325
150	1950±390
175	2275±455
200	2400±480
225	2475±495
250	2500±500

Ambient compensating curves

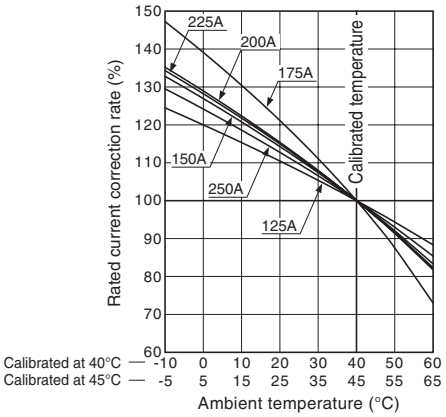

Combinations of Internally Mounted Accessories (Optional)

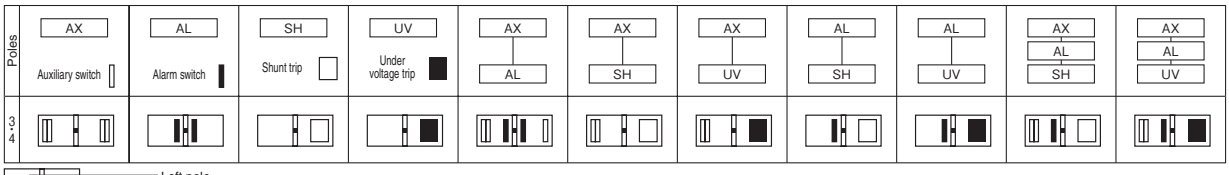

Note: For auxiliary switches or alarm switches, left-hand mounting has priority.

Outline dimensions (mm) PS250-PF

Front-connected

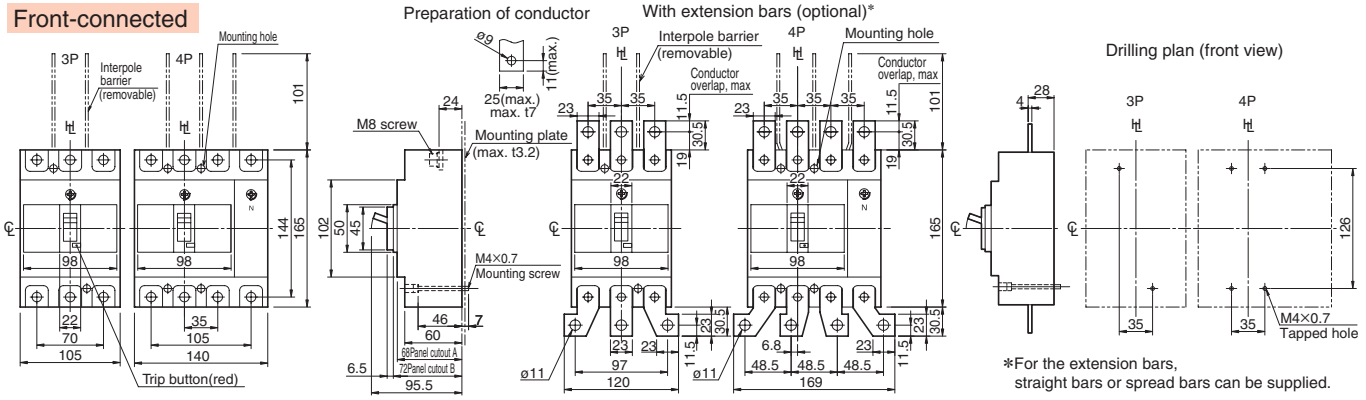

Rear-connected

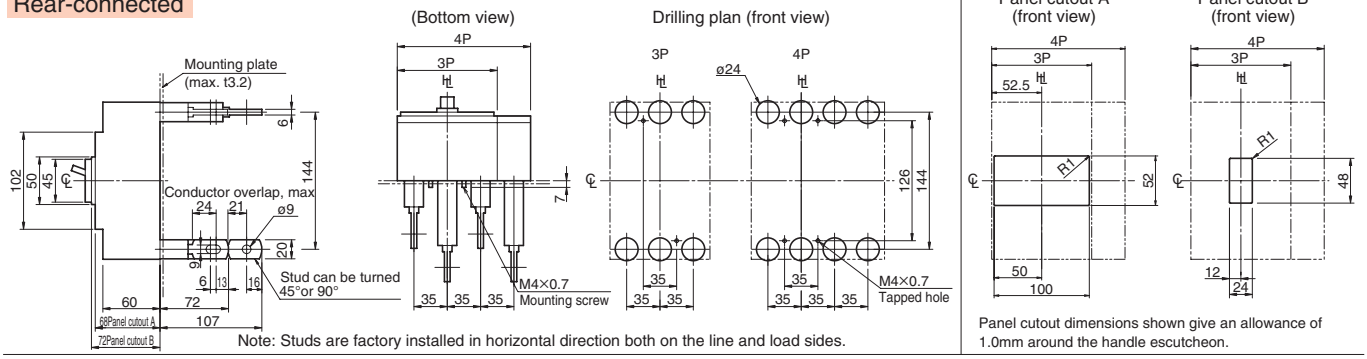

Note: Studs are factory installed in horizontal direction both on the line and load sides.

Plug-in (Standard)

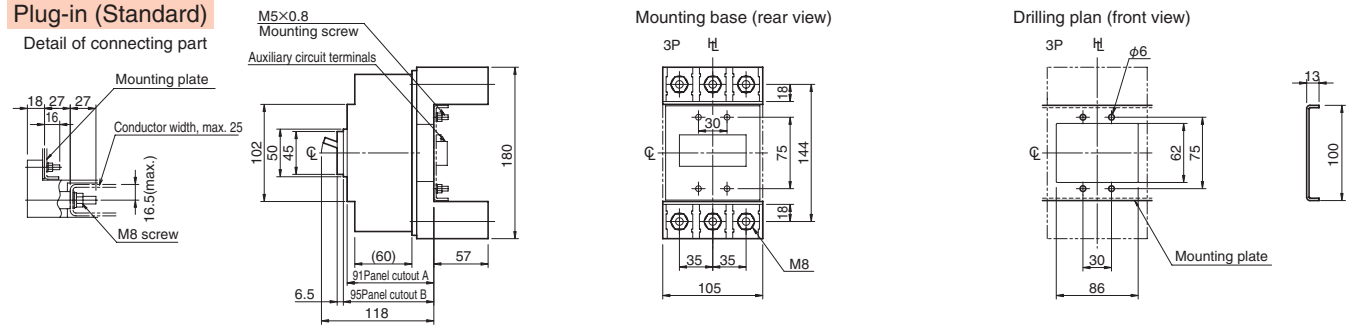

Plug-in (High-performance)

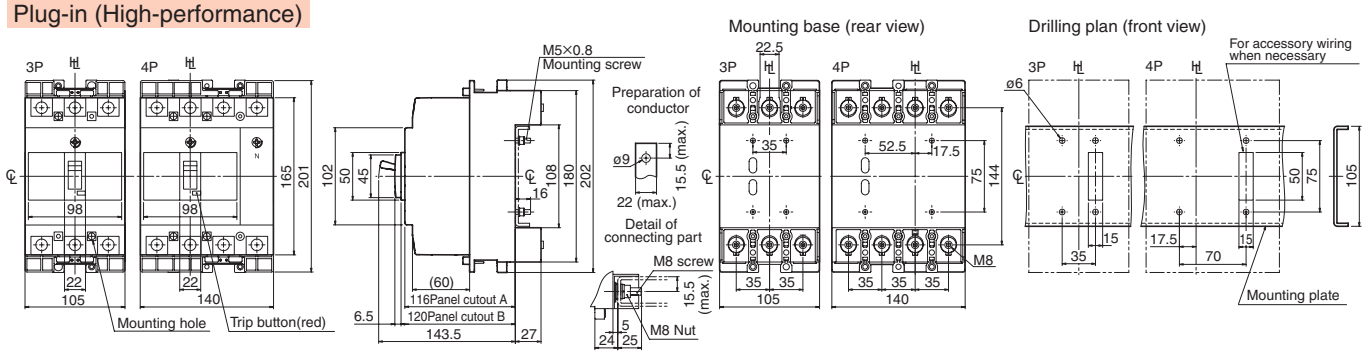

Flush-mounted

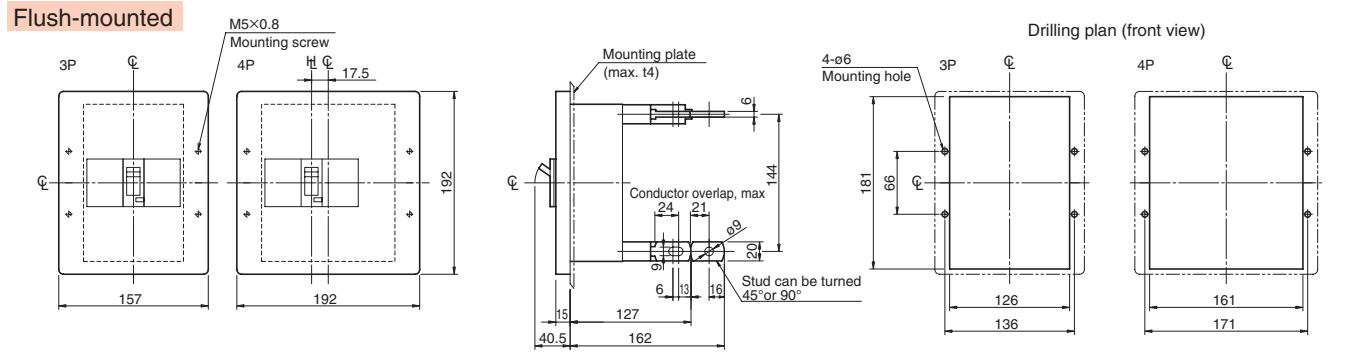

7 Characteristics and Outline Dimensions

TemBreak PRO

Moulded Case Circuit Breakers

PS250-NE, PS250-PE

Ratings and Specifications

Frame size (A)			250		250	
Type			PS250-NE		PS250-PE	
Number of poles			3	4	3	4
■ Ratings						
Rated current, A			Adjustable		Adjustable	
Calibrated at 40°C			I_n=250		I_n=250	
45°C			125	200	125	200
⑱			150	225	150	225
			175	250	175	250
Rated insulation voltage〔U_i〕 V			800		800	
Rated impulse withstand voltage〔U_{imp}〕 kV			8		8	
Rated short time withstand current 〔I_{cw}〕 kA			—		—	
Utilization Category			A		A	
■ Rated breaking capacity, kA						
JIS C 8201-2-1 Ann.1 Ann.2	AC	690V	6/6		6/6	
IEC 60947-2		500V	22/22		35/30	
I_{cu}/I_{cs}(sym)		440V	25/25		50/40	
		415V	36/36		70/50	
		380V	36/36		70/50	
		240V	50/50		85/85	
	DC	250V	—		—	
		125V	—		—	
NK	AC	690V	6/6		6/6	
I_{cu}/I_{cs}(sym)		450V	25/25		50/35	
		240V	50/50		85/85	
	DC	250V	—		—	
Weight (◉ marked standard type) kg			1.5	2.0	1.5	2.0
■ Connections and Mountings						
Front-connected (FC)	Terminal screws		◉		◉	
	With extension bars		○ ⑤③		○ ⑤③	
Rear-connected (RC)	Flat bar studs		○		○	
Plug-in (PM) For switchboards	High-performance (PMB)		○ ⑤⓪		○ ⑤⓪	
	Standard (PMC)		○	—	○	—
For distribution boards (PMD)			—		—	
Flush-mounted (FP)	With flat bar studs		○		○	
Draw-out type (DR)			▲		▲	
TemPlug70 (PG)			○	—	○	—
DIN rail mount			—		—	
■ Accessories (optional)		Symbol				
Motor operator		M C	●		●	
External operating handle	Breaker-mounted	H B	●		●	
	Door-mounted (variable depth)	H P	●		●	
Toggle extension		H A	—		—	
Mechanical interlock ⑨	Slide type	M S	●		●	
	Rear-connected type	M B	—		—	
	Link type	M L	●		●	
	Wire type	M W	●		●	
Toggle holder		H H	●		●	
Toggle lock		H L	●		●	
Terminal cover	For front-connected	C F	●		●	
	For rear-connected and plug-in	C R	●		●	
Terminal block for lead		T F	●		●	
Door flange		D F	●		●	
CE marking			Yes		Yes	
Overcurrent trip mechanism			Electronic		Electronic	
Colour of cover			Grey Blue		Grey Blue	
Trip button (Colour)			Yes (Red)		Yes (Red)	
Suitability for isolation			Yes		Yes	
Reverse connection			Yes		Yes	

Externally mounted

Notes:

◉ : Standard. This configuration used unless otherwise specified.
○ : Optional standard. Specify when ordering.
▲ : Semi-standard. ● : "yes" or "available". — : "no" or "not available".
⑨ : Mechanical interlocks cannot be applied to draw-out type (DR).
⑤⓪ : A safety trip function is provided.
⑤③ : For the extension bars, please place the order separately in parts.
⑱ : If the ambient temperature exceeds 45°C, reduce the operating current in accordance with 2 Environmental operating conditions of the chapter 8.

Time/Current characteristic curves

• Long time/Short time trip characteristics

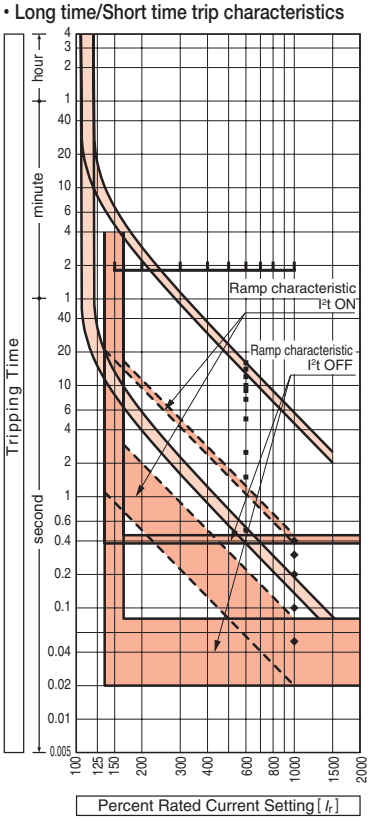

• Instantaneous trip characteristics

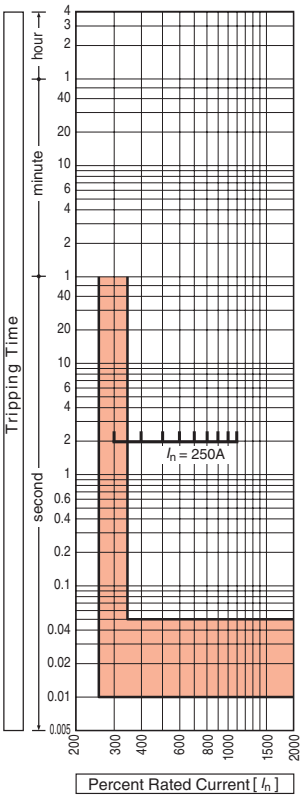

Note: See page 6-4 for Neutral protection, ground fault trip and preferential trip alarm characteristics.

Overcurrent tripping characteristics

TPOP OCR (LSIG) (I_n)=250A

Rated current settings (A) (I_r) = (I_r1)×(I_r2)	(I_r1) (A)=125, 150, 175, 200, 225, 250 adjustable
	(I_r2)=0.91, 0.92, 0.93, 0.94, 0.95, 0.96, 0.97, 0.98, 0.99, 1.00 adjustable
Long time-delay time settings (s) : (t_r)	0.5, 1.5, 2.5, 5, 7.5, 9, 10, 12, 14, 16 adjustable at (I_r)×600%
	Time-delay setting tolerance –20% –20ms or more +0% +30ms or less
Short time-delay pick-up current (A) : (I_{sd})	(I_r)×1.5, 2, 3, 4, 5, 6, 7, 8, 10 or OFF ①②
	Current setting tolerance within ±10%
Short time-delay time settings (ms) : (t_{sd})	50, 100, 200, 300, 400 adjustable
	Ramp characteristics I²t: ON or OFF However, definite time-delay characteristics with (I_r)×10 or more
	When (t_{sd})=50ms Time-delay setting tolerance –30ms or more +30ms or less When (t_{sd})=100ms to 400ms Time-delay setting tolerance –20ms or more +50ms or less
Instantaneous trip pick-up current (A) : (I_i)	(I_n)×3, 4, 5, 6, 7, 8, 9, 10, 11 adjustable
	Current setting tolerance within ±15%
Neutral protection pick-up current (A) : (I_N)	For 3P OFF fixed
	For 4P (I_r)×50%, 100% or OFF
Neutral protection time settings (s) : (t_N)	Operates with long time-delay time setting (t_r) and short time-delay time setting (t_{sd}) and also operates with instantaneous trip
Ground fault trip pick-up current (A) : (I_g)	3P for 3ø3W, 4P for 3ø4W (3P 3ø4W not supported) or OFF (I_n)×20% Current setting tolerance within ±10%
Ground fault trip time settings (ms) : (t_g)	200 Time-delay setting tolerance –20ms or more +50ms or less
Preferential trip alarm pick-up current (A) : (I_p)	(I_r)×80% Current setting tolerance within ±10%
Preferential trip alarm time settings (s) : (t_p)	(t_r)×50% Time-delay setting tolerance –20% –20ms or more +0% +30ms or less

Remarks:
1: If not otherwise specified, the product will be delivered with the underlined standard setting values.
2: The TPOT type OCR (LSI) only has long time-delay trip, short time-delay trip, instantaneous trip, and preferential trip alarm.

Notes:
①: When I_r=225A or more and t_r=16s is set, the device operates with Isd=I_r × 9 even if the max. Isd=I_r × 10 is set.
②: When I_{sd}=OFF is set, the long time-delay will become ramp characteristics last to 2s at Max 2,750A in the area of 2000A or more of conduction current. If long time-delay time setting is faster than the ramp characteristic time then the device operates with the long time-delay time setting.

Combinations of Internally Mounted Accessories (Optional)

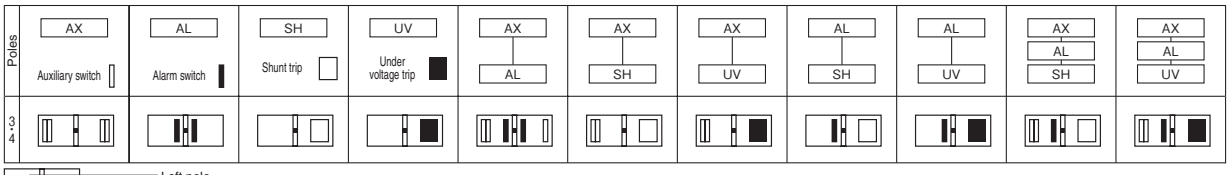

Note: For auxiliary switches or alarm switches, left-hand mounting has priority.

Outline dimensions (mm) — PS250-NE, PS250-PE

Front-connected

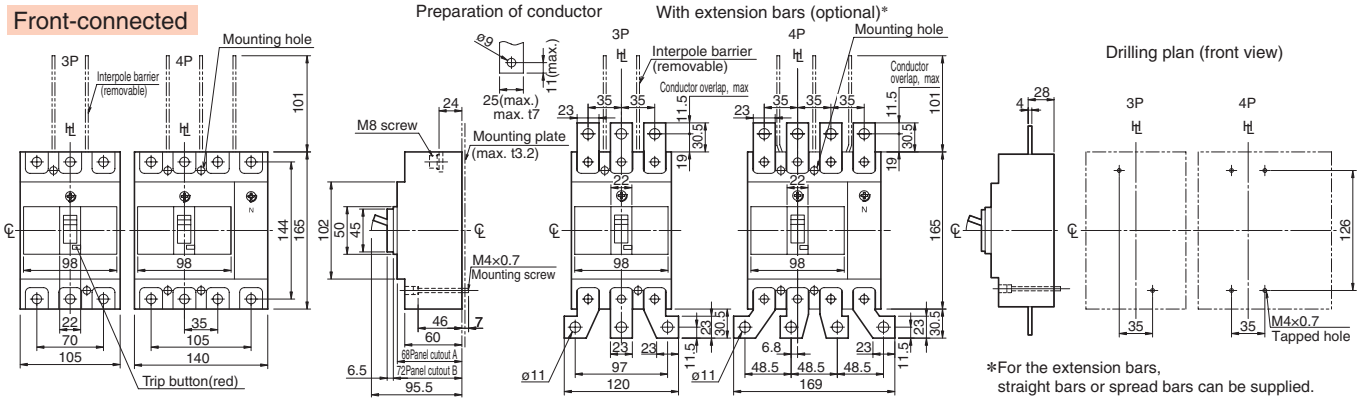

*For the extension bars, straight bars or spread bars can be supplied.

Rear-connected

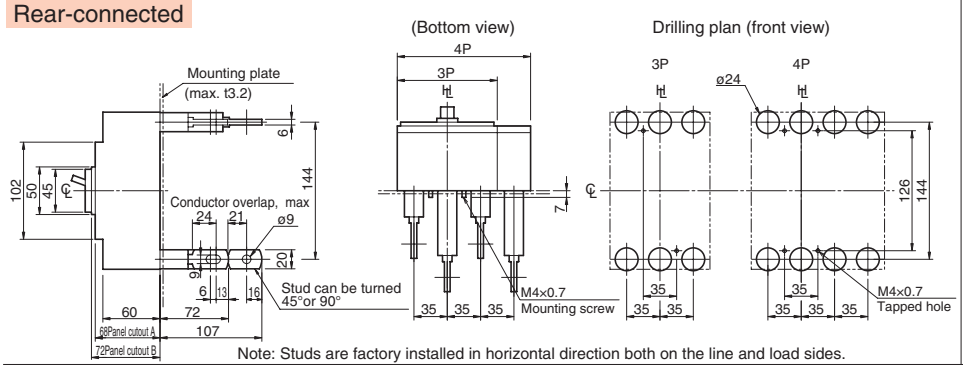

Note: Studs are factory installed in horizontal direction both on the line and load sides.

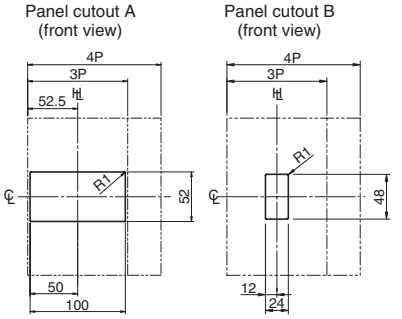

Panel cutout dimensions shown give an allowance of 1.0mm around the handle escutcheon.

Plug-in (Standard)

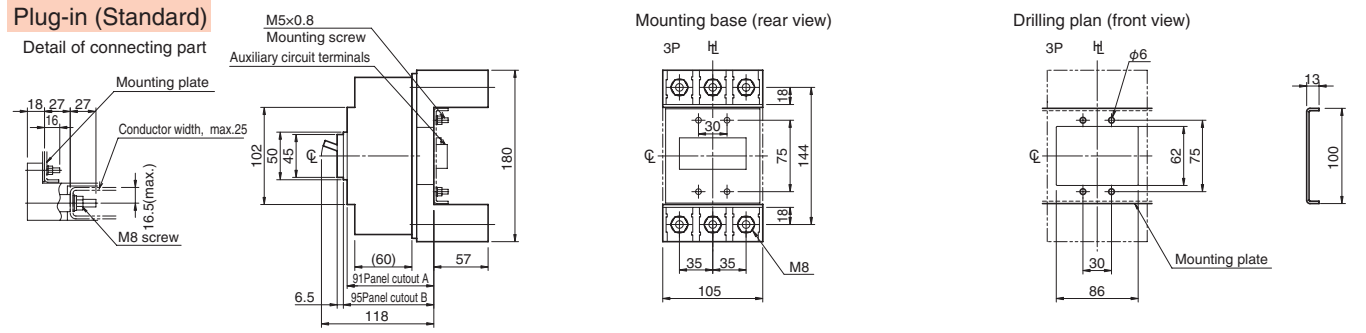

Plug-in (High-performance)

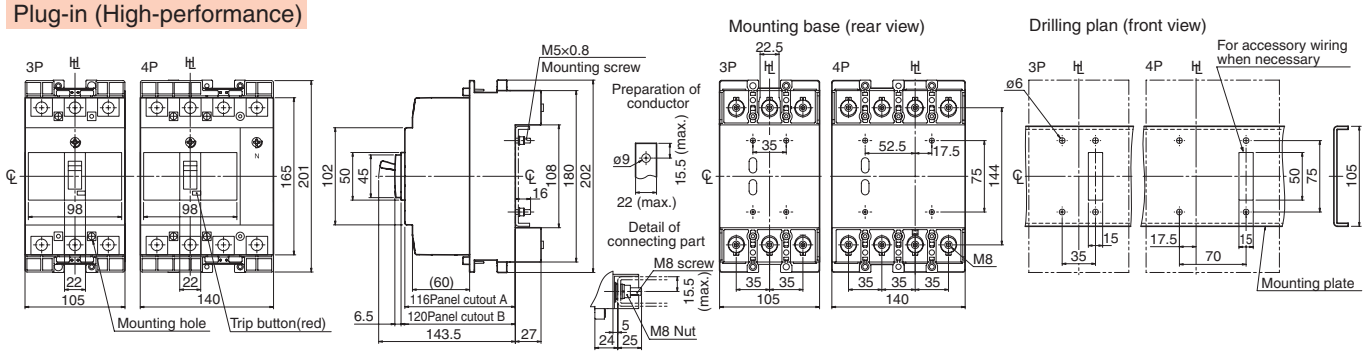

Flush-mounted

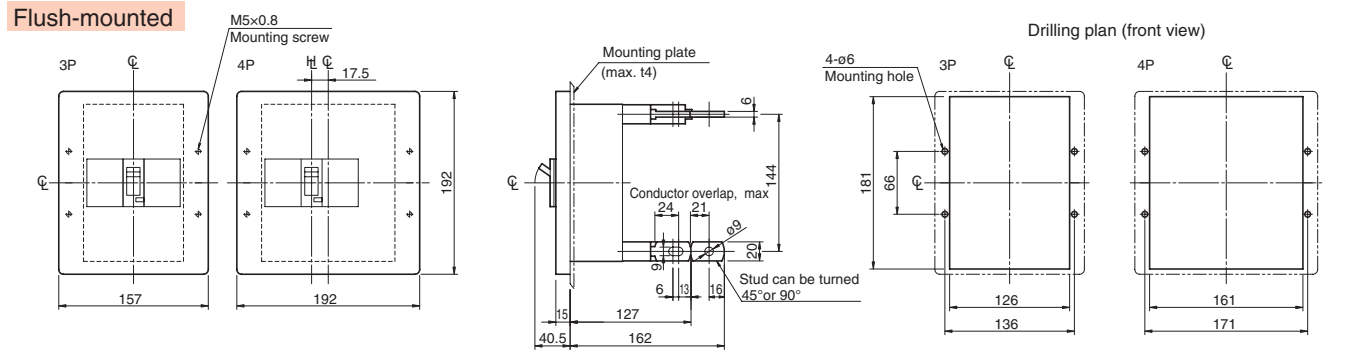

7 Characteristics and Outline Dimensions

TemBreak PRO

Moulded Case Circuit Breakers

H225-NF, L225-NF

Ratings and Specifications

Frame size (A)			225		225			
Type			H225-NF		L225-NF			
Number of poles			3	4	3	4		
■ Ratings								
Rated current, A			125	225	125	225		
Calibrated at 40°C			150		150			
45°C			175		175			
			200		200			
Rated insulation voltage〔U_i〕 V			690		690			
Rated impulse withstand voltage〔U_{imp}〕 kV			8		8			
Rated short time withstand current 〔I_{cw}〕 kA			—		—			
Utilization Category			A		A			
■ Rated breaking capacity, kA								
JIS C 8201-2-1 Ann.1 Ann.2	AC	690V	20/15		25/20			
IEC 60947-2		500V	45/45		65/65			
I_{cu}/I_{cs}(sym)		440V	120/80		180/135			
		415V	125/85		200/150			
		380V	125/85		200/150			
		240V	150/150		200/150			
	① DC	250V	40/40		40/40			
		125V	40/40		40/40			
NK	AC	690V	20/15		25/20			
I_{cu}/I_{cs}(sym)		450V	120/80		180/135			
		240V	150/150		200/150 ㉛			
	DC	250V	—		—			
Weight (◉ marked standard type) kg			2.4	3.2	2.4	3.2		
■ Connections and Mountings								
Front-connected (FC)	Terminal screws		◉		◉			
	With extension bars		○ ㊸		○ ㊸			
Rear-connected (RC)	Flat bar studs		○		○			
Plug-in (PM) For switchboards	High-performance (PMB)		○ ㊶		○ ㊶			
	Standard (PMC)		○	—	○	—		
For distribution boards (PMD)			—		—			
Flush-mounted (FP)	With flat bar studs		○		○			
Draw-out type (DR)			—		—			
TemPlug70 (PG)			▲ ㊶	—	—			
DIN rail mount			—		—			
■ Accessories (optional)		Symbol						
Externally mounted: Motor operator		M C	●		●			
External operating handle	Breaker-mounted	H B	●		●			
	Door-mounted (variable depth)	H P	●		●			
Toggle extension		H A	—		—			
Mechanical interlock	Slide type	M S	●		●			
	Rear-connected type	M B	—		—			
	Link type	M L	●		●			
	Wire type	MW	●		●			
Toggle holder		H H	●		●			
Toggle lock		H L	●		●			
Terminal cover	For front-connected	C F	●		●			
	For rear-connected and plug-in	C R	●		●			
Terminal block for lead		T F	●		●			
Door flange		D F	●		●			
CE marking			Yes		Yes			
Overcurrent trip mechanism			Thermal-magnetic		Thermal-magnetic			
Colour of cover			Grey Blue		Grey Blue			
Trip button (Colour)			Yes (Red)		Yes (Red)			
Suitability for isolation			Yes		Yes			
Reverse connection			Yes ㉒		Yes ㉒			

Notes:

◉ : Standard. This configuration used unless otherwise specified. ○ : Optional standard. Specify when ordering.
▲ : Semi-standard. ● : "yes" or "available". — : "no" or "not available"
① : DC is a special specification. When ordering, please specify DC.
㉛ : Also applicable to 415V AC.
㊶ : A safety lock function is provided.
㊸ : For the extension bars, please place the order separately in parts.
㉒ : There are some limitations. See page 5-23 for details.
㊶ : They cannot be applied to circuits with a short circuit breaking current exceeding 85kA.

Time/Current characteristic curves

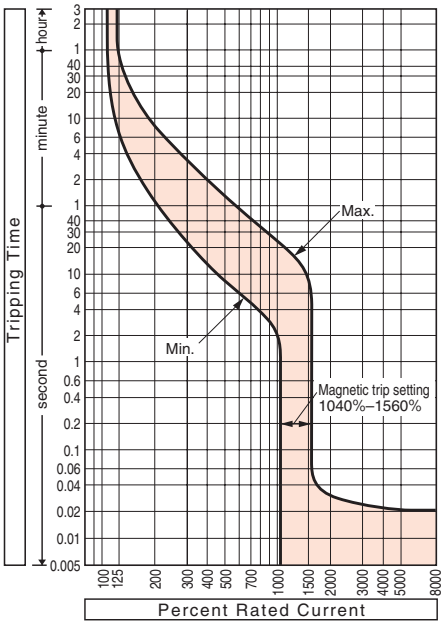

Ambient compensating curves

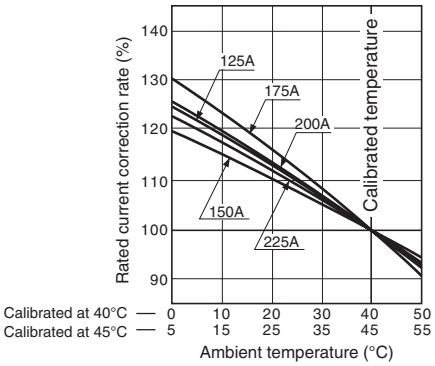

Combinations of Internally Mounted Accessories (Optional)

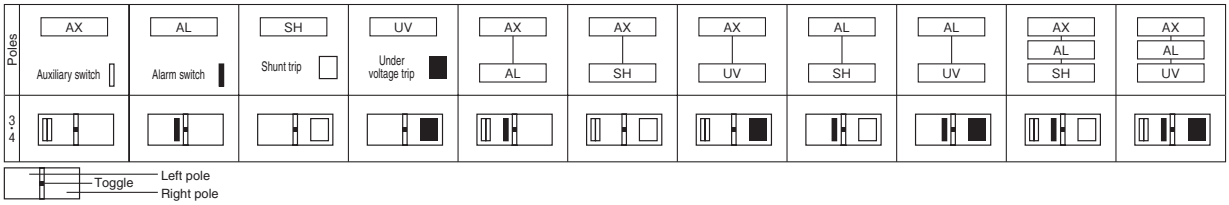

Outline dimensions (mm) — H225-NF, L225-NF

Front-connected

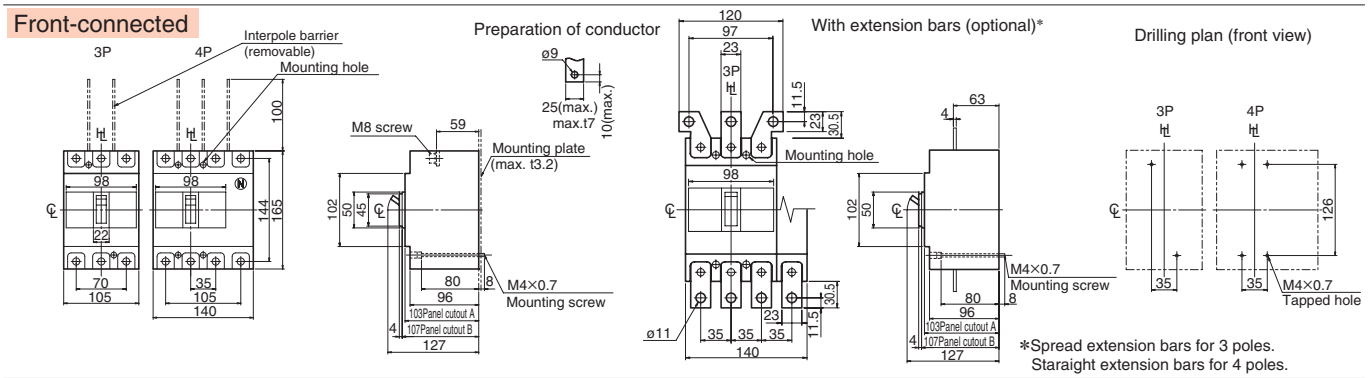

Rear-connected

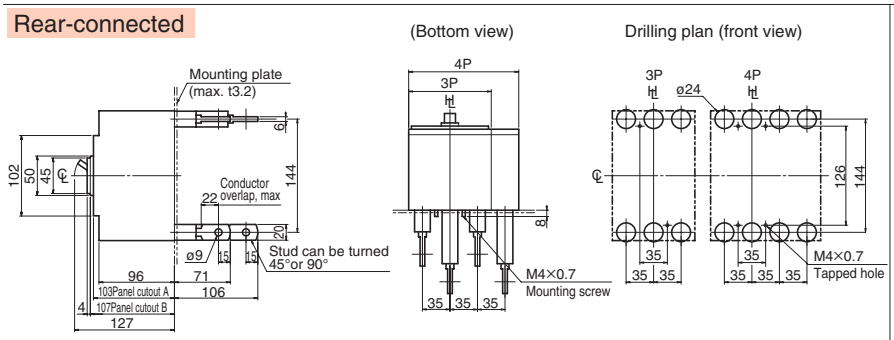

Note: Studs are factory installed in horizontal direction both on the line and load sides.

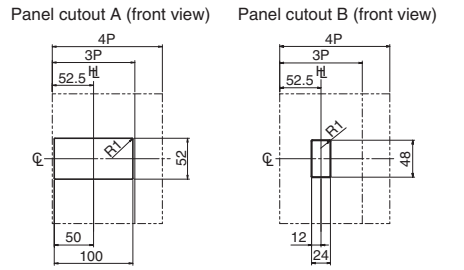

Panel cutout dimensions shown give an allowance of 1.0mm around the handle escutcheon.

Plug-in(Standard)

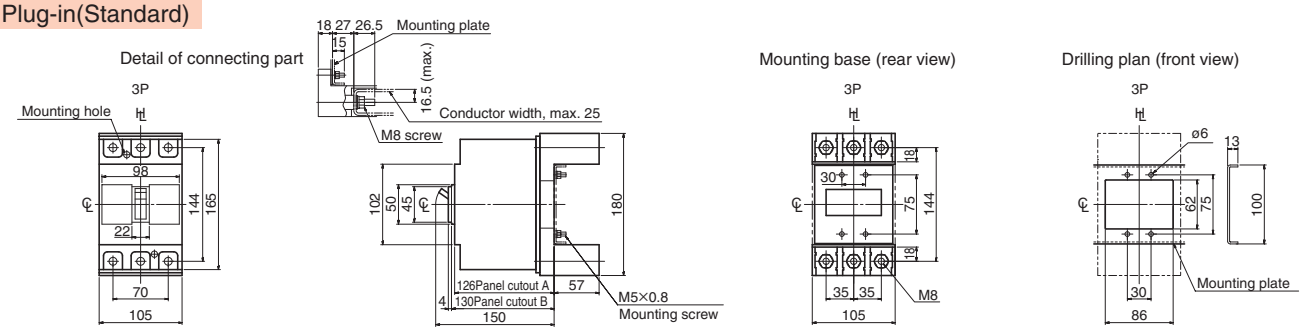

Plug-in (High-performance)

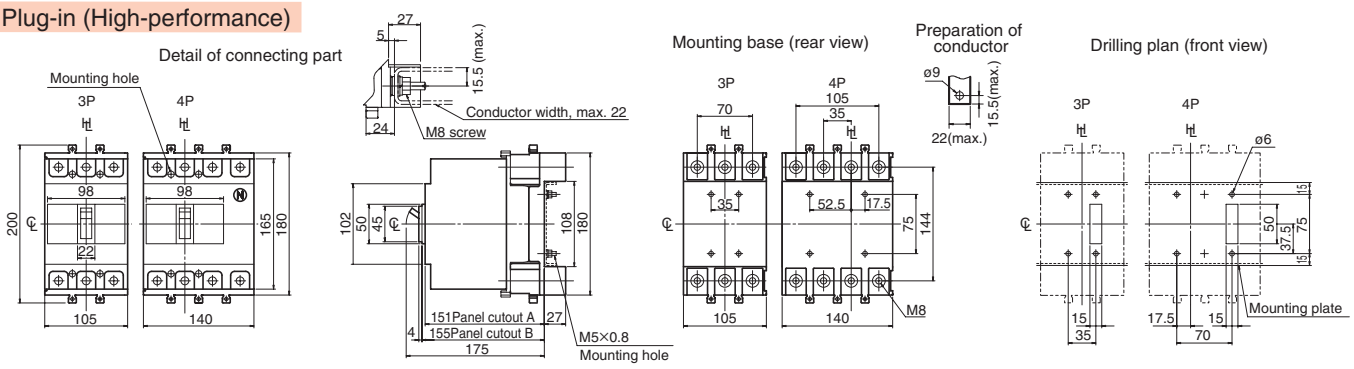

Flush-mounted

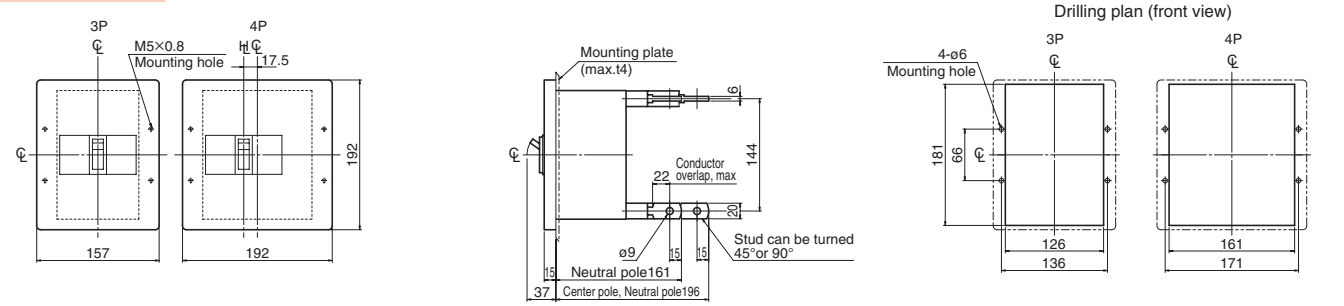

Note: Studs are factory installed in horizontal direction both on the line and load sides.

7 Characteristics and Outline Dimensions TemBreak PRO

Moulded Case Circuit Breakers

H250-NF, L250-NF

Ratings and Specifications

Frame size (A)			250		250	
Type			H250-NF		L250-NF	
Number of poles			3	4	3	4
■ Ratings						
Rated current, A			250		250	
Calibrated at 40°C						
45°C						
Rated insulation voltage〔U_i〕 V			690		690	
Rated impulse withstand voltage〔U_{imp}〕 kV			8		8	
Rated short time withstand current 〔I_{cw}〕 kA			—		—	
Utilization Category			A		A	
■ Rated breaking capacity, kA						
JIS C 8201-2-1 Ann.1 Ann.2	AC	690V	20/15		25/20	
IEC 60947-2		500V	45/45		65/65	
I_{cu}/I_{cs}(sym)		440V	120/80		180/135	
		415V	125/85		200/150	
		380V	125/85		200/150	
		240V	150/150		200/150	
	① DC	250V	40/40		40/40	
		125V	40/40		40/40	
NK	AC	690V	—		—	
I_{cu}/I_{cs}(sym)		450V	—		—	
		240V	—		—	
	DC	250V	—		—	
Weight (◉ marked standard type) kg			2.4	3.2	2.4	3.2
■ Connections and Mountings						
Front-connected (FC)	Terminal screws		◉		◉	
	With extension bars		○ ㊸		○ ㊸	
Rear-connected (RC)	Flat bar studs		○		○	
Plug-in (PM) For switchboards	High-performance (PMB)		—		—	
	Standard (PMC)		—		—	
For distribution boards (PMD)			—		—	
Flush-mounted (FP)	With flat bar studs		○		○	
Draw-out type (DR)			—		—	
TemPlug70 (PG)			—		—	
DIN rail mount			—		—	
■ Accessories (optional)		Symbol				
Externally mounted: Motor operator		M C	●		●	
External operating handle	Breaker-mounted	H B	●		●	
	Door-mounted (variable depth)	H P	●		●	
Toggle extension		H A	—		—	
Mechanical interlock	Slide type	M S	●		●	
	Rear-connected type	M B	—		—	
	Link type	M L	●		●	
	Wire type	MW	●		●	
Toggle holder		H H	●		●	
Toggle lock		H L	●		●	
Terminal cover	For front-connected	C F	●		●	
	For rear-connected and plug-in	C R	●		●	
Terminal block for lead		T F	●		●	
Door flange		D F	●		●	
CE marking			Yes		Yes	
Overcurrent trip mechanism			Thermal-magnetic		Thermal-magnetic	
Colour of cover			Grey Blue		Grey Blue	
Trip button (Colour)			Yes (Red)		Yes (Red)	
Suitability for isolation			Yes		Yes	
Reverse connection			Yes ㉒		Yes ㉒	

Notes:

◉ : Standard. This configuration used unless otherwise specified. ○ : Optional standard. Specify when ordering.
▲ : Semi-standard. ● : "yes" or "available". — : "no" or "not available"
① : DC is a special specification. When ordering, please specify DC.
㊸ : For the extension bars, please place the order separately in parts.
㉒ : There are some limitations. See page 5-23 for details.

Time/Current characteristic curves

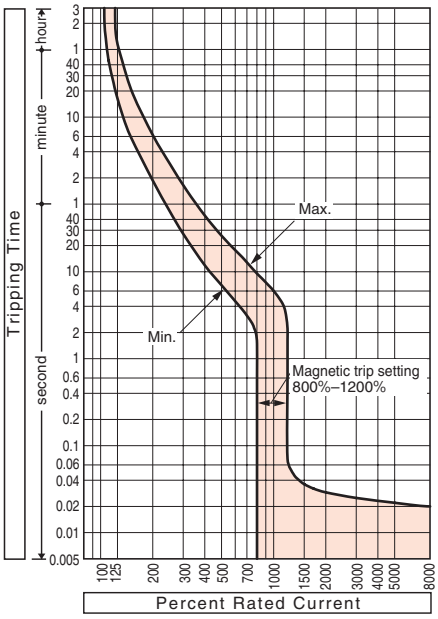

Ambient compensating curves

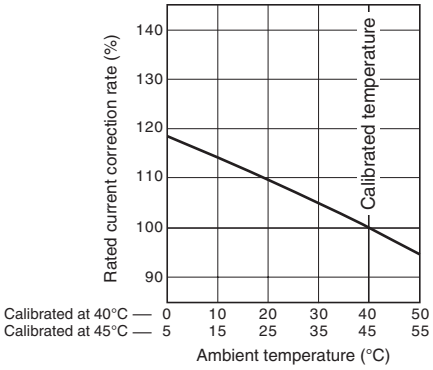

Combinations of Internally Mounted Accessories (Optional)

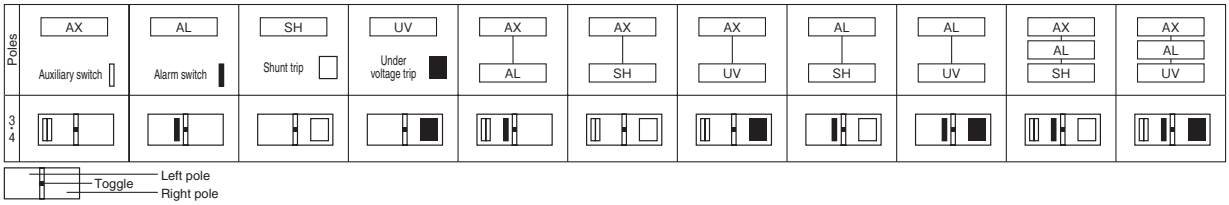

Outline dimensions (mm) H250-NF, L250-NF

Front-connected

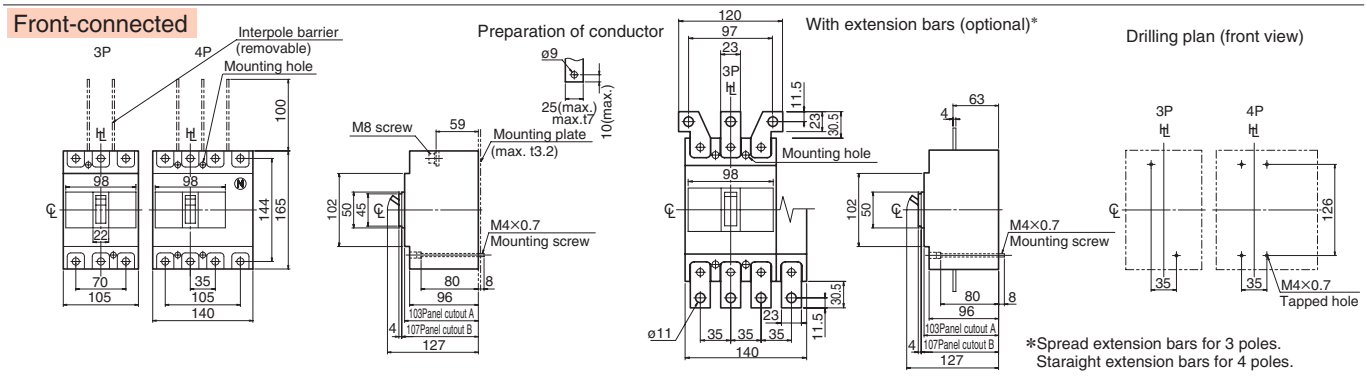

Rear-connected

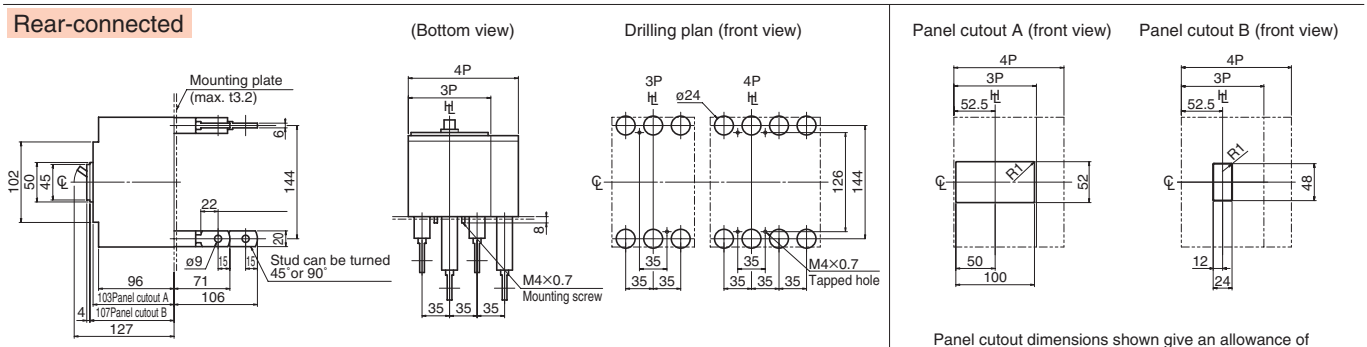

Note: Studs are factory installed in horizontal direction both on the line and load sides.

Panel cutout dimensions shown give an allowance of 1.0mm around the handle escutcheon.

Flush-mounted

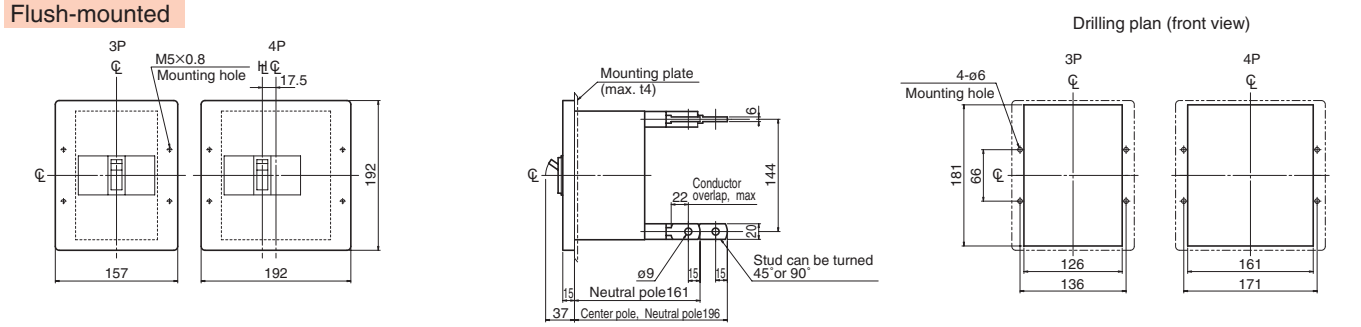

Note: Studs are factory installed in horizontal direction both on the line and load sides.

7 Characteristics and Outline Dimensions TemBreak PRO

Moulded Case Circuit Breakers

H225-NE

Ratings and Specifications

Frame size (A)			225				
Type			**H225-NE**				
Number of poles			3	4			
■ Ratings							
Rated current, A			(Adjustable)				
Calibrated at 40°C			125				
45°C			150				
⑱			175				
			200				
			225				
Rated insulation voltage〔U_i〕 V			690				
Rated impulse withstand voltage〔U_{imp}〕 kV			8				
Rated short time withstand current 〔I_{cw}〕 kA			—				
Utilization Category			A				
■ Rated breaking capacity, kA							
JIS C 8201-2-1 Ann.1 Ann.2	AC	690V	20/15				
IEC 60947-2		500V	45/45				
I_{cu}/I_{cs}(sym)		440V	120/80				
		415V	125/85				
		380V	125/85				
		240V	150/150				
	DC	250V	—				
		125V	—				
NK	AC	690V	—				
I_{cu}/I_{cs}(sym)		450V	—				
		240V	—				
	DC	250V	—				
Weight (◉ marked standard type) kg			2.5	3.3			
■ Connections and Mountings							
Front-connected (FC)	Terminal screws		◉				
	With extension bars		○ ㊸				
Rear-connected (RC)	Flat bar studs		○				
Plug-in (PM)	For switchboards	High-performance (PMB)	—				
		Standard (PMC)	—				
	For distribution boards (PMD)		—				
Flush-mounted (FP)	With flat bar studs		○				
Draw-out type (DR)			—				
TemPlug70 (PG)			—				
DIN rail mount			—				
■ Accessories (optional)		Symbol					
Externally mounted: Motor operator		M C	●				
External operating handle	Breaker-mounted	H B	●				
	Door-mounted (variable depth)	H P	●				
Toggle extension		H A	—				
Mechanical interlock	Slide type	M S	●				
	Rear-connected type	M B	—				
	Link type	M L	●				
	Wire type	M W	●				
Toggle holder		H H	●				
Toggle lock		H L	●				
Terminal cover	For front-connected	C F	●				
	For rear-connected and plug-in	C R	●				
Terminal block for lead		T F	●				
Door flange		D F	●				
CE marking			Yes				
Overcurrent trip mechanism			Electronic ⑳				
Colour of cover			Grey Blue				
Trip button (Colour)			Yes (Red)				
Suitability for isolation			Yes				
Reverse connection			Yes ⑫				

Time/Current characteristic curves

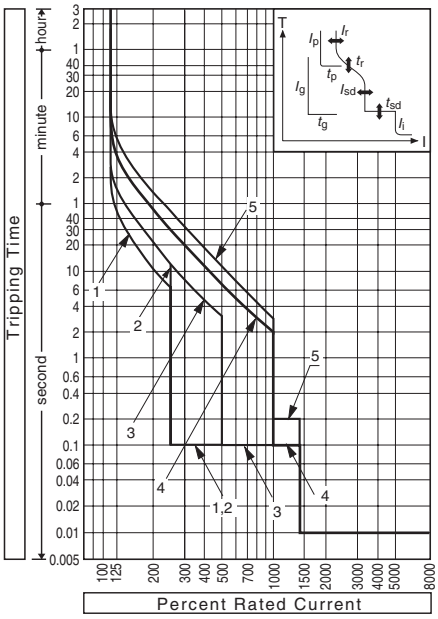

Overcurrent tripping characteristics

Characteristics No.		1	2	3	4	5
Rated current settings (A) : (I_r)		CT rated current : (I_{CT}) = 250A 125, 150, 175, 200, 225				
Long time-delay time settings (s) : (t_r)		11	21	21	5	7.5
		at (I_r)×200%			at (I_r)×600%	
		Setting tolerance ±20%				
Short time-delay pick-up current (A) : (I_{sd})	(I_r)×	2.5	2.5	5	10	10
		Setting tolerance ±15%				
Short time-delay time settings (s) : (t_{sd})		0.1	0.1	0.1	0.1	0.2
		Total clearing time +50ms, resettable time –20ms				
Instantaneous trip pick-up current (A) : (I_i)		(I_r)×1400% Setting tolerance ±20%				
Option: Preferential trip alarm						
Pick-up current (A) : (I_p)		(I_r)×80% Setting tolerance ±10%				
Time settings (s) : (t_p)		Definite time-delay characteristic, 40sec. Setting tolerance ±10%				
Option: Neutral protection						
Pick-up current (A) : (I_N)		(I_r)×100%				
Time settings (s) : (t_N)		(t_N)=(t_r) Same as Long time-delay time settings				

Remark: Characteristic No.4 will be applied as standard setting unless otherwise specified.

Notes:

◉ : Standard. This configuration used unless otherwise specified. ○ : Optional standard. Specify when ordering.

● : "yes" or "available". — : "no" or "not available".

⑳ : Optional preferential trip alarm function available on request.

㊸ : For the extension bars, please place the order separately in parts.

⑫ : There are some limitations. See page 5-23 for details.

⑱ : If the ambient temperature exceeds 45° C, reduce the operating current in accordance with 2 Environmental operating conditions of the chapter 8.

Combinations of Internally Mounted Accessories (Optional)

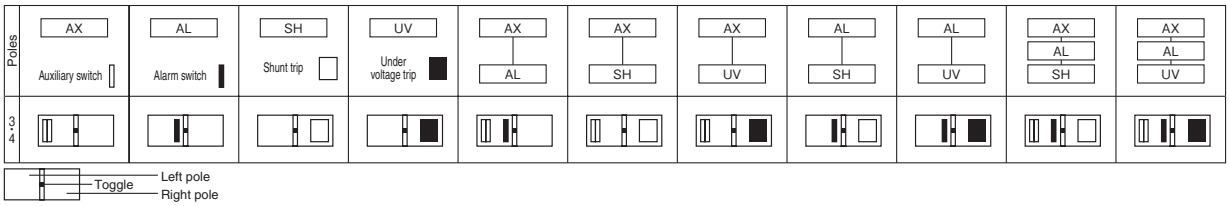

Outline dimensions (mm) H225-NE

Front-connected

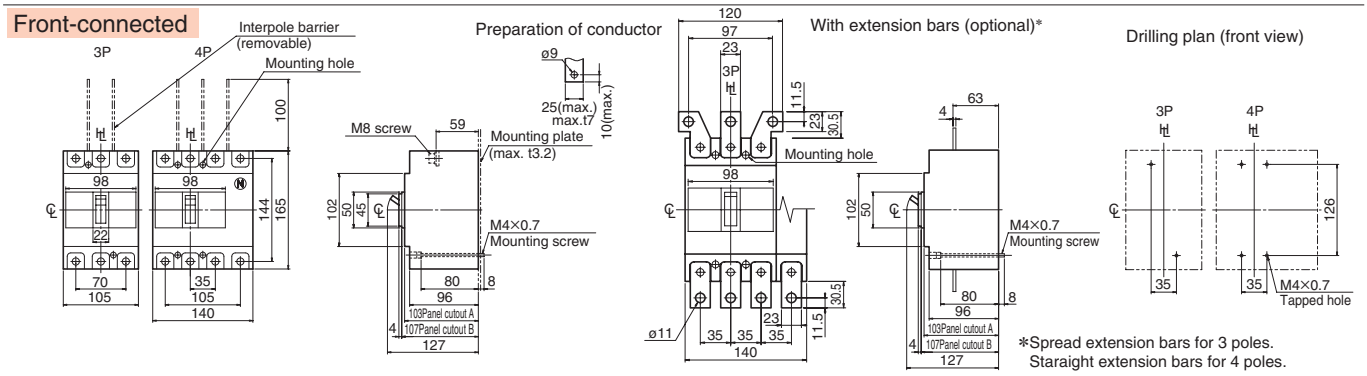

Rear-connected

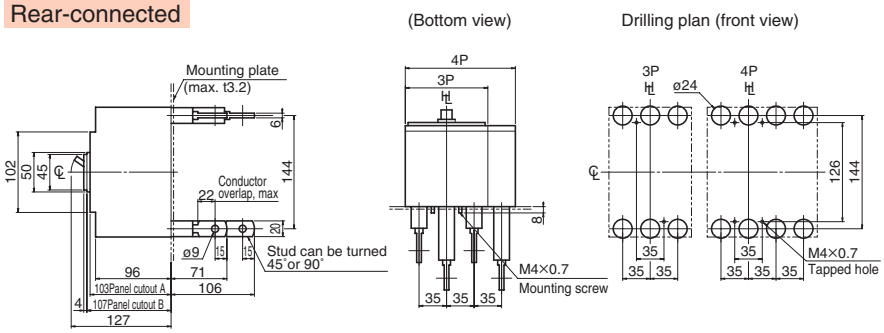

Note: Studs are factory installed in horizontal direction both on the line and load sides.

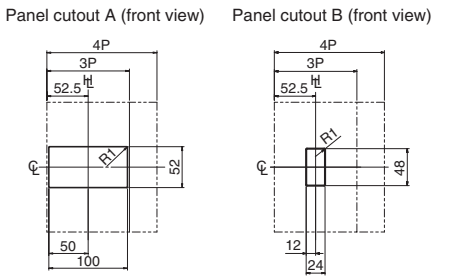

Panel cutout dimensions shown give an allowance of 1.0mm around the handle escutcheon.

Flush-mounted

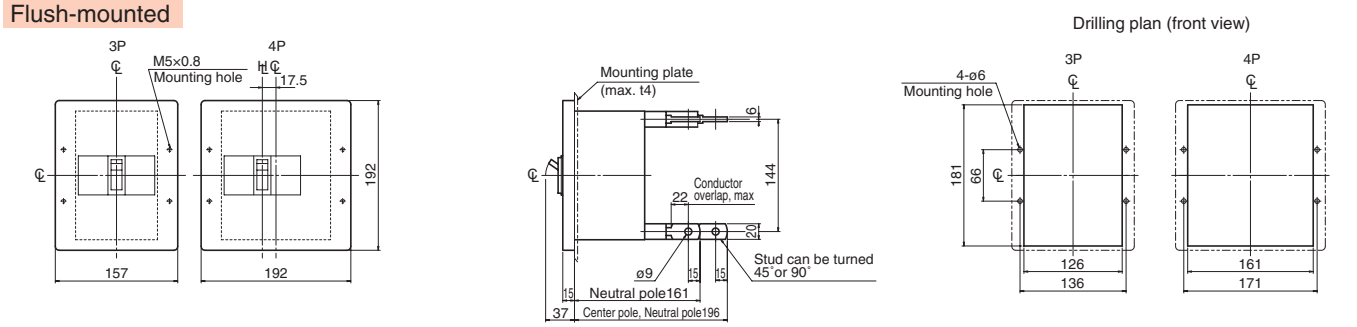

Note: Studs are factory installed in horizontal direction both on the line and load sides.

7 Characteristics and Outline Dimensions TemBreak PRO

Moulded Case Circuit Breakers

E400-NF

Ratings and Specifications

Frame size (A)			400			
Type			E400-NF			
Number of poles			3			
■ Ratings						
Rated current, A			250			
Calibrated at 40°C			300			
45°C			350			
			400			
Rated insulation voltage〔U_i〕 V			690			
Rated impulse withstand voltage〔U_{imp}〕 kV			8			
Rated short time withstand current 〔I_{cw}〕 kA			—			
Utilization Category			A			
■ Rated breaking capacity, kA						
JIS C 8201-2-1 Ann.1 Ann.2	AC	690V	—			
IEC 60947-2		500V	15/15			
I_{cu}/I_{cs}(sym)		440V	22/22			
		415V	25/25			
		380V	25/25			
		240V	35/35			
	① DC	250V	25/19			
		125V	40/30			
NK	AC	690V	—			
I_{cu}/I_{cs}(sym)		450V	—			
		240V	—			
	① DC	250V	—			
Weight (◉ marked standard type) kg			4.2			
■ Connections and Mountings						
Front-connected (FC)	Terminal screws		◉			
	With extension bars		○			
Rear-connected (RC)	Flat bar studs		○			
Plug-in (PM) For switchboards	High-performance (PMB)		—			
	Standard (PMC)		—			
For distribution boards (PMD)			—			
Flush-mounted (FP)	With flat bar studs		○			
Draw-out type (DR)			—			
TemPlug70 (PG)			○			
DIN rail mount			—			
■ Accessories (optional)		Symbol				
Externally mounted: Motor operator		M C	●			
External operating handle	Breaker-mounted	H B	●			
	Door-mounted (variable depth)	H P	●			
Toggle extension		H A	●			
Mechanical interlock	Slide type	M S	●			
	Rear-connected type	M B	—			
	Link type	M L	●			
	Wire type	MW	●			
Toggle holder		H H	●			
Toggle lock		H L				
Terminal cover	For front-connected	C F	●			
	For rear-connected and plug-in	C R	●			
Terminal block for lead		T F	●			
Door flange		D F	●			
CE marking			Yes			
Overcurrent trip mechanism			Thermal-magnetic			
Colour of cover			Grey Blue			
Trip button (Colour)			Yes (Red)			
Suitability for isolation			Yes			
Reverse connection			Yes			

Notes:
◉ : Standard. This configuration used unless otherwise specified. ○ : Optional standard. Specify when ordering.
▲ : Semi-standard. ● : "yes" or "available". — : "no" or "not available".
① : DC is a special specification. When ordering, please specify DC.

Time/Current characteristic curves

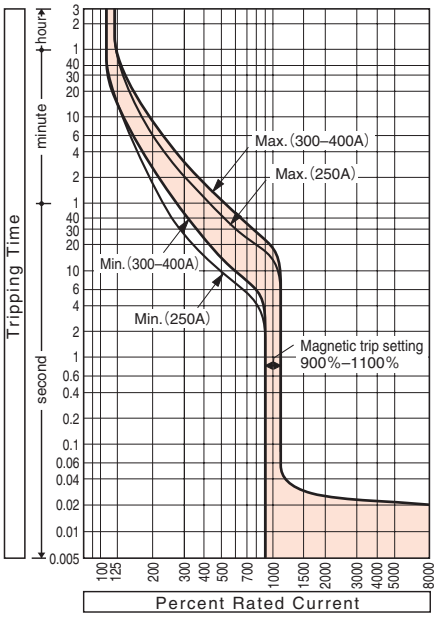

Ambient compensating curves

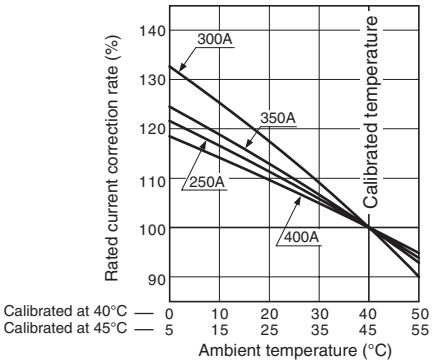

Magnetic trip pick-up current

Rated current (A)	Magnetic trip pick-up current (A) $I_n \times 10$
250	2500
300	3000
350	3500
400	4000

Note(1): Setting tolerance: ±10%.

Combinations of Internally Mounted Accessories (Optional)

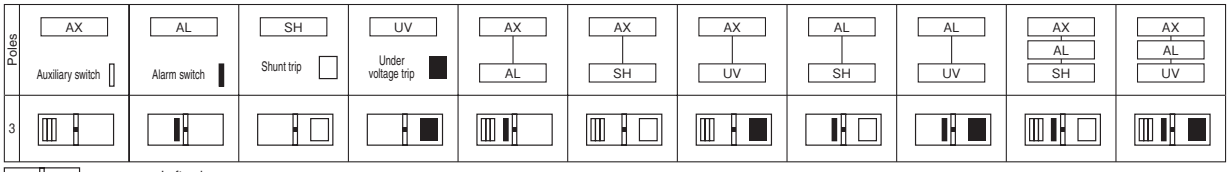

Note: For auxiliary switches or alarm switches, left-hand mounting has priority.

Outline dimensions (mm) E400-NF

Front-connected

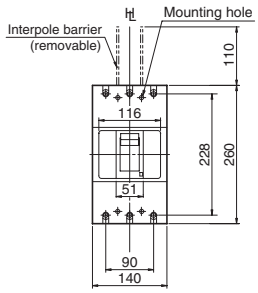

Preparation of conductor

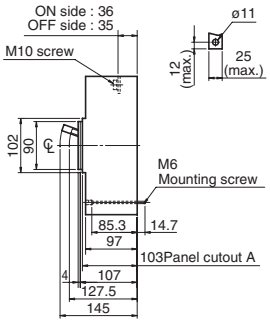

With extension bars (optional)

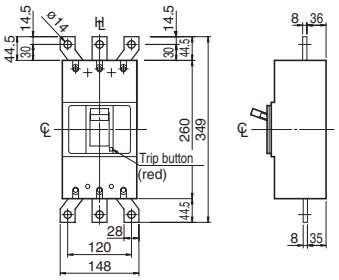

Drilling plan (front view)

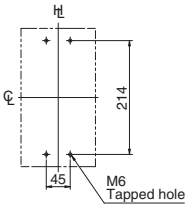

Rear-connected

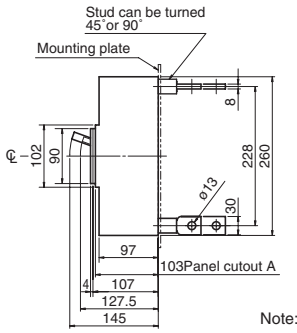

Detail of connecting part

(Bottom view)

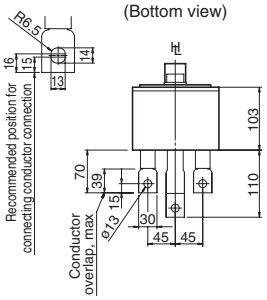

Drilling plan (front view)

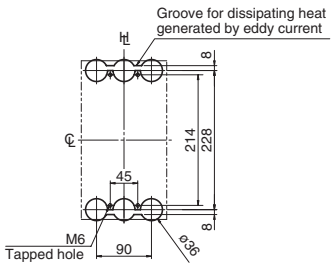

Panel cutout A (front view)

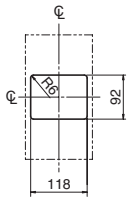

Panel cutout dimensions shown give an allowance of 1.0mm around the handle escutcheon.

Note: Studs are factory installed in horizontal direction both on the line and load sides.

Flush-mounted

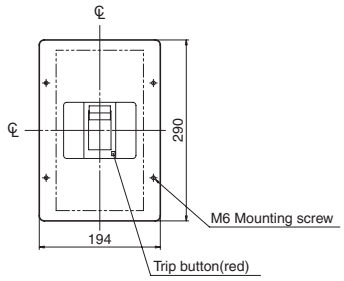

Mounting plate

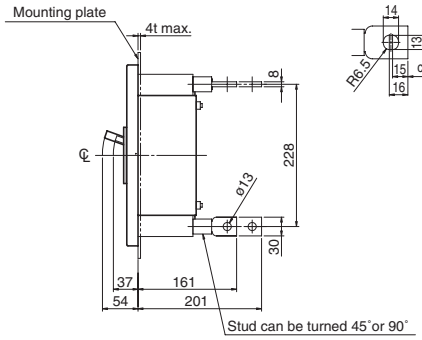

Detail of connecting part

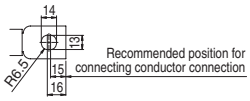

Drilling plan (front view)

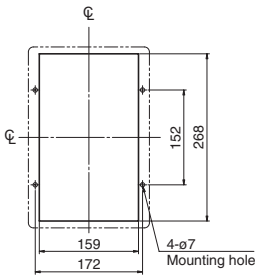

Note: Studs are factory installed in horizontal direction both on the line and load sides.

7 Characteristics and Outline Dimensions TemBreak PRO

Moulded Case Circuit Breakers

PS400-CF, PS400-NF, PS400-GF

Ratings and Specifications

Frame size (A)				400		400		400		
Type				PS400-CF		PS400-NF		PS400-GF		
Number of poles				3	4	3	4	3	4	
■ Ratings										
Rated current, A				225		225		225		
Calibrated at 40°C				250		250		250		
45°C				300		300		300		
				350		350		350		
				400		400		400		
Rated insulation voltage〔U_i〕 V				800		800		800		
Rated impulse withstand voltage〔U_{imp}〕 kV				8		8		8		
Rated short time withstand current〔I_{cw}〕 kA				—		—		—		
Utilization Category				A		A		A		
■ Rated breaking capacity, kA										
JIS C 8201-2-1 Ann.1 Ann.2		AC	690V	7/7		12/12		12/12		
IEC 60947-2			500V	25/25		30/30		50/50		
I_{cu}/I_{cs}(sym)			440V	30/30		45/45		65/65		
			415V	36/36		50/50		70/70		
			380V	36/36		50/50		70/70		
			240V	50/50		85/85		100/100		
	①	DC	250V	25/25 ⑰		50/50 ⑰		50/50 ⑰		
			125V	40/40 ⑰		50/50 ⑰		50/50 ⑰		
NK		AC	690V	7/7		12/12		12/12		
I_{cu}/I_{cs}(sym)			450V	30/30		45/45		65/65		
			240V	50/50		85/85		100/100		
	①	DC	250V	25/25 ⑰		50/50 ⑰		50/50 ⑰		
Weight (◉ marked standard type) kg				5.5	7.3	5.5	7.3	5.5	7.3	
■ Connections and Mountings										
Front-connected (FC)	Terminal screws			◉		◉		◉		
	With extension bars			○		○		○		
Rear-connected (RC)	Flat bar studs			○		○		○		
Plug-in (PM)	For switchboards	High-performance (PMB)		○ ㊿		○ ㊿		○ ㊿		
		Standard (PMC)		○	—	○	—	○	—	
	For distribution boards (PMD)			—		—		—		
Flush-mounted (FP)	With flat bar studs			○		○		○		
Draw-out type (DR)				▲		▲		▲		
TemPlug70 (PG)				○	—	○	—	○	—	
DIN rail mount				—		—		—		
■ Accessories (optional)			Symbol							
Externally mounted	Motor operator		M C	●		●		●		
	External operating handle	Breaker-mounted	H B	●		●		●		
		Door-mounted (variable depth)	H P	●		●		●		
	Toggle extension		H A	●		●		●		
	Mechanical interlock ⑨	Slide type	M S	●		●		●		
		Rear-connected type	M B	—		—		—		
		Link type	M L	●		●		●		
		Wire type	M W	●		●		●		
	Toggle holder		H H	●		●		●		
	Toggle lock		H L							
	Terminal cover	For front-connected	C F	●		●		●		
		For rear-connected and plug-in	C R	●		●		●		
	Terminal block for lead		T F	●		●		●		
	Door flange		D F	●		●		●		
CE marking				Yes		Yes		Yes		
Overcurrent trip mechanism				Thermal-magnetic (adjustable)		Thermal-magnetic (adjustable)		Thermal-magnetic (adjustable)		
Colour of cover				Grey Blue		Grey Blue		Grey Blue		
Trip button (Colour)				Yes (Red)		Yes (Red)		Yes (Red)		
Suitability for isolation				Yes		Yes		Yes		
Reverse connection				Yes		Yes		Yes		

Notes:

◉ : Standard. This configuration used unless otherwise specified. ○ : Optional standard. Specify when ordering.
▲ : Semi-standard. ● : "yes" or "available". — : "no" or "not available".
① : DC is a special specification. When ordering, please specify DC.
⑨ : Mechanical interlocks cannot be applied to draw-out type (DR).
⑰ : See page 4-7 for the instantaneous trip value when using with DC.
㊿ : A safety trip function is provided.

Time/Current characteristic curves

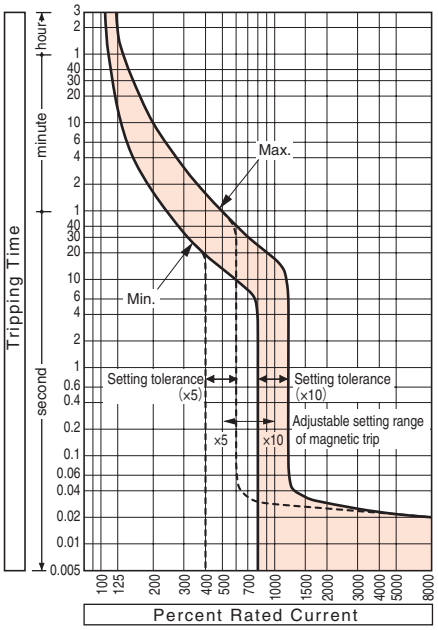

Ambient compensating curves

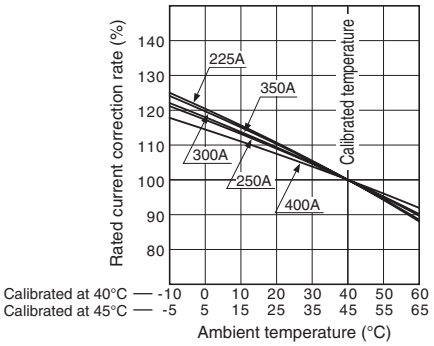

Magnetic trip pick-up current

Rated current (A)	Magnetic trip pick-up current (adjustable range) (A) I_n× 10	9	8	7	6	5
225	2250	2025	1800	1575	1350	1125
250	2500	2250	2000	1750	1500	1250
300	3000	2700	2400	2100	1800	1500
350	3500	3150	2800	2450	2100	1750
400	4000	3600	3200	2800	2400	2000

Note (1): Setting tolerance: ±20%.
Remarks:
(1): Unless otherwise stated when ordering, the selector dial is factory set to position "10".
(2): The trip pick-up current of DC models is not adjustable.

Combinations of Internally Mounted Accessories (Optional)

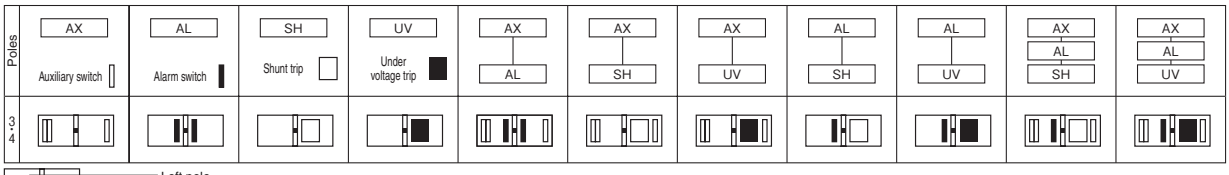

Note: For auxiliary switches or alarm switches, left-hand mounting has priority.

Outline dimensions (mm) — PS400-CF, PS400-NF, PS400-GF

Front-connected

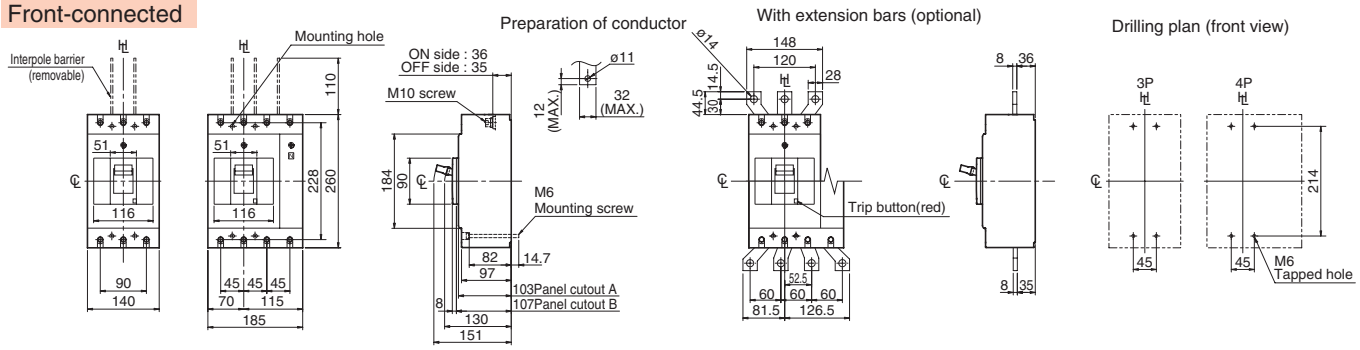

Rear-connected

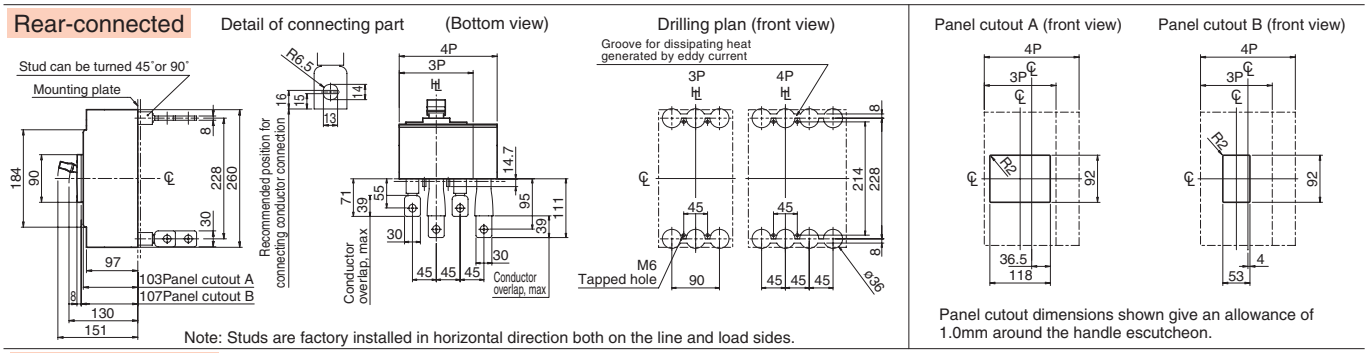

Note: Studs are factory installed in horizontal direction both on the line and load sides.

Panel cutout dimensions shown give an allowance of 1.0mm around the handle escutcheon.

Plug-in (Standard)

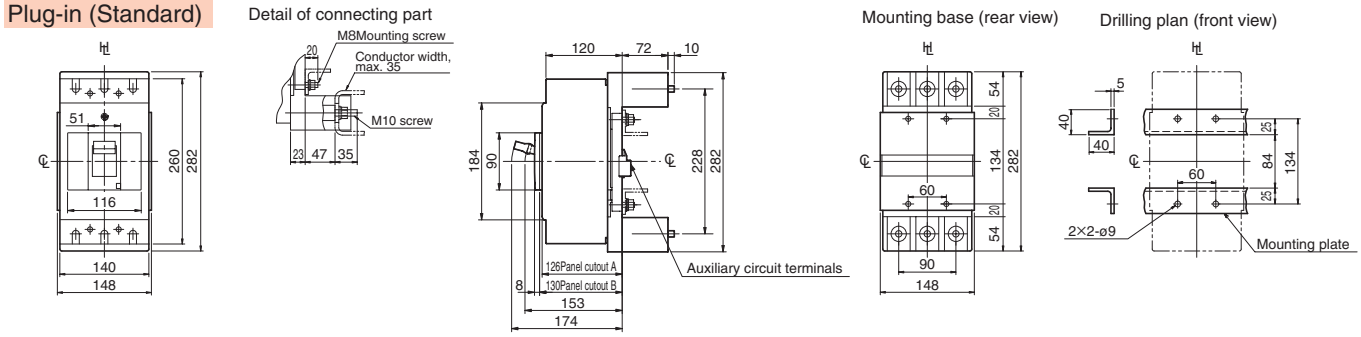

Plug-in (High-performance)

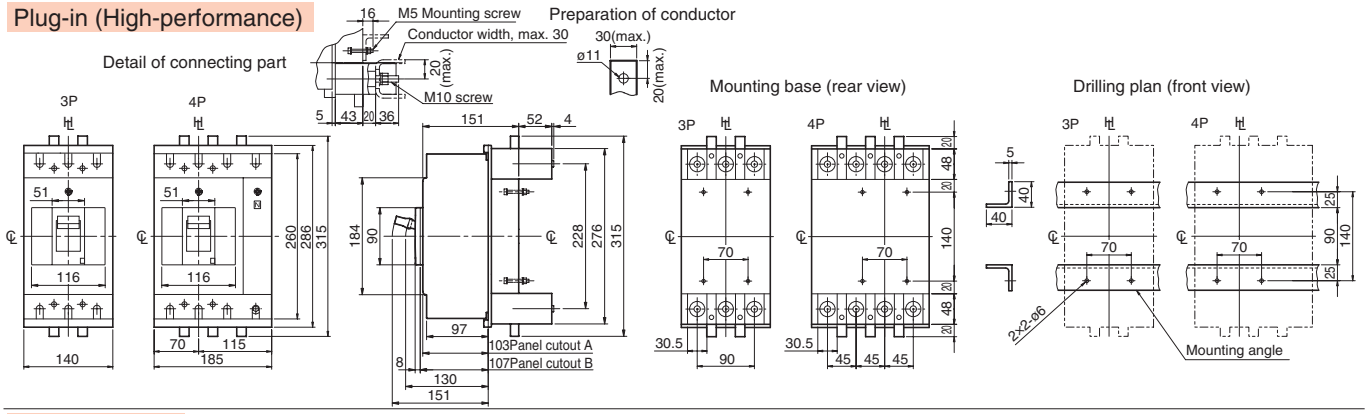

Flush-mounted

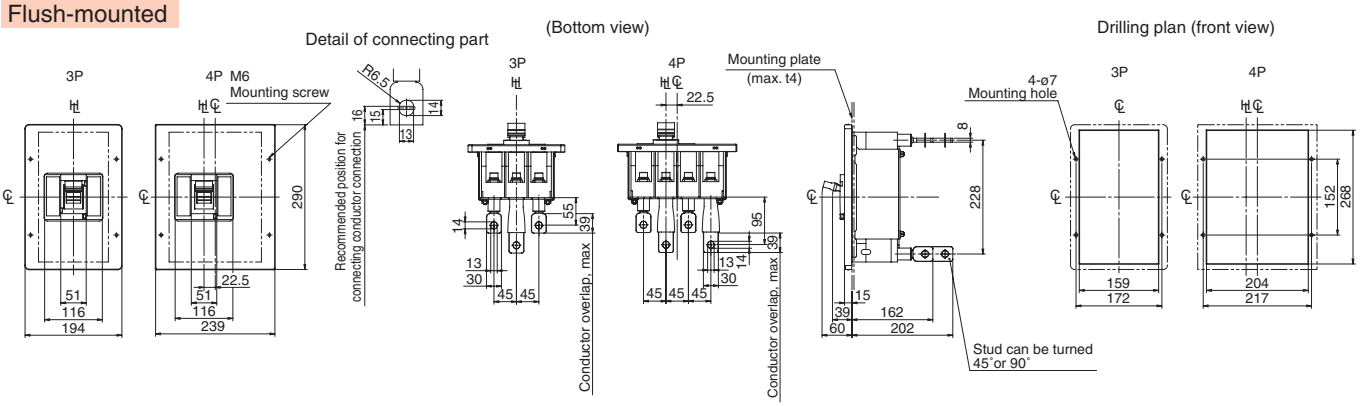

7 Characteristics and Outline Dimensions

TemBreak PRO

Moulded Case Circuit Breakers

PS400-NE, PS400-GE

Ratings and Specifications

Frame size (A)			400		400	
Type			PS400-NE		PS400-GE	
Number of poles			3	4	3	4
■ Ratings						
Rated current, A			Adjustable		Adjustable	
Calibrated at 40°C			I_n=250	I_n=400	I_n=250	I_n=400
45°C			125	175	125	175
⑱			150	200	150	200
			175	225	175	225
			200	250	200	250
			225	300	225	300
			250	350	250	350
				400		400
Rated insulation voltage〔U_i〕 V			800		800	
Rated impulse withstand voltage〔U_{imp}〕 kV			8		8	
Rated short time withstand current 〔I_{cw}〕 kA			5 (0.4sec.)		5 (0.4sec.)	
Utilization Category			B		B	
■ Rated breaking capacity, kA						
JIS C 8201-2-1 Ann.1 Ann.2	AC	690V	12/12		12/12	
IEC 60947-2		500V	30/30		50/50	
I_{cu}/I_{cs}(sym)		440V	45/45		65/65	
		415V	50/50		70/70	
		380V	50/50		70/70	
		240V	85/85		100/100	
	DC	250V	—		—	
		125V	—		—	
NK	AC	690V	12/12		12/12	
I_{cu}/I_{cs}(sym)		450V	45/45		65/65	
		240V	85/85		100/100	
	DC	250V	—		—	
Weight (◉ marked standard type) kg			5.7	7.5	5.7	7.5
■ Connections and Mountings						
Front-connected (FC)	Terminal screws		◉		◉	
	With extension bars		○		○	
Rear-connected (RC)	Flat bar studs		○		○	
Plug-in (PM) For switchboards	High-performance (PMB)		○ ⑤⓪		○ ⑤⓪	
	Standard (PMC)		○	—	○	—
For distribution boards (PMD)			—		—	
Flush-mounted (FP)	With flat bar studs		○		○	
Draw-out type (DR)			▲		▲	
TemPlug70 (PG)			○	—	○	—
DIN rail mount			—		—	
■ Accessories (optional)		Symbol				
Externally mounted: Motor operator		M C	●		●	
External operating handle	Breaker-mounted	H B	●		●	
	Door-mounted (variable depth)	H P	●		●	
Toggle extension		H A	●		●	
Mechanical interlock ⑨	Slide type	M S	●		●	
	Rear-connected type	M B	—		—	
	Link type	M L	●		●	
	Wire type	M W	●		●	
Toggle holder		H H	●		●	
Toggle lock		H L				
Terminal cover	For front-connected	C F	●		●	
	For rear-connected and plug-in	C R	●		●	
Terminal block for lead		T F	●		●	
Door flange		D F	●		●	
CE marking			Yes		Yes	
Overcurrent trip mechanism			Electronic		Electronic	
Colour of cover			Grey Blue		Grey Blue	
Trip button (Colour)			Yes (Red)		Yes (Red)	
Suitability for isolation			Yes		Yes	
Reverse connection			Yes		Yes	

Notes:
◉ : Standard. This configuration used unless otherwise specified.
○ : Optional standard. Specify when ordering. ▲ : Semi-standard. ● : "yes" or "available". — : "no" or "not available". ⑨ : Mechanical interlocks cannot be applied to draw-out type (DR). ⑤⓪ : A safety trip function is provided. ⑱ : If the ambient temperature exceeds 45° C, reduce the operating current in accordance with 2 Environmental operating conditions of the chapter 8.

Time/Current characteristic curves

• Long time/Short time trip characteristics

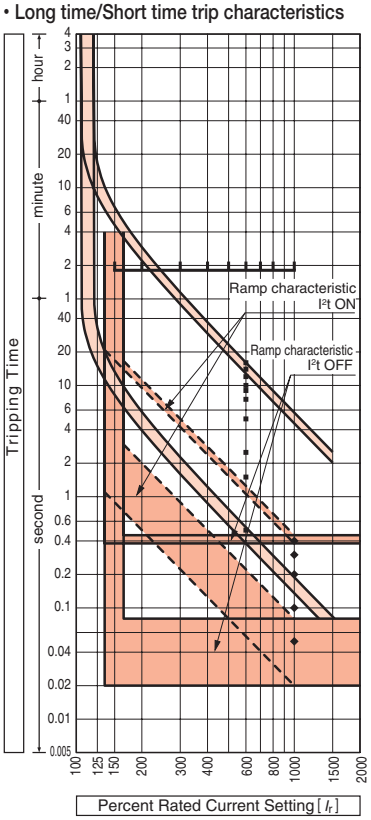

• Instantaneous trip characteristics

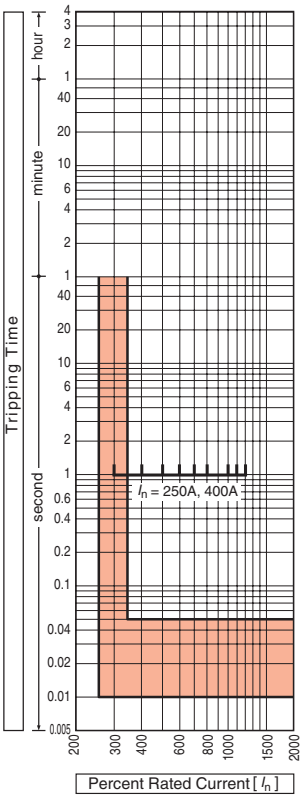

Note: See page 6-4 for Neutral protection, ground fault trip and preferential trip alarm characteristics.

Overcurrent tripping characteristics

TPOP OCR (LSIG) (I_n)=250A, 400A

Rated current settings (A) (I_r) = (I_r1)×(I_r2)	When (I_n)=250A (I_r1) (A)=125, 150, 175, 200, 225, 250 adjustable When (I_n)=400A (I_r1) (A)=175, 200, 225, 250, 300, 350, 400 adjustable
	(I_r2)=0.91, 0.92, 0.93, 0.94, 0.95, 0.96, 0.97, 0.98, 0.99, 1.00
Long time-delay time settings (s) : (t_r)	0.5, 1.5, 2.5, 5, 7.5, 9, 10, 12, 14, 16 adjustable at (I_r)×600%
	Time-delay setting tolerance –20% –20ms or more +0% +30ms or less
Short time-delay pick-up current (A) : (I_{sd})	(I_r)×1.5, 2, 3, 4, 5, 6, 7, 8, 10 or OFF
	Current setting tolerance within ±10%
Short time-delay time settings (ms) : (t_{sd})	50, 100, 200, 300, 400 adjustable
	Ramp characteristics I²t: ON or OFF However, definite time-delay characteristics with (I_r)×10 or more
	When (t_{sd})=50ms Time-delay setting tolerance –30ms or more +30ms or less When (t_{sd})=100ms to 400ms Time-delay setting tolerance –20ms or more +50ms or less
Instantaneous trip pick-up current (A) : (I_i)	(I_n)×3, 4, 5, 6, 7, 8, 10, 11, 12 adjustable
	Current setting tolerance within ±15%
Neutral protection pick-up current (A) : (I_N)	For 3P OFF fixed
	For 4P (I_r)×50%, 100% or OFF
Neutral protection time settings (s) : (t_N)	Operates with long time-delay time setting (t_r) and short time-delay time setting (t_{sd}) and also operates with instantaneous trip
Ground fault trip pick-up current (A) : (I_g)	3P for 3ø3W, 4P for 3ø4W (3P 3ø4W not supported) or OFF (I_n)×20% Current setting tolerance within ±10%
Ground fault trip time settings (ms) : (t_g)	200 Time-delay setting tolerance –20ms or more +50ms or less
Preferential trip alarm pick-up current (A) : (I_p)	(I_r)×80% Current setting tolerance within ±10%
Preferential trip alarm time settings (s) : (t_p)	(t_r)×50% Time-delay setting tolerance –20% –20ms or more +0% +30ms or less

Notes:
1: If not otherwise specified, the product will be delivered with the underlined standard setting values.
2: The TPOT type OCR (LSI) only has long time-delay trip, short time-delay trip, instantaneous trip, and preferential trip alarm.

Combinations of Internally Mounted Accessories (Optional)

Poles	AX	AL	SH	UV	AX + AL	AX + SH	AX + UV	AL + SH	AL + UV	AX + AL + SH	AX + AL + UV
	Auxiliary switch	Alarm switch	Shunt trip	Under voltage trip							
3, 4											

Toggle — Left pole / Right pole

Note: For auxiliary switches or alarm switches, left-hand mounting has priority.

Outline dimensions (mm) — PS400-NE, PS400-GE

Front-connected

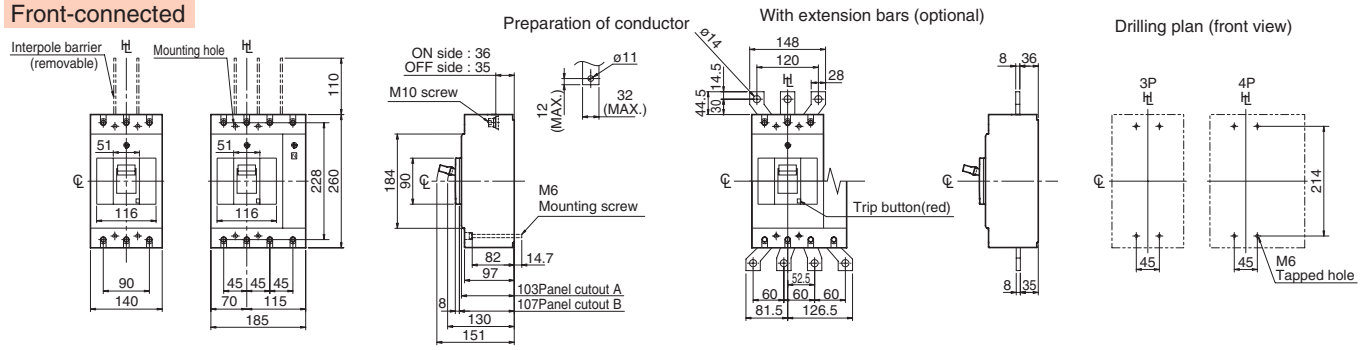

Rear-connected

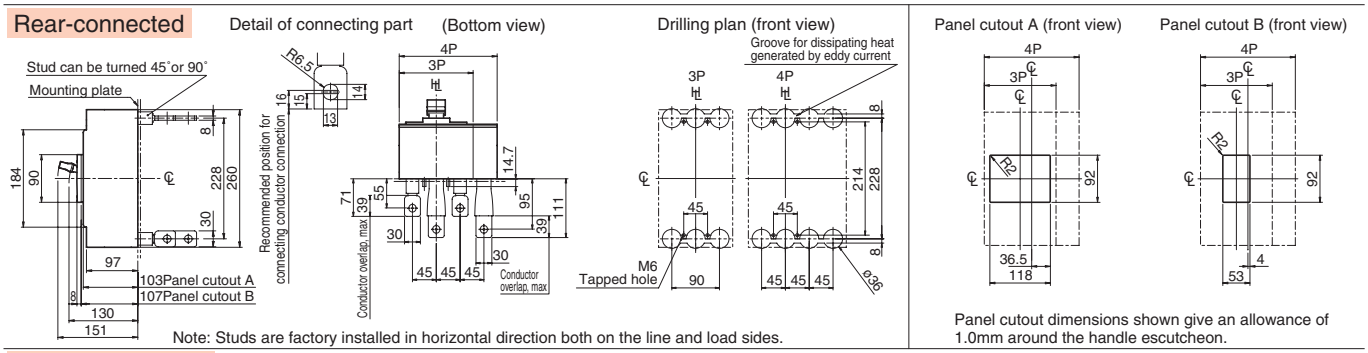

Note: Studs are factory installed in horizontal direction both on the line and load sides.

Panel cutout dimensions shown give an allowance of 1.0mm around the handle escutcheon.

Plug-in (Standard)

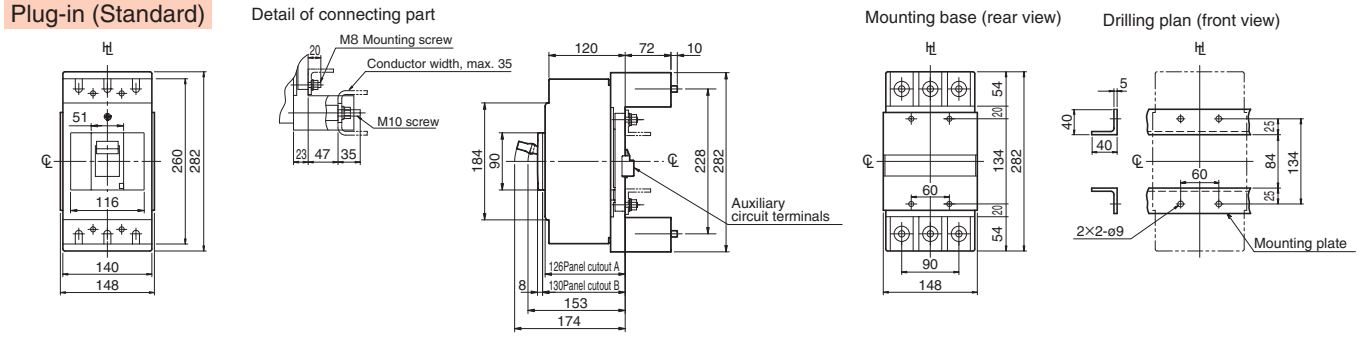

Plug-in (High-performance)

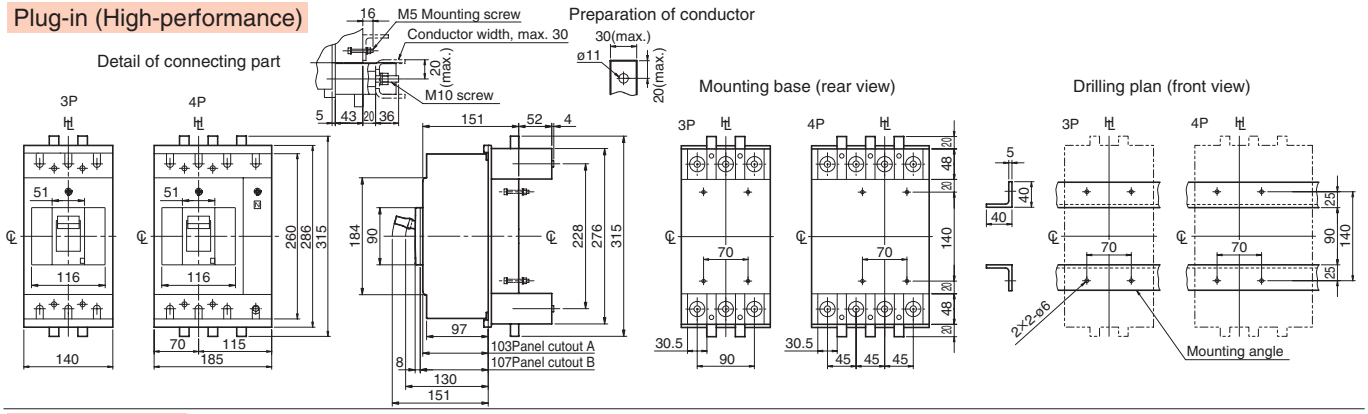

Flush-mounted

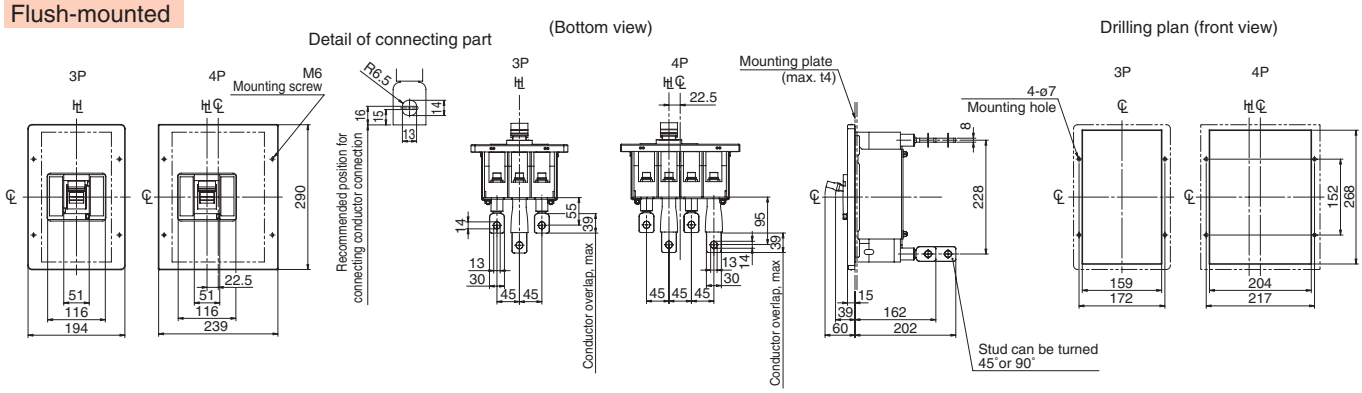

7 Characteristics and Outline Dimensions TemBreak PRO

Moulded Case Circuit Breakers

PH400-CF

Ratings and Specifications

Frame size (A)			400	
Type			PH400-CF	
Number of poles			3	4
■ Ratings				
Rated current, A			225	
Calibrated at 40°C			250	
45°C			300	
			350	
			400	
Rated insulation voltage〔U_i〕 V			800	
Rated impulse withstand voltage〔U_{imp}〕 kV			8	
Rated short time withstand current 〔I_{cw}〕 kA			—	
Utilization Category			A	
■ Rated breaking capacity, kA				
JIS C 8201-2-1 Ann.1 Ann.2	AC	690V	12/12	
IEC 60947-2		500V	65/65	
I_{cu}/I_{cs}(sym)		440V	100/100	
		415V	110/110	
		380V	110/110	
		240V	125/125	
	① DC	250V	50/50 ⑰	
		125V	50/50 ⑰	
NK	AC	690V	12/12	
I_{cu}/I_{cs}(sym)		450V	100/100	
		240V	125/125	
	① DC	250V	50/50 ⑰	
Weight (◉ marked standard type) kg			5.5	7.3
■ Connections and Mountings				
Front-connected (FC)	Terminal screws		◉	
	With extension bars		○	
Rear-connected (RC)	Flat bar studs		○	
Plug-in (PM) For switchboards	High-performance (PMB)		○ ㊿	
	Standard (PMC)		○	—
For distribution boards (PMD)			—	
Flush-mounted (FP)	With flat bar studs		○	
Draw-out type (DR)			▲	
TemPlug70 (PG)			▲ ㊶	—
DIN rail mount			—	
■ Accessories (optional)		Symbol		
Externally mounted: Motor operator		M C	●	
External operating handle: Breaker-mounted		H B	●	
External operating handle: Door-mounted (variable depth)		H P	●	
Toggle extension		H A	●	
Mechanical interlock ⑨: Slide type		M S	●	
Mechanical interlock ⑨: Rear-connected type		M B	—	
Mechanical interlock ⑨: Link type		M L	●	
Mechanical interlock ⑨: Wire type		MW	●	
Toggle holder		H H	●	
Toggle lock		H L		
Terminal cover	For front-connected	C F	●	
	For rear-connected and plug-in	C R	●	
Terminal block for lead		T F	●	
Door flange		D F	●	
CE marking			Yes	
Overcurrent trip mechanism			Thermal-magnetic (adjustable)	
Colour of cover			Grey Blue	
Trip button (Colour)			Yes (Red)	
Suitability for isolation			Yes	
Reverse connection			Yes	

Notes:

◉ : Standard. This configuration used unless otherwise specified. ○ : Optional standard. Specify when ordering.
▲ : Semi-standard. ● : "yes" or "available". — : "no" or "not available".
① : DC is a special specification. When ordering, please specify DC.
⑨ : Mechanical interlocks cannot be applied to draw-out type (DR).
⑰ : See page 4-7 for the instantaneous trip value when using with DC.
㊿ : A safety trip function is provided.
㊶ : They cannot be applied to circuits with a short circuit breaking current exceeding 85kA.

Time/Current characteristic curves

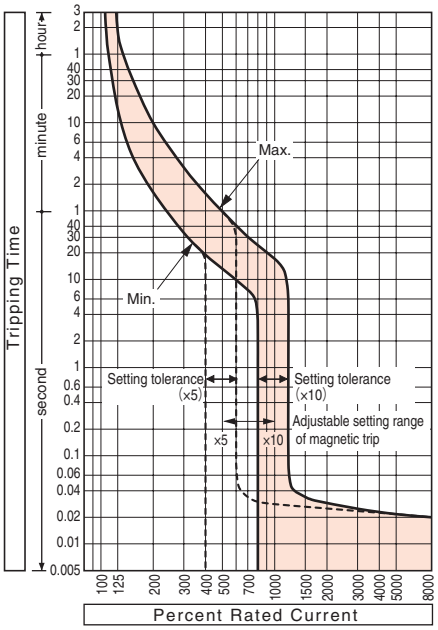

Ambient compensating curves

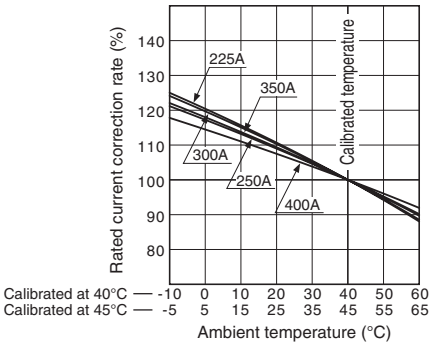

Magnetic trip pick-up current

Rated current (A)	Magnetic trip pick-up current (adjustable range) (A) I_n × 10	9	8	7	6	5
225	2250	2025	1800	1575	1350	1125
250	2500	2250	2000	1750	1500	1250
300	3000	2700	2400	2100	1800	1500
350	3500	3150	2800	2450	2100	1750
400	4000	3600	3200	2800	2400	2000

Note (1): Setting tolerance: ±20%.
Remarks:
(1): Unless otherwise stated when ordering, the selector dial is factory set to position "10".
(2): The trip pick-up current of DC models is not adjustable.

Combinations of Internally Mounted Accessories (Optional)

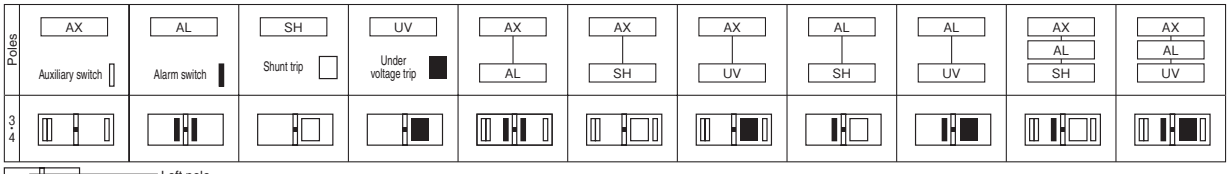

Note: For auxiliary switches or alarm switches, left-hand mounting has priority.

Outline dimensions (mm) PH400-CF

Front-connected

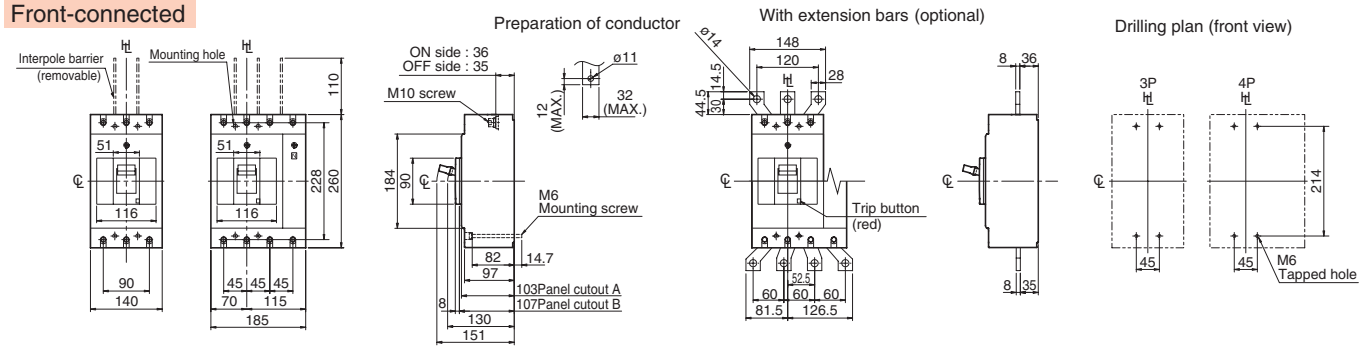

Rear-connected

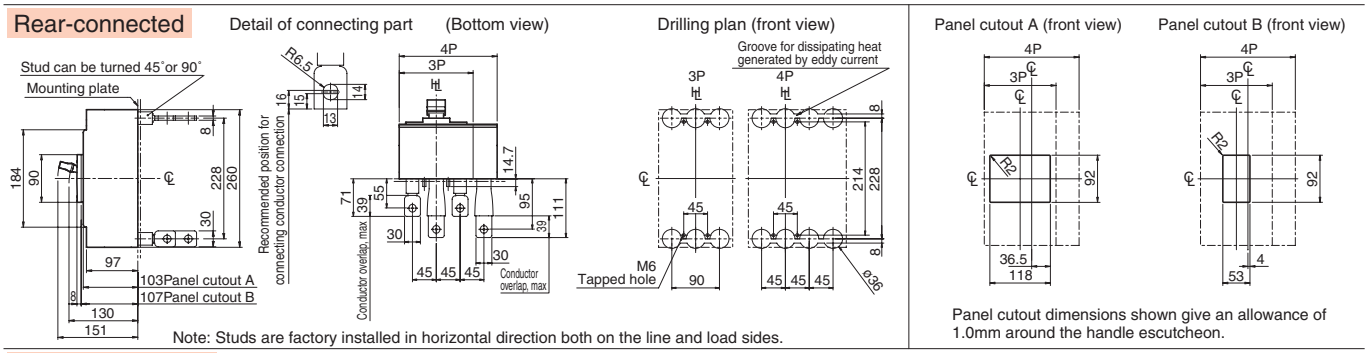

Note: Studs are factory installed in horizontal direction both on the line and load sides.

Panel cutout dimensions shown give an allowance of 1.0mm around the handle escutcheon.

Plug-in (Standard)

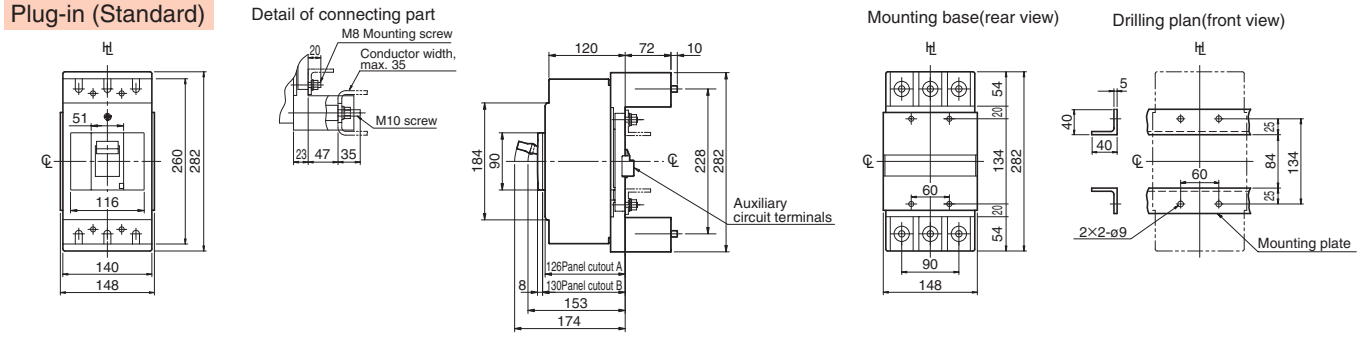

Plug-in (High-performance)

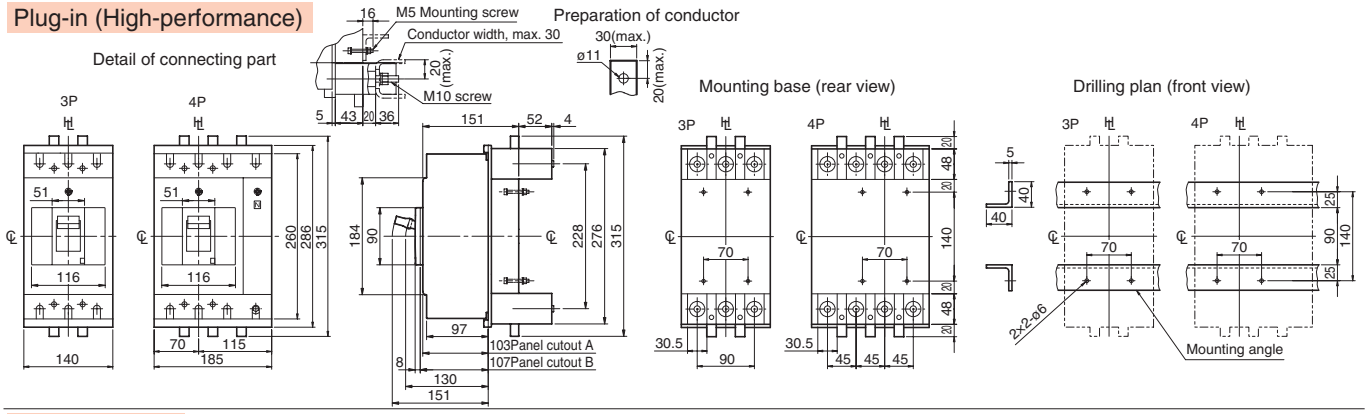

Flush-mounted

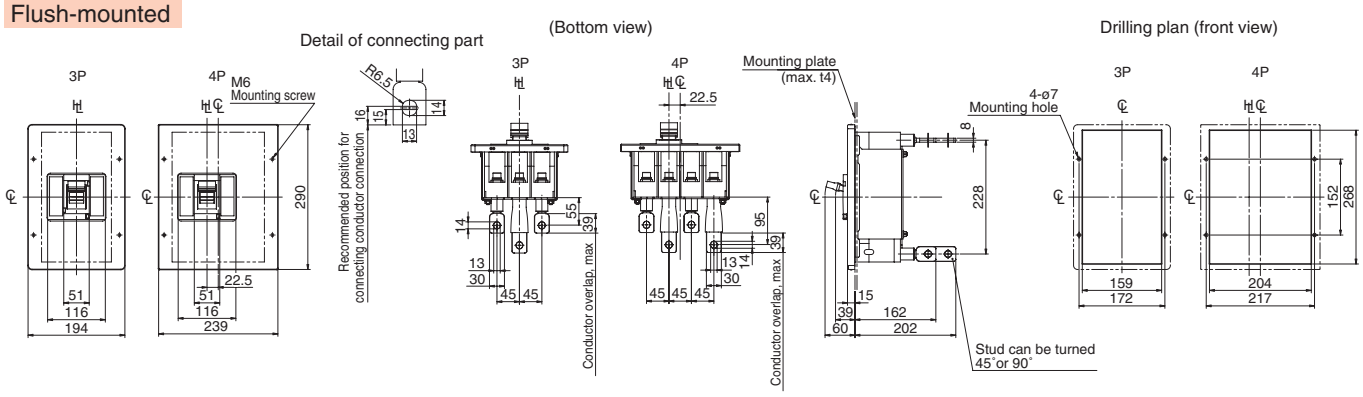

7 Characteristics and Outline Dimensions

TemBreak PRO

Moulded Case Circuit Breakers

PH400-CE

Ratings and Specifications

Frame size (A)			400	
Type			PH400-CE	
Number of poles			3	4
■ Ratings				
Rated current, A			Adjustable	
Calibrated at 40°C			I_n=250	I_n=400
45°C			125	175
⑧⓪			150	200
			175	225
			200	250
			225	300
			250	350
				400
Rated insulation voltage〔U_i〕 V			800	
Rated impulse withstand voltage〔U_{imp}〕 kV			8	
Rated short time withstand current 〔I_{cw}〕 kA			5 (0.4sec.)	
Utilization Category			B	
■ Rated breaking capacity, kA				
JIS C 8201-2-1 Ann.1 Ann.2	AC	690V	12/12	
IEC 60947-2		500V	65/65	
I_{cu}/I_{cs}(sym)		440V	100/100	
		415V	110/110	
		380V	110/110	
		240V	125/125	
	DC	250V	—	
		125V	—	
NK	AC	690V	12/12	
I_{cu}/I_{cs}(sym)		450V	100/100	
		240V	125/125	
	DC	250V	—	
Weight (◉ marked standard type) kg			5.7	7.5
■ Connections and Mountings				
Front-connected (FC)	Terminal screws		◉	
	With extension bars		○	
Rear-connected (RC)	Flat bar studs		○	
Plug-in (PM) For switchboards	High-performance (PMB)		○ ⑤⓪	
	Standard (PMC)		○	—
For distribution boards (PMD)			—	
Flush-mounted (FP)	With flat bar studs		○	
Draw-out type (DR)			▲	
TemPlug70 (PG)			▲ ⑧①	—
DIN rail mount			—	
■ Accessories (optional)		Symbol		
Externally mounted: Motor operator		M C	●	
External operating handle	Breaker-mounted	H B	●	
	Door-mounted (variable depth)	H P	●	
Toggle extension		H A	●	
Mechanical interlock ⑨	Slide type	M S	●	
	Rear-connected type	M B	—	
	Link type	M L	●	
	Wire type	M W	●	
Toggle holder		H H	●	
Toggle lock		H L		
Terminal cover	For front-connected	C F	●	
	For rear-connected and plug-in	C R	●	
Terminal block for lead		T F	●	
Door flange		D F	●	
CE marking			Yes	
Overcurrent trip mechanism			Electronic	
Colour of cover			Grey Blue	
Trip button (Colour)			Yes (Red)	
Suitability for isolation			Yes	
Reverse connection			Yes	

Notes:
◉ : Standard. This configuration used unless otherwise specified. ○ : Optional standard. Specify when ordering. ▲ : Semi-standard. ● : "yes" or "available". — : "no" or "not available". ⑨ : Mechanical interlocks cannot be applied to draw-out type (DR).
⑤⓪ : A safety trip function is provided. ⑧⓪ : If the ambient temperature exceeds 45°C, reduce the operating current in accordance with 2 Environmental operating conditions of the chapter 8. ⑧① : They cannot be applied to circuits with a short circuit breaking current exceeding 85kA.

Time/Current characteristic curves

• Long time/Short time trip characteristics

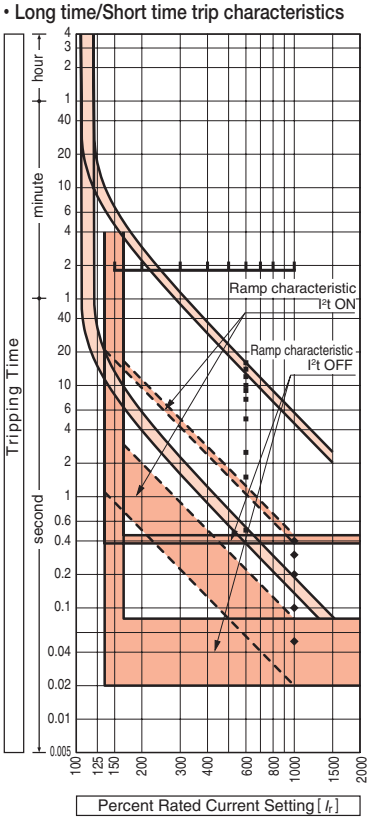

• Instantaneous trip characteristics

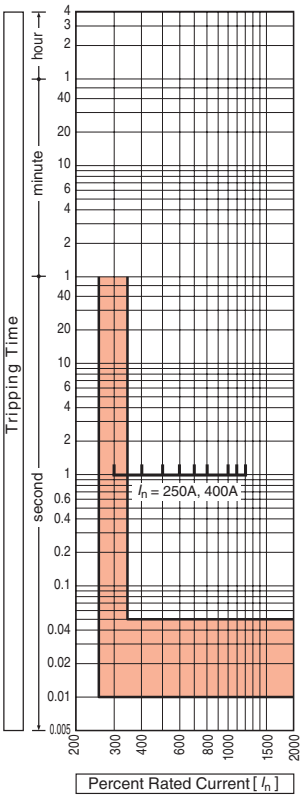

Note: See page 6-4 for Neutral protection, ground fault trip and preferential trip alarm characteristics.

Overcurrent tripping characteristics

TPOP OCR (LSIG) (I_n)=250A, 400A

Rated current settings (A) (I_r) = (I_r1)×(I_r2)	When (I_n)=250A (I_r1) (A)=125, 150, 175, 200, 225, 250 adjustable When (I_n)=400A (I_r1) (A)=175, 200, 225, 250, 300, 350, 400 adjustable
	(I_r2)=0.91, 0.92, 0.93, 0.94, 0.95, 0.96, 0.97, 0.98, 0.99, 1.00
Long time-delay time settings (s) : (t_r)	0.5, 1.5, 2.5, 5, 7.5, 9, 10, 12, 14, 16 adjustable at (I_r)×600%
	Time-delay setting tolerance –20% –20ms or more +0% +30ms or less
Short time-delay pick-up current (A) : (I_{sd})	(I_r)×1.5, 2, 3, 4, 5, 6, 7, 8, 10 or OFF
	Current setting tolerance within ±10%
Short time-delay time settings (ms) : (t_{sd})	50, 100, 200, 300, 400 adjustable
	Ramp characteristics I²t: ON or OFF However, definite time-delay characteristics with (I_r)×10 or more
	When (t_{sd})=50ms Time-delay setting tolerance –30ms or more +30ms or less When (t_{sd})=100ms to 400ms Time-delay setting tolerance –20ms or more +50ms or less
Instantaneous trip pick-up current (A) : (I_i)	(I_n)×3, 4, 5, 6, 7, 8, 10, 11, 12 adjustable
	Current setting tolerance within ±15%
Neutral protection pick-up current (A) : (I_N)	For 3P OFF fixed
	For 4P (I_r)×50%, 100% or OFF
Neutral protection time settings (s) : (t_N)	Operates with long time-delay time setting (t_r) and short time-delay time setting (t_{sd}) and also operates with instantaneous trip
Ground fault trip pick-up current (A) : (I_g)	3P for 3ø3W, 4P for 3ø4W (3P 3ø4W not supported) or OFF (I_n)×20% Current setting tolerance within ±10%
Ground fault trip time settings (ms) : (t_g)	200 Time-delay setting tolerance –20ms or more +50ms or less
Preferential trip alarm pick-up current (A) : (I_p)	(I_r)×80% Current setting tolerance within ±10%
Preferential trip alarm time settings (s) : (t_p)	(t_r)×50% Time-delay setting tolerance –20% –20ms or more +0% +30ms or less

Notes:
1: If not otherwise specified, the product will be delivered with the underlined standard setting values.
2: The TPOT type OCR (LSI) only has long time-delay trip, short time-delay trip, instantaneous trip, and preferential trip alarm.

Combinations of Internally Mounted Accessories (Optional)

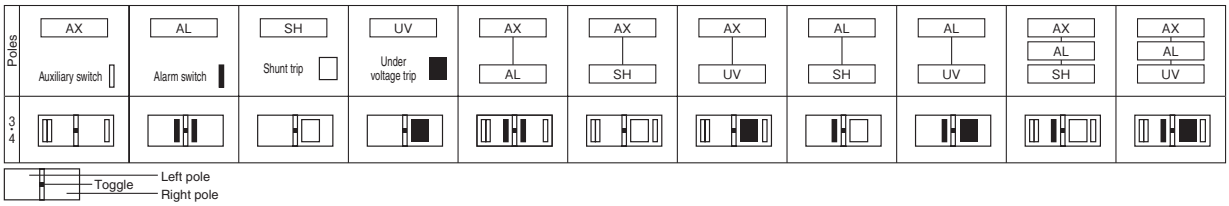

Outline dimensions (mm) PH400-CE

Front-connected

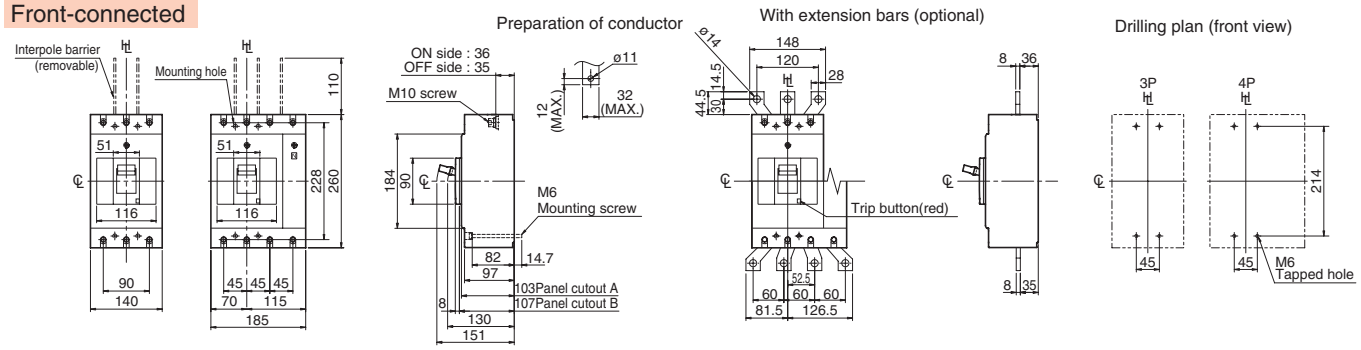

Rear-connected

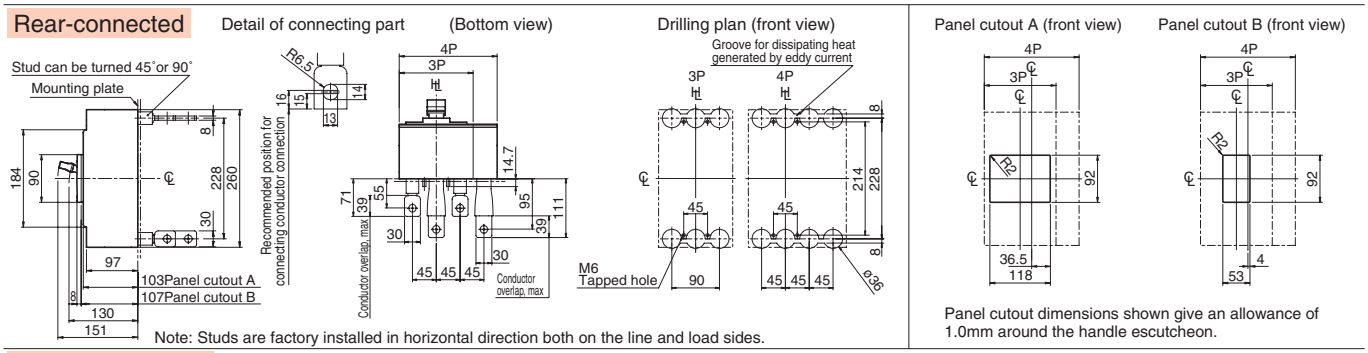

Note: Studs are factory installed in horizontal direction both on the line and load sides.

Panel cutout dimensions shown give an allowance of 1.0mm around the handle escutcheon.

Plug-in (Standard)

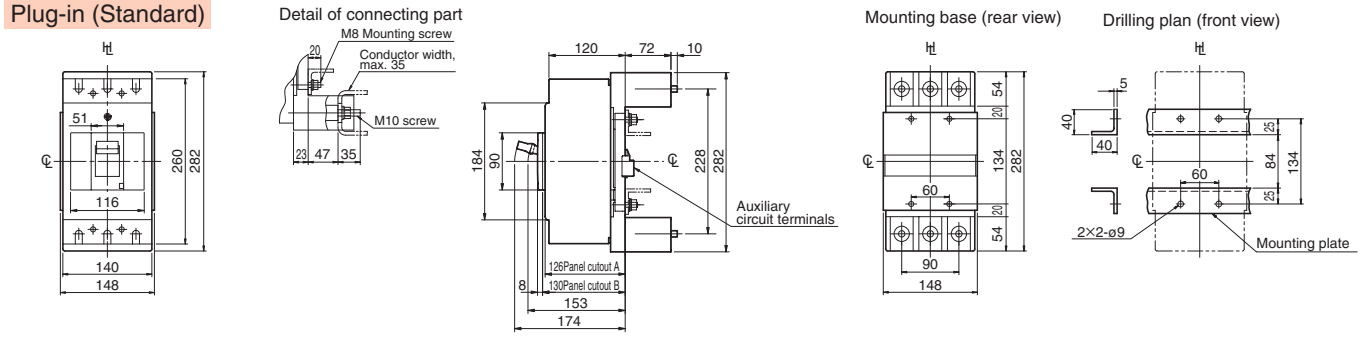

Plug-in (High-performance)

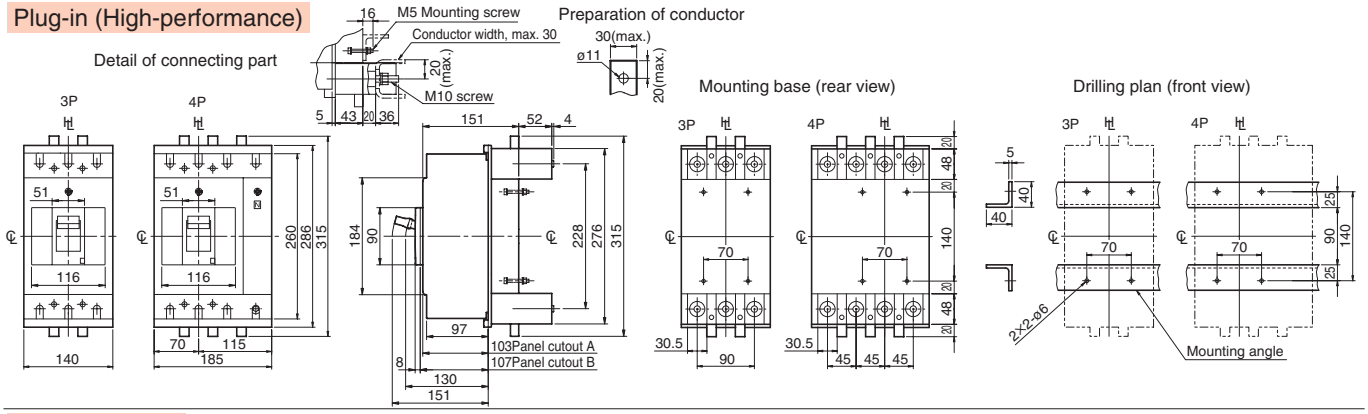

Flush-mounted

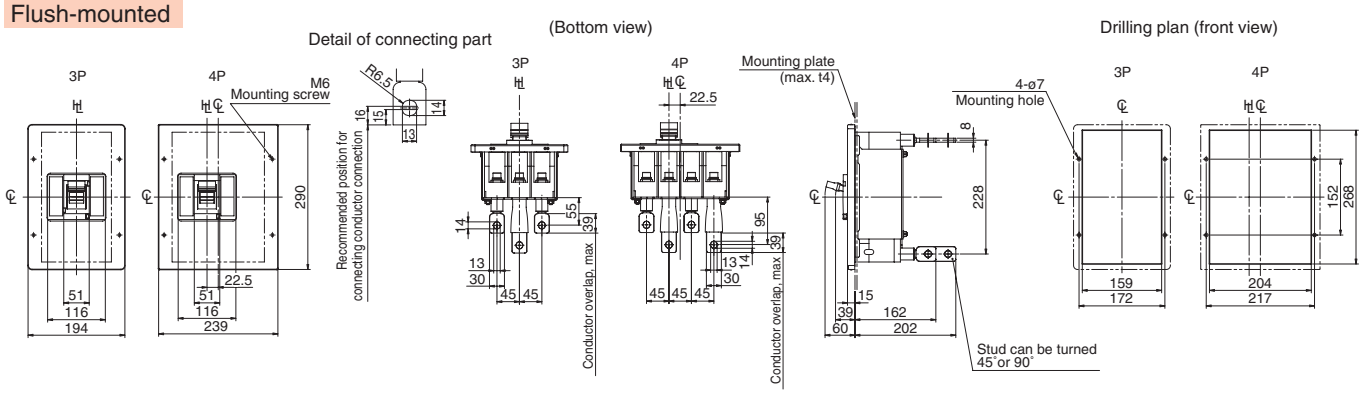

7 Characteristics and Outline Dimensions TemBreak PRO

Moulded Case Circuit Breakers

H400-NE, L400-NE

Ratings and Specifications

Frame size (A)			400		400			
Type			H400-NE		L400-NE			
Number of poles			3	4	3	4		
■Ratings								
Rated current, A			Adjustable		Adjustable			
Calibrated at 40°C			I_{CT}=250	I_{CT}=400	I_{CT}=250	I_{CT}=400		
45°C			125	175 350	125	175 350		
⑱			150	200 400	150	200 400		
			175	225	175	225		
			200	250	200	250		
			225	300	225	300		
Rated insulation voltage〔U_i〕 V			690		690			
Rated impulse withstand voltage〔U_{imp}〕 kV			8		8			
Rated short time withstand current 〔I_{cw}〕 kA			5 (0.3sec.)		5 (0.3sec.)			
Utilization Category			B		B			
■Rated breaking capacity, kA								
JIS C 8201-2-1 Ann.1 Ann.2	AC	690V	35/35		50/50			
IEC 60947-2		500V	45/45		65/65			
I_{cu}/I_{cs}(sym)		440V	120/80		180/135			
		415V	125/85		200/150			
		380V	125/85		200/150			
		240V	150/150		200/150			
	DC	250V	—		—			
		125V	—		—			
NK	AC	690V	35/35		50/50			
I_{cu}/I_{cs}(sym)		450V	120/80		180/135			
		240V	150/150		200/150 ㉛			
	DC	250V	—		—			
Weight (◉ marked standard type) kg			7.1	9.4	7.1	9.4		
■Connections and Mountings								
Front-connected (FC)	Terminal screws		◉		◉			
	With extension bars		○		○			
Rear-connected (RC)	Flat bar studs		○		○			
Plug-in (PM) For switchboards	High-performance (PMB)		○ ㊺		○ ㊺			
	Standard (PMC)		○	—	○	—		
For distribution boards (PMD)			—		—			
Flush-mounted (FP)	With flat bar studs		○		○			
Draw-out type (DR)			—		—			
TemPlug70 (PG)			—		—			
DIN rail mount			—		—			
■Accessories (optional)		Symbol						
Externally mounted: Motor operator		M C	●		●			
External operating handle	Breaker-mounted	H B	●		●			
	Door-mounted (variable depth)	H P	●		●			
Toggle extension		H A	●		●			
Mechanical interlock	Slide type	M S	●		●			
	Rear-connected type	M B	—		—			
	Link type	M L	●		●			
	Wire type	M W	●		●			
Toggle holder		H H	●		●			
Toggle lock		H L						
Terminal cover	For front-connected	C F	●		●			
	For rear-connected and plug-in	C R	●		●			
Terminal block for lead		T F	●		●			
Door flange		D F	●		●			
CE marking			Yes		Yes			
Overcurrent trip mechanism			Electronic ⑯		Electronic ⑯			
Colour of cover			Grey Blue		Grey Blue			
Trip button (Colour)			Yes (Red)		Yes (Red)			
Suitability for isolation			Yes		Yes			
Reverse connection			Yes		Yes			

Notes:

◉ : Standard. This configuration used unless otherwise specified. ○ : Optional standard. Specify when ordering.

▲ : Semi-standard. ● : "yes" or "available". — : "no" or "not available"

⑯ : Optional preferential alarm or ground fault trip function available on request.

㉛ : Also applicable to 415V AC. ㊺ : A safety lock function is provided.

⑱ : If the ambient temperature exceeds 45° C, reduce the operating current in accordance with 2 Environmental operating conditions of the chapter 8.

Time/Current characteristic curves

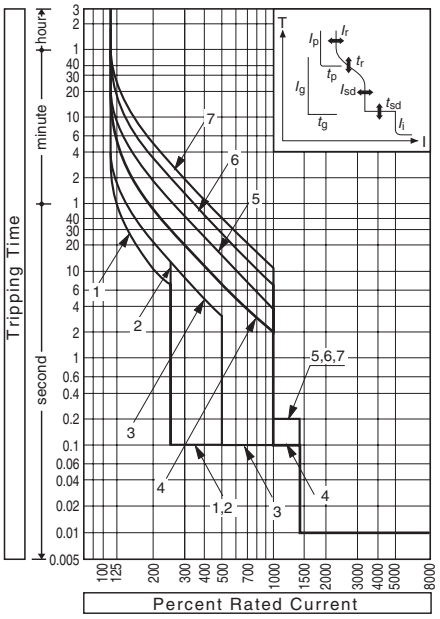

Overcurrent tripping characteristics

Characteristics No.		1	2	3	4	5	6	7
Rated current settings (A) : (I_r)		CT rated current : (I_{CT}) = 250A 125, 150, 175, 200, 225						
		CT rated current : (I_{CT}) = 400A 175, 200, 225, 250, 300, 350, 400						
Long time-delay time settings (s) : (t_r)		11	21	21	5	10	19	29
		at (I_r)×200%			at (I_r)×600%			
		Setting tolerance ±20%						
Short time-delay pick-up current (A) : (I_{sd})	(I_r)×	2.5	2.5	5	10	10	10	10
		Setting tolerance ±15%						
Short time-delay time settings (s) : (t_{sd})		0.1	0.1	0.1	0.1	0.2	0.2	0.2
		Total clearing time +50ms, resettable time –20ms						
Instantaneous trip pick-up current (A) : (I_i)		(I_r)×1400% Max. (I_{CT})×1300% Setting tolerance ±20%						
Option: Preferential trip alarm	Pick-up current (A) : (I_p)	(I_r)×80% Setting tolerance ±10%						
	Time settings (s) : (t_p)	Definite time-delay characteristic, 40sec. Setting tolerance ±10%						
Ground falut trip	Pick-up current (A) : (I_g)	(I_{CT})×20% Setting tolerance ±15% ①						
	Time settings (s) : (t_g)	Definite time-delay characteristic, 0.2sec. Total tripping time +50ms, resettable time –20ms.						
Neutral protection	Pick-up current (A) : (I_N)	(I_r)×100% or 50% selectable ②						
	Time settings (s) : (t_N)	(t_N)=(t_r) Same as Long time-delay time settings						

Note ①: When (I_{CT})=250A, ground fault trip cannot be used.

Note ②: When (I_r) < (I_{CT}), the pick-up current tolerance becomes large when (I_N)=(I_r)×50% is set.

Remark: Characteristic No.4 will be applied as standard setting unless otherwise specified.

Combinations of Internally Mounted Accessories (Optional)

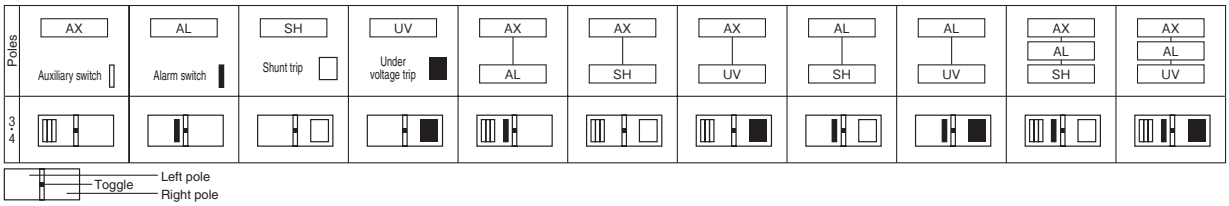

Outline dimensions (mm) — H400-NE, L400-NE

Front-connected

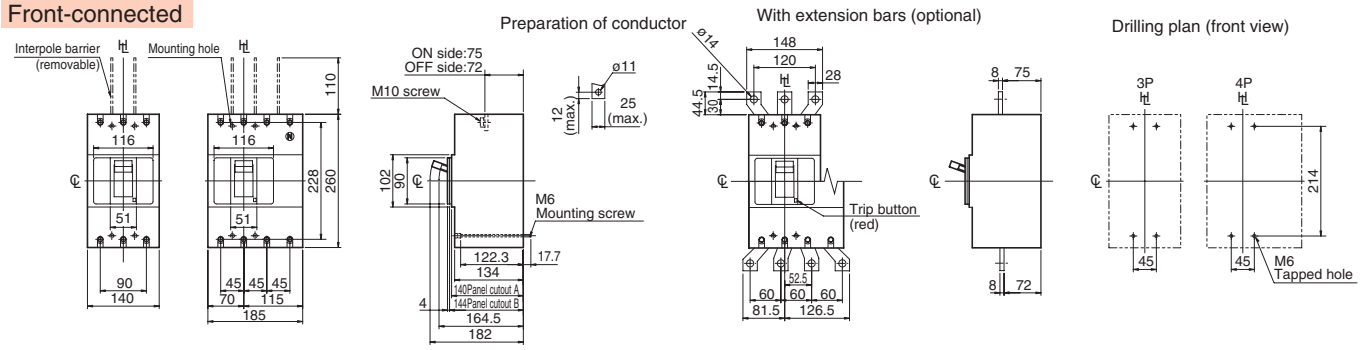

Rear-connected

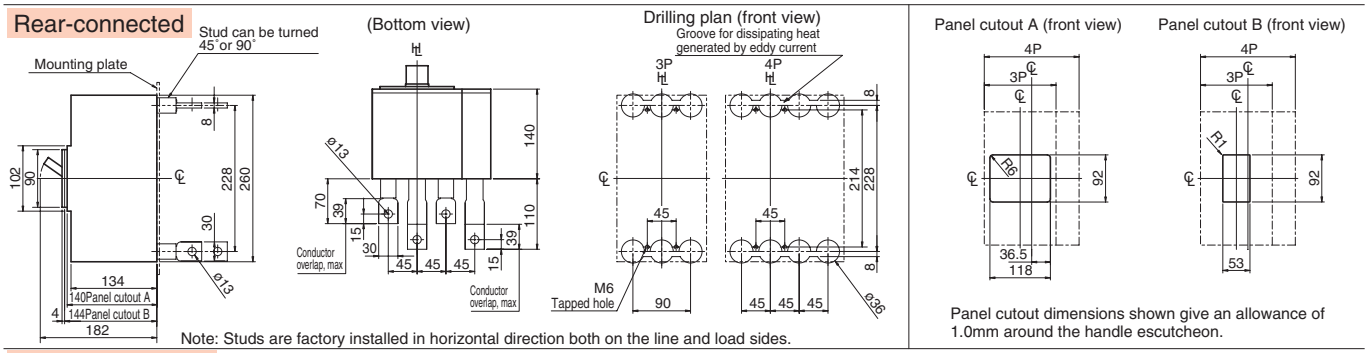

Note: Studs are factory installed in horizontal direction both on the line and load sides.

Panel cutout dimensions shown give an allowance of 1.0mm around the handle escutcheon.

Plug-in (Standard)

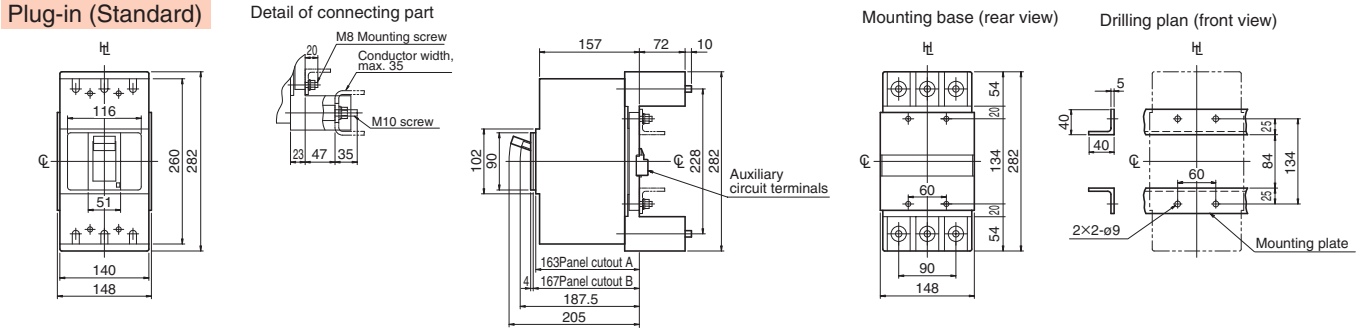

Plug-in (High-performance)

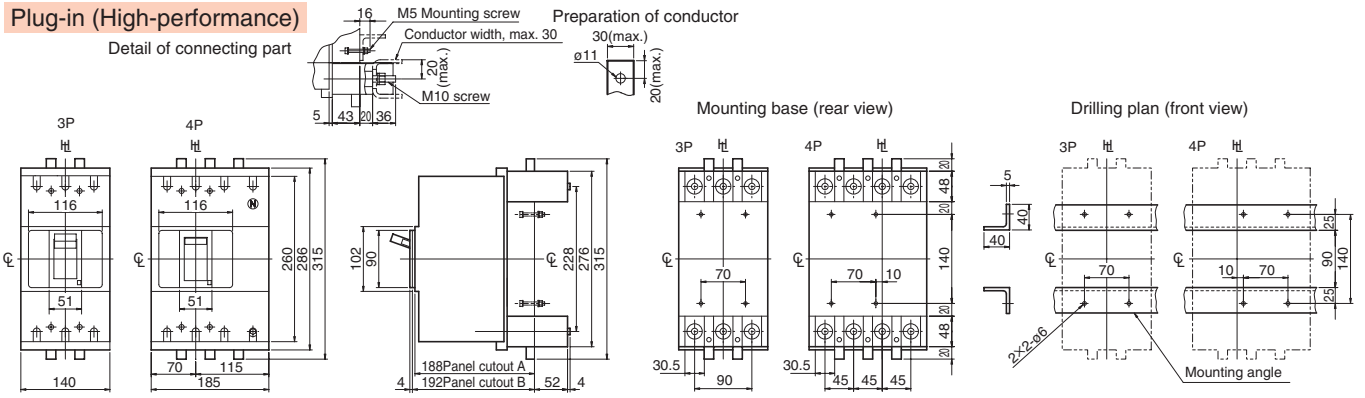

Flush-mounted

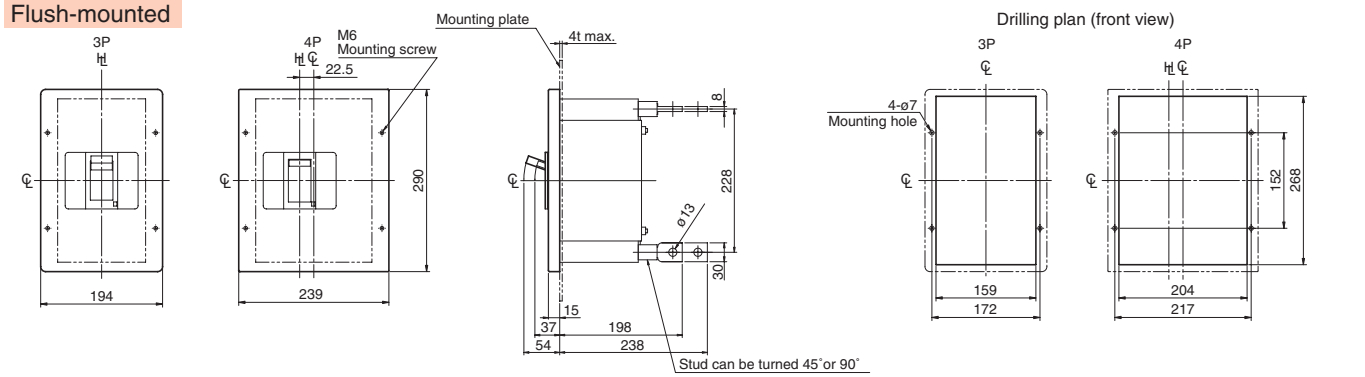

Note: Studs are factory installed in horizontal direction both on the line and load sides.

7 Characteristics and Outline Dimensions TemBreak PRO

Moulded Case Circuit Breakers

S630-CF, S630-NF

Ratings and Specifications

Frame size (A)			600		630		600		630	
Type			S630-CF				S630-NF			
Number of poles			3	4	3	4	3	4	3	4
■ Ratings										
Rated current, A			500		630		500		630	
Calibrated at 40°C			600				600			
45°C										
Rated insulation voltage〔U_i〕 V			690		690		690		690	
Rated impulse withstand voltage〔U_{imp}〕 kV			8		8		8		8	
Rated short time withstand current 〔I_{cw}〕 kA			—		—		—		—	
Utilization Category			A		A		A		A	
■ Rated breaking capacity, kA										
JIS C 8201-2-1 Ann.1 Ann.2	AC	690V	10/10		10/10		20/20		20/20	
IEC 60947-2		500V	15/15		15/15		30/30		30/30	
I_{cu}/I_{cs}(sym)		440V	30/30		30/30		50/50		50/50	
		415V	36/36		36/36		50/50		50/50	
		380V	36/36		36/36		50/50		50/50	
		240V	50/50		50/50		85/85		85/85	
	① DC	250V	50/50		50/50		50/50		50/50	
		125V	50/50		50/50		50/50		50/50	
NK	AC	690V	10/10		10/10		20/20		20/20	
I_{cu}/I_{cs}(sym)		450V	30/30		30/30		50/50		50/50	
		240V	50/50		50/50		85/85		85/85	
	① DC	250V	—		—		—		—	
Weight (◉ marked standard type) kg			8.0	11.0	8.0	11.0	8.0	11.0	8.0	11.0
■ Connections and Mountings										
Front-connected (FC)	Terminal screws		—		—		—		—	
	With extension bars		◉		◉		◉		◉	
Rear-connected (RC)	Flat bar studs		○		○		○		○	
Plug-in (PM) For switchboards	High-performance (PMB)		○ ⑤1		○ ⑤1		○ ⑤1		○ ⑤1	
	Standard (PMC)		○	—	○	—	○	—	○	—
For distribution boards (PMD)			—		—		—		—	
Flush-mounted (FP)	With flat bar studs		○		○		○		○	
Draw-out type (DR)			▲		▲		▲		▲	
TemPlug70 (PG)			○	—	○	—	○	—	○	—
DIN rail mount			—		—		—		—	
■ Accessories (optional)		Symbol								
Externally mounted: Motor operator		M C	●		●		●		●	
External operating handle	Breaker-mounted	H B	●		●		●		●	
	Door-mounted (variable depth)	H P	●		●		●		●	
Toggle extension		H A	●		●		●		●	
Mechanical interlock ⑨	Slide type	M S	●		●		●		●	
	Rear-connected type	M B	—		—		—		—	
	Link type	M L	●		●		●		●	
	Wire type	M W	●		●		●		●	
Toggle holder		H H	●		●		●		●	
Toggle lock		H L								
Terminal cover	For front-connected	C F	●		●		●		●	
	For rear-connected and plug-in	C R	●		●		●		●	
Terminal block for lead		T F	●		●		●		●	
Door flange		D F	●		●		●		●	
CE marking			Yes		Yes		Yes		Yes	
Overcurrent trip mechanism			Thermal-magnetic (adjustable)		Thermal-magnetic (adjustable)		Thermal-magnetic (adjustable)		Thermal-magnetic (adjustable)	
Colour of cover			Grey Blue		Grey Blue		Grey Blue		Grey Blue	
Trip button (Colour)			Yes (Red)		Yes (Red)		Yes (Red)		Yes (Red)	
Suitability for isolation			Yes		Yes		Yes		Yes	
Reverse connection			Yes		Yes		Yes		Yes	

Notes:

◉ : Standard. This configuration used unless otherwise specified. ○ : Optional standard. Specify when ordering.
▲ : Semi-standard. ● : "yes" or "available". — : "no" or "not available".
① : DC is a special specification. When ordering, please specify DC.
⑨ : Mechanical interlocks cannot be applied to draw-out type (DR).
⑤1 : A safety lock function is provided.

Time/Current characteristic curves

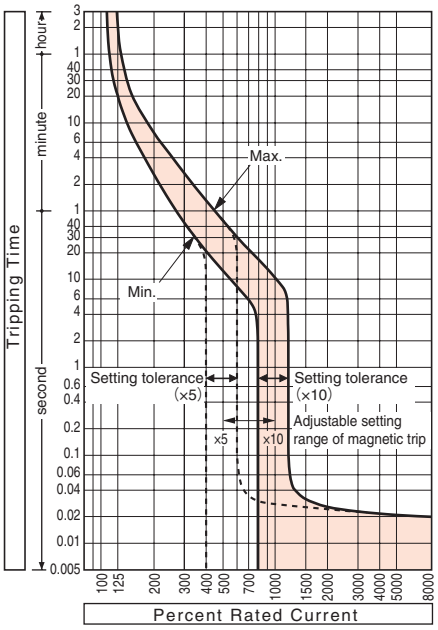

Ambient compensating curves

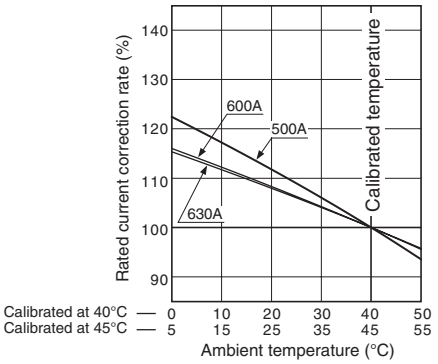

Magnetic trip pick-up current

Rated current (A)	Magnetic trip pick-up current (adjustable range) (A) I_n× 10	9	8	7	6	5
500	5000	4500	4000	3500	3000	2500
600	6000	5400	4800	4200	3600	3000
630	6300	5670	5040	4410	3780	3150

Note (1): Setting tolerance: ±20%.
Remarks:
(1): Unless otherwise stated when ordering, the selector dial is factory set to position "10".
(2): The trip pick-up current of DC models is not adjustable; the dial position corresponding to the trip pick-up current is marked with a white point.

Combinations of Internally Mounted Accessories (Optional)

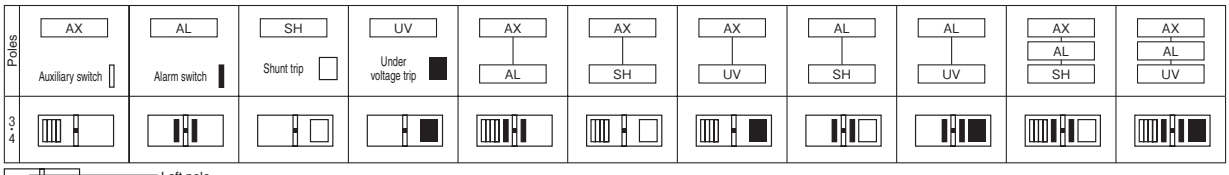

Note: For auxiliary switches or alarm switches, left-hand mounting has priority.

Outline dimensions (mm) S630-CF, S630-NF

Front-connected

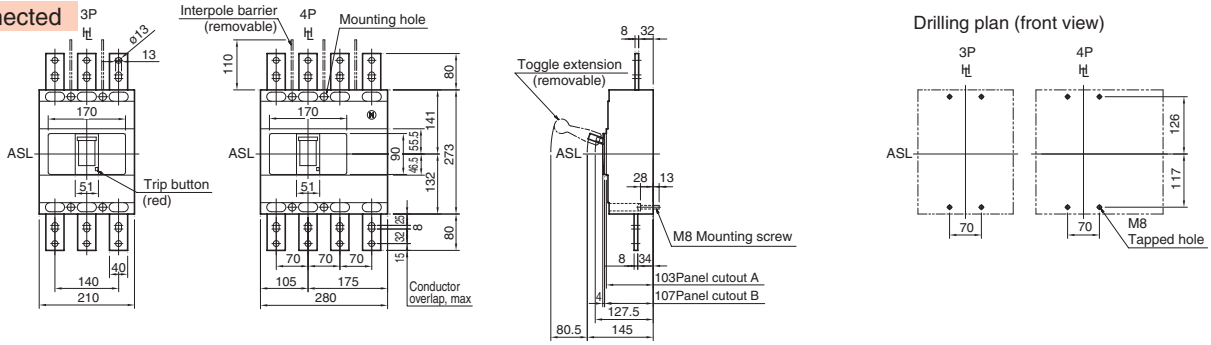

Rear-connected

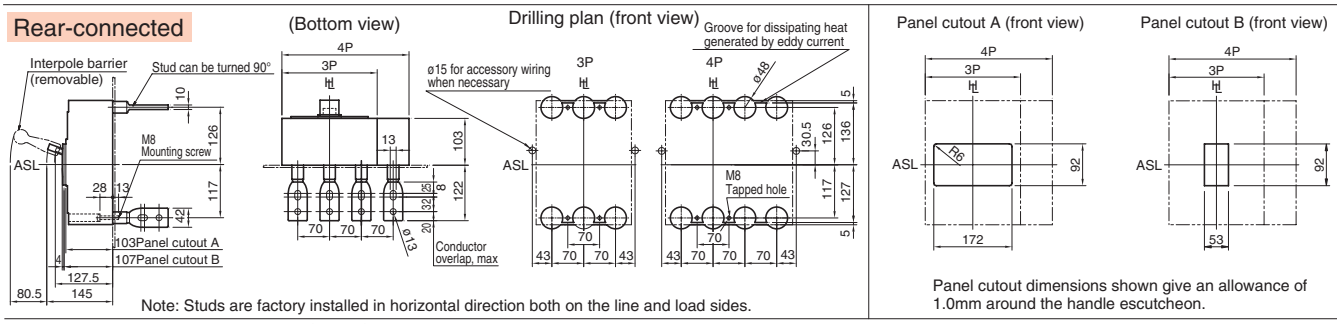

Note: Studs are factory installed in horizontal direction both on the line and load sides.

Panel cutout dimensions shown give an allowance of 1.0mm around the handle escutcheon.

Plug-in (Standard)

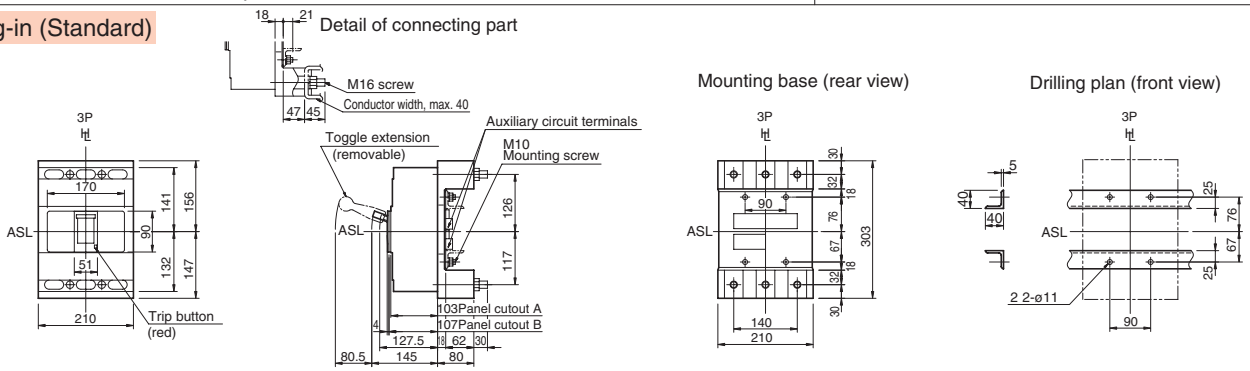

Plug-in (High-performance)

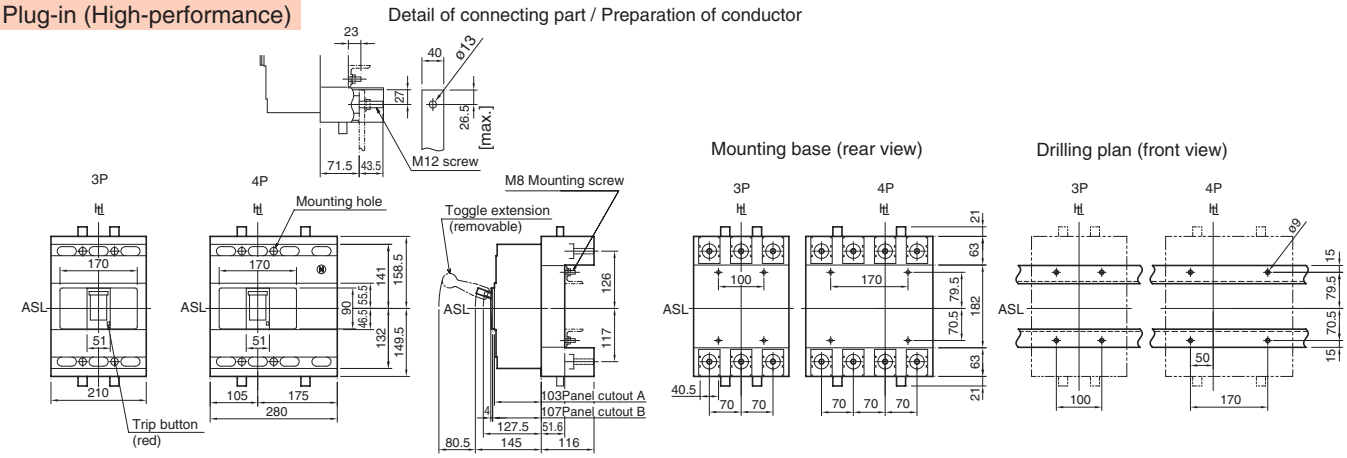

Flush-mounted

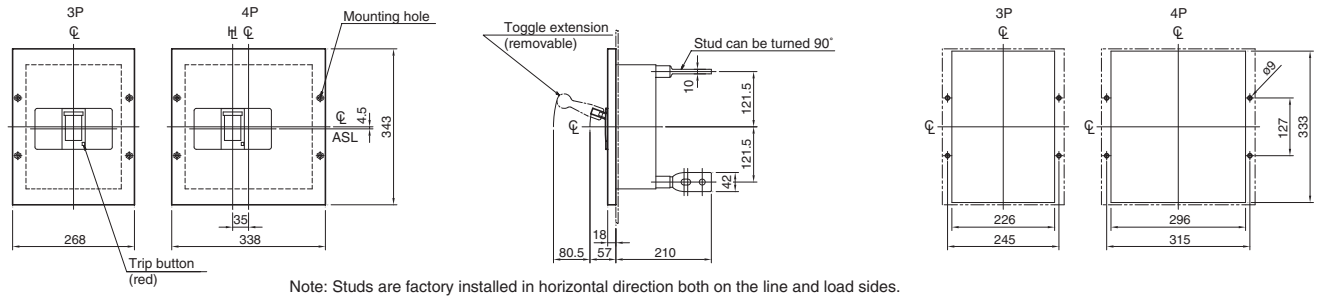

Note: Studs are factory installed in horizontal direction both on the line and load sides.

7 Characteristics and Outline Dimensions TemBreak PRO

Moulded Case Circuit Breakers

S630-NE

Ratings and Specifications

Frame size (A)			630				
Type			**S630-NE**				
Number of poles			3	4			
■ Ratings							
Rated current, A			Adjustable				
Calibrated at 40°C			I_{CT}=630				
45°C			250	500			
⑱			300	600			
			350	630			
			400				
Rated insulation voltage〔U_i〕 V			690				
Rated impulse withstand voltage〔U_{imp}〕 kV			8				
Rated short time withstand current 〔I_{cw}〕 kA			10(0.3sec.)				
Utilization Category			B				
■ Rated breaking capacity, kA							
JIS C 8201-2-1 Ann.1 Ann.2	AC	690V	20/20				
IEC 60947-2		500V	30/30				
I_{cu}/I_{cs}(sym)		440V	50/50				
		415V	50/50				
		380V	50/50				
		240V	85/85				
	DC	250V	—				
		125V	—				
NK	AC	690V	20/20				
I_{cu}/I_{cs}(sym)		450V	50/50				
		240V	85/85				
	DC	250V	—				
Weight (◉ marked standard type) kg			8.7	11.9			
■ Connections and Mountings							
Front-connected (FC)	Terminal screws		—				
	With extension bars		◉				
Rear-connected (RC)	Flat bar studs		○				
Plug-in (PM) For switchboards	High-performance (PMB)		○ ⑤⑪				
	Standard (PMC)		○	—			
For distribution boards (PMD)			—				
Flush-mounted (FP)	With flat bar studs		○				
Draw-out type (DR)			▲				
TemPlug70 (PG)			○	—			
DIN rail mount			—				
■ Accessories (optional)		Symbol					
Externally mounted: Motor operator		M C	●				
External operating handle	Breaker-mounted	H B	●				
	Door-mounted (variable depth)	H P	●				
Toggle extension		H A	●				
Mechanical interlock ⑨	Slide type	M S	●				
	Rear-connected type	M B	—				
	Link type	M L	●				
	Wire type	MW	●				
Toggle holder		H H	●				
Toggle lock		H L					
Terminal cover	For front-connected	C F	●				
	For rear-connected and plug-in	C R	●				
Terminal block for lead		T F	●				
Door flange		D F	●				
CE marking			Yes				
Overcurrent trip mechanism			Electronic ⑯				
Colour of cover			Grey Blue				
Trip button (Colour)			Yes (Red)				
Suitability for isolation			Yes				
Reverse connection			Yes				

Notes:

◉ : Standard. This configuration used unless otherwise specified. ○ : Optional standard. Specify when ordering.

▲ : Semi-standard. ● : "yes" or "available". — : "no" or "not available".

⑨ : Mechanical interlocks cannot be applied to draw-out type (DR).

⑯ : Optional preferential alarm or ground fault trip function available on request. ⑤⑪ : A safety lock function is provided.

⑱ : If the ambient temperature exceeds 45° C, reduce the operating current in accordance with 2 Environmental operating conditions of the chapter 8.

Time/Current characteristic curves

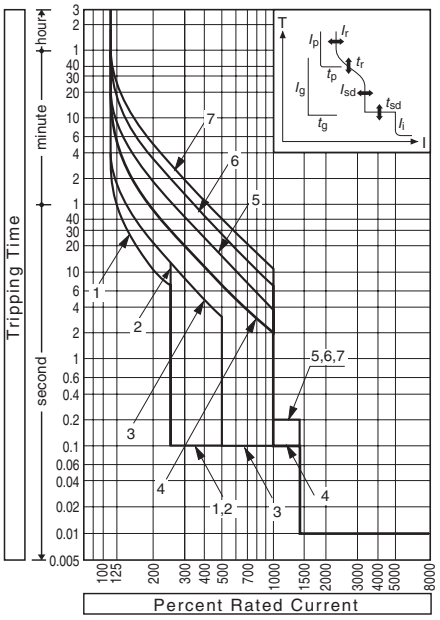

Overcurrent tripping characteristics

Characteristics No.	1	2	3	4	5	6	7
Rated current settings (A) : (I_r)	CT rated current : (I_{CT}) = 630A 250, 300, 350, 400, 500, 600, 630						
Long time-delay time settings (s) : (t_r)	11	21	21	5	10	19	29
	at (I_r)×200%			at (I_r)×600%			
	Setting tolerance ±20%						
Short time-delay pick-up current (A) : (I_{sd})	(I_r)× 2.5	2.5	5	10	10	10	10
	Setting tolerance ±15%						
Short time-delay time settings (s) : (t_{sd})	0.1	0.1	0.1	0.1	0.2	0.2	0.2
	Total clearing time +50ms, resettable time –20ms						
Instantaneous trip pick-up current (A) : (I_i)	(I_r)×1400% Max. (I_{CT})×1200% Setting tolerance ±20%						
Option: Preferential trip alarm							
Pick-up current (A) : (I_p)	(I_r)×80% Setting tolerance ±10%						
Time settings (s) : (t_p)	Definite time-delay characteristic, 40sec. Setting tolerance ±10%						
Ground falut trip							
Pick-up current (A) : (I_g)	(I_{CT})×20% Setting tolerance ±15%						
Time settings (s) : (t_g)	Definite time-delay characteristic, 0.2sec. Total tripping time +50ms, resettable time –20ms.						
Neutral protection							
Pick-up current (A) : (I_N)	(I_r)×100% or 50% selectable ②						
Time settings (s) : (t_N)	(t_N)=(t_r) Same as Long time-delay time settings						

Remark: Characteristic No.4 will be applied as standard setting unless otherwise specified.

Note ②: When (I_r) < (I_{CT}), the pick-up current tolerance becomes large when (I_N)=(I_r)×50% is set.

Combinations of Internally Mounted Accessories (Optional)

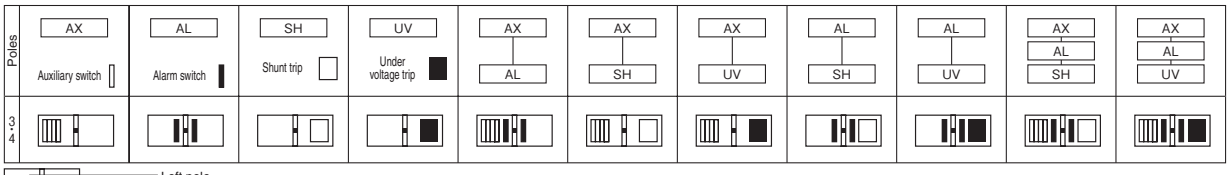

Note: For auxiliary switches or alarm switches, left-hand mounting has priority.

Outline dimensions (mm) S630-NE

Front-connected

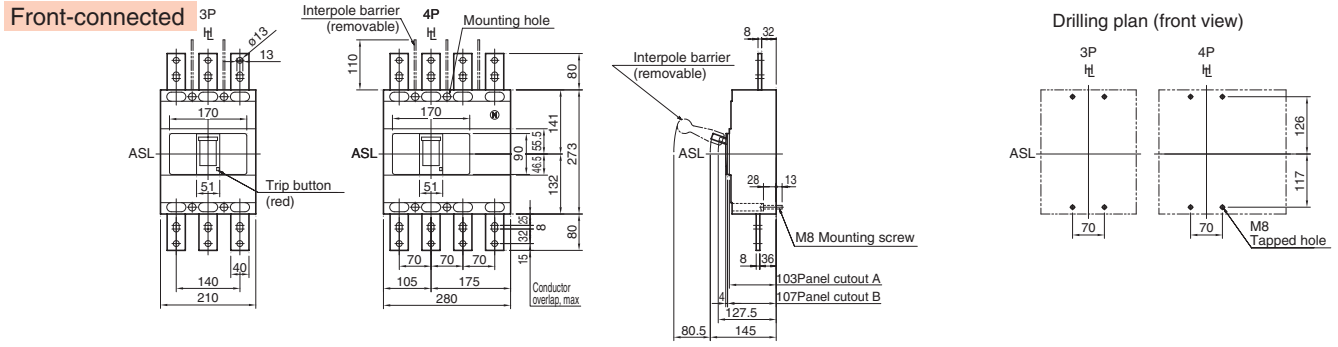

Rear-connected

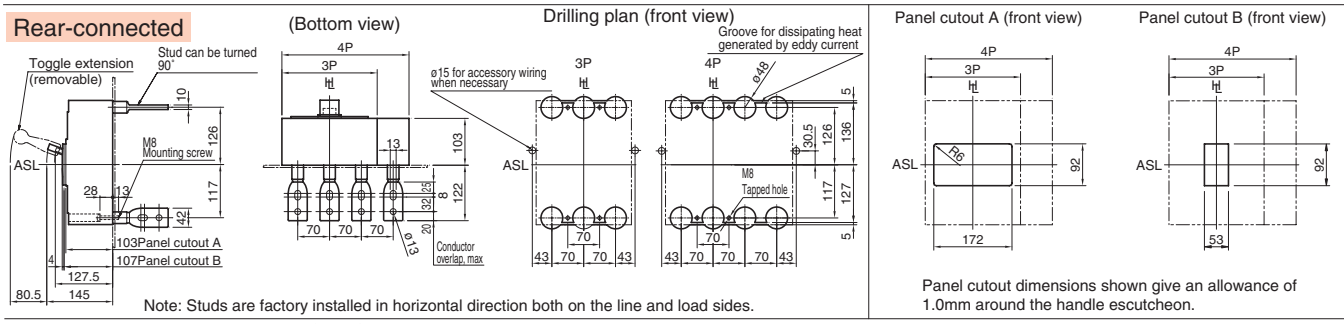

Note: Studs are factory installed in horizontal direction both on the line and load sides.

Panel cutout dimensions shown give an allowance of 1.0mm around the handle escutcheon.

Plug-in (Standard)

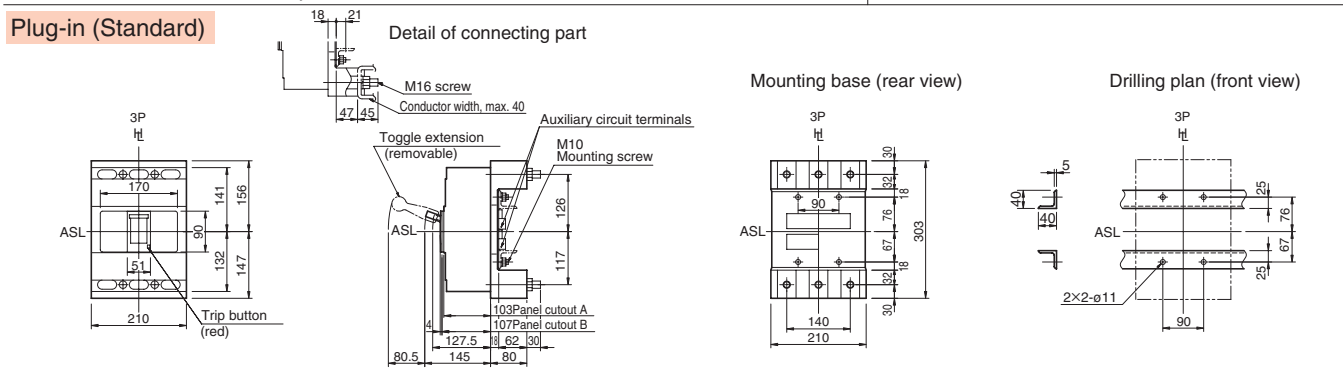

Plug-in (High-performance)

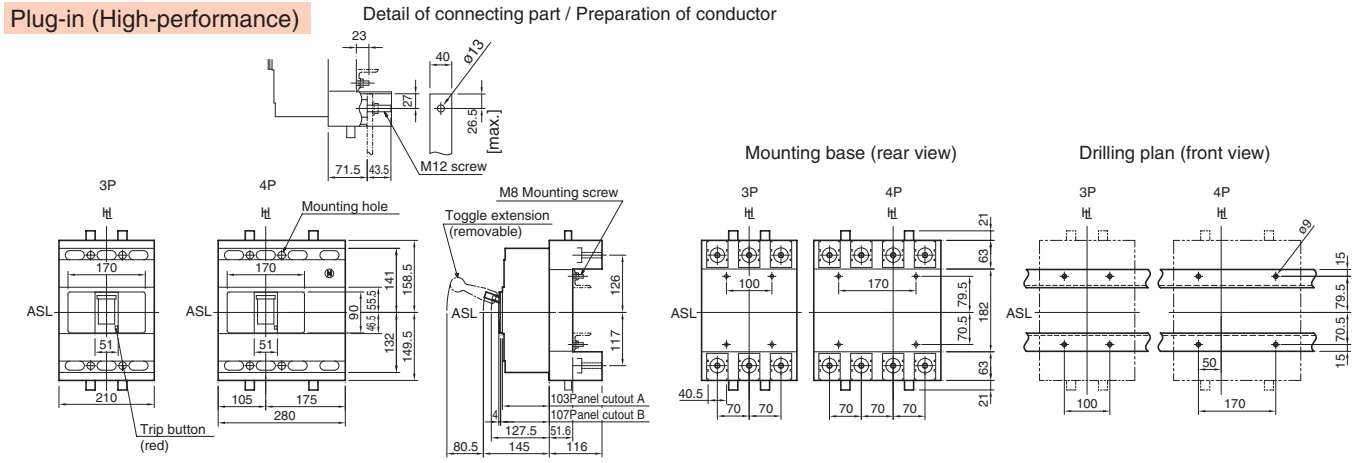

Flush-mounted

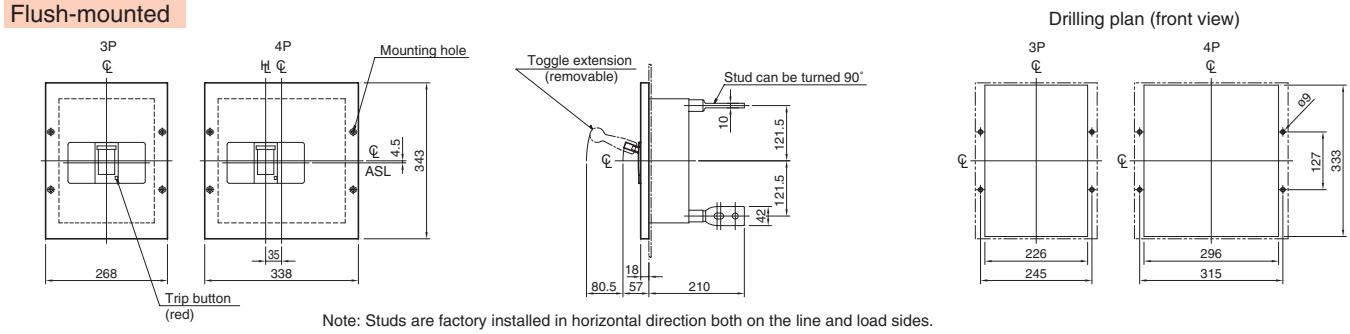

Note: Studs are factory installed in horizontal direction both on the line and load sides.

7 Characteristics and Outline Dimensions TemBreak PRO

Moulded Case Circuit Breakers

PS630-CF, PS630-NF, PS630-GF

Ratings and Specifications

Frame size (A)			600		600		600		
Type			PS630-CF		PS630-NF		PS630-GF		
Number of poles			3	4	3	4	3	4	
■ Ratings									
Rated current, A			500		500		500		
Calibrated at 40°C			600		600		600		
45°C			⑱		⑱		⑱		
Rated insulation voltage〔U_i〕 V			800		800		800		
Rated impulse withstand voltage〔U_{imp}〕 kV			8		8		8		
Rated short time withstand current 〔I_{cw}〕 kA			—		—		—		
Utilization Category			A		A		A		
■ Rated breaking capacity, kA									
JIS C 8201-2-1 Ann.1 Ann.2	AC	690V	7/7		12/12		12/12		
IEC 60947-2		500V	25/25		30/30		50/50		
I_{cu}/I_{cs}(sym)		440V	30/30		45/45		65/65		
		415V	36/36		50/50		70/70		
		380V	36/36		50/50		70/70		
		240V	50/50		85/85		100/100		
	① DC	250V	25/25 ⑰		50/50 ⑰		50/50 ⑰		
		125V	40/40 ⑰		50/50 ⑰		50/50 ⑰		
NK	AC	690V	7/7		12/12		12/12		
I_{cu}/I_{cs}(sym)		450V	30/30		45/45		65/65		
		240V	50/50		85/85		100/100		
	① DC	250V	—		—		—		
Weight (◉ marked standard type) kg			5.9	7.8	5.9	7.8	5.9	7.8	
■ Connections and Mountings									
Front-connected (FC)	Terminal screws		—		—		—		
	With extension bars		◉		◉		◉		
Rear-connected (RC)	Flat bar studs		○		○		○		
Plug-in (PM) For switchboards	High-performance (PMB)		○ ⑤⓪		○ ⑤⓪		○ ⑤⓪		
	Standard (PMC)		○	—	○	—	○	—	
For distribution boards (PMD)			—		—		—		
lush-mounted (FP)	With flat bar studs		○		○		○		
Draw-out type (DR)			▲		▲		▲		
TemPlug70 (PG)			○	—	○	—	○	—	
DIN rail mount			—		—		—		
■ Accessories (optional)		Symbol							
Externally mounted: Motor operator		M C	●		●		●		
External operating handle	Breaker-mounted	H B	●		●		●		
	Door-mounted (variable depth)	H P	●		●		●		
Toggle extension		H A	●		●		●		
Mechanical interlock ⑨	Slide type	M S	●		●		●		
	Rear-connected type	M B	—		—		—		
	Link type	M L	●		●		●		
	Wire type	MW	●		●		●		
Toggle holder		H H	●		●		●		
Toggle lock		H L							
Terminal cover	For front-connected	C F	●		●		●		
	For rear-connected and plug-in	C R	●		●		●		
Terminal block for lead		T F	●		●		●		
Door flange		D F	●		●		●		
CE marking			Yes		Yes		Yes		
Overcurrent trip mechanism			Thermal-magnetic (adjustable)		Thermal-magnetic (adjustable)		Thermal-magnetic (adjustable)		
Colour of cover			Grey Blue		Grey Blue		Grey Blue		
Trip button (Colour)			Yes (Red)		Yes (Red)		Yes (Red)		
Suitability for isolation			Yes		Yes		Yes		
Reverse connection			Yes		Yes		Yes		

Notes:

◉ : Standard. This configuration used unless otherwise specified. ○ : Optional standard. Specify when ordering.
▲ : Semi-standard. ● : "yes" or "available". — : "no" or "not available".
① : DC is a special specification. When ordering, please specify DC.
⑨ : Mechanical interlocks cannot be applied to draw-out type (DR).
⑰ : See page 4-7 for the instantaneous trip value when using with DC. ⑤⓪ : A safety trip function is provided.
⑱ : Plug-in type (PM), draw-out type (DR), and TemPlug70 (PG) are only 500A.

Time/Current characteristic curves

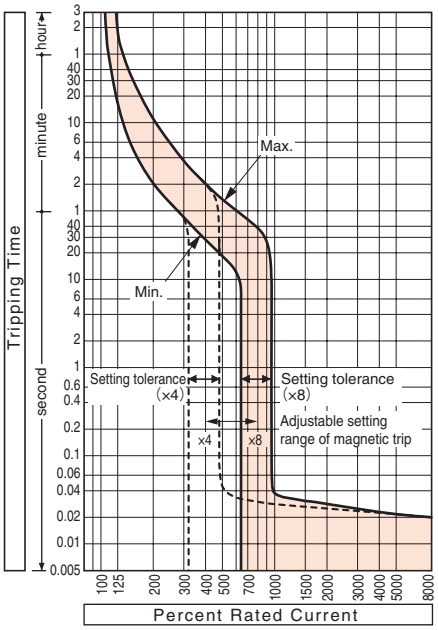

Ambient compensating curves

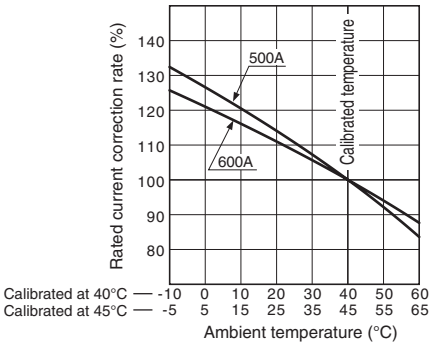

Magnetic trip pick-up current

Rated current (A)	I_n ×	Magnetic trip pick-up current (adjustable range) (A) 8	7	6	5	4
500		4000	3500	3000	2500	2000
600		4800	4200	3600	3000	2400

Note (1) : Setting tolerance: ±20%.
Remarks:
(1): Unless otherwise stated when ordering, the selector dial is factory set to position "8".
(2): The trip pick-up current of DC models is not adjustable.

Combinations of Internally Mounted Accessories (Optional)

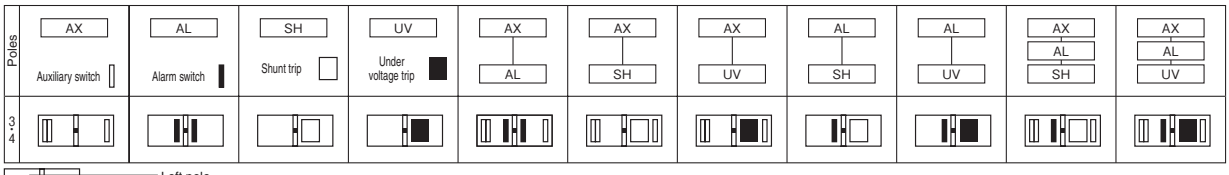

Toggle — Left pole / Right pole

Note: For auxiliary switches or alarm switches, left-hand mounting has priority.

Outline dimensions (mm)

PS630-CF, PS630-NF, PS630-GF

Front-connected

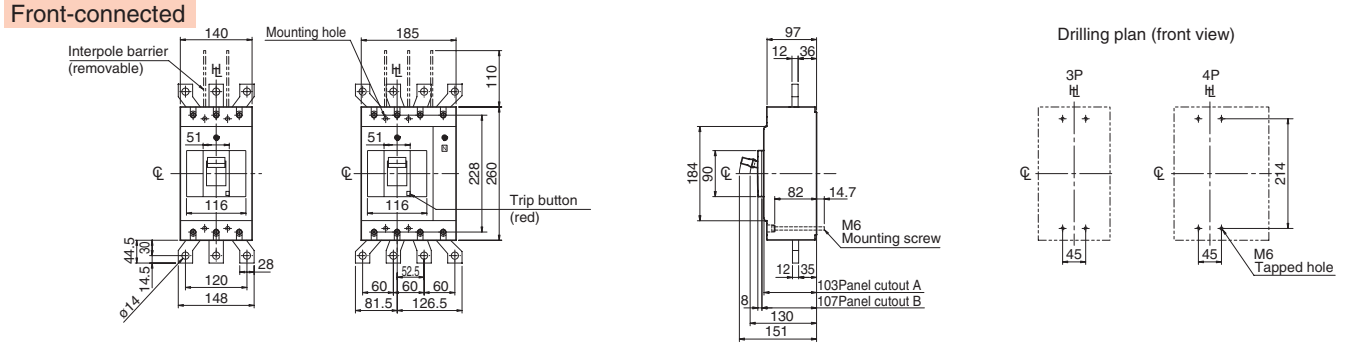

Rear-connected

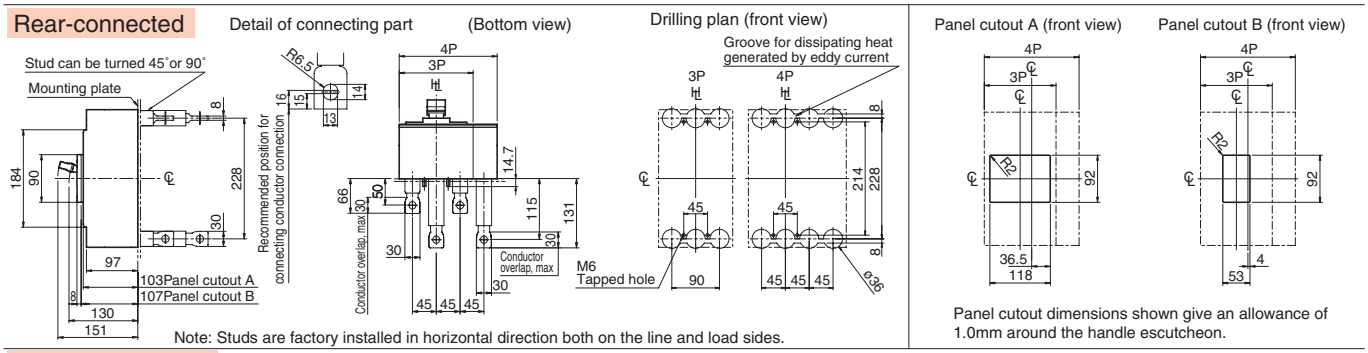

Note: Studs are factory installed in horizontal direction both on the line and load sides.

Panel cutout dimensions shown give an allowance of 1.0mm around the handle escutcheon.

Plug-in (Standard)

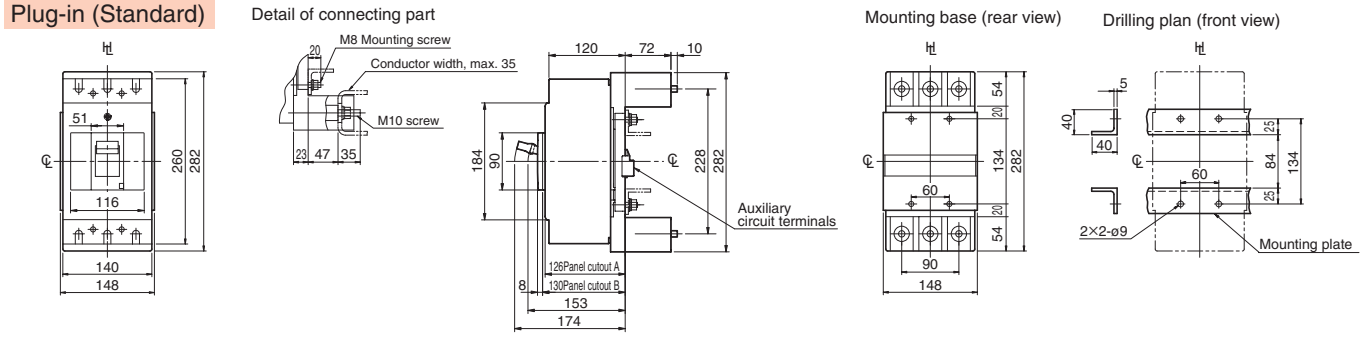

Plug-in (High-performance)

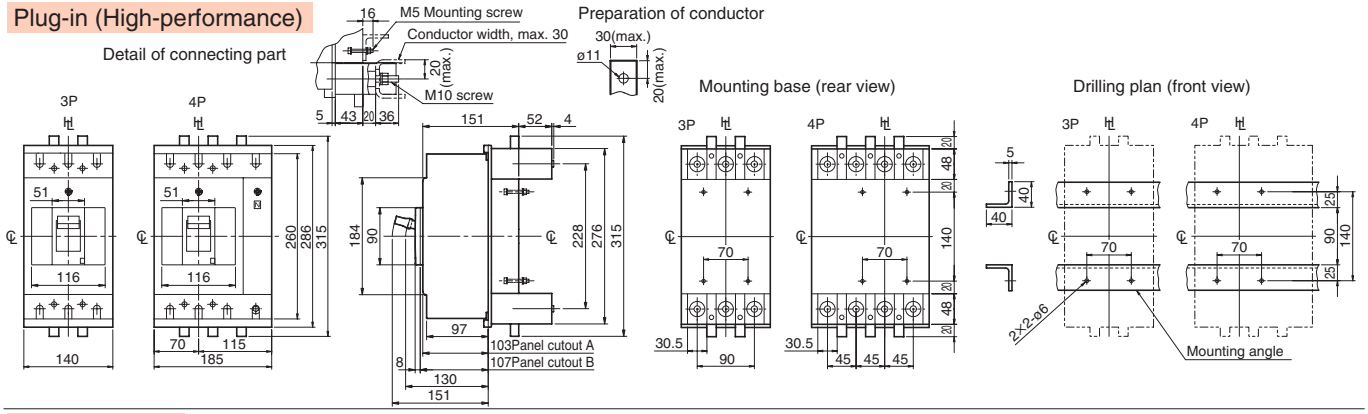

Flush-mounted

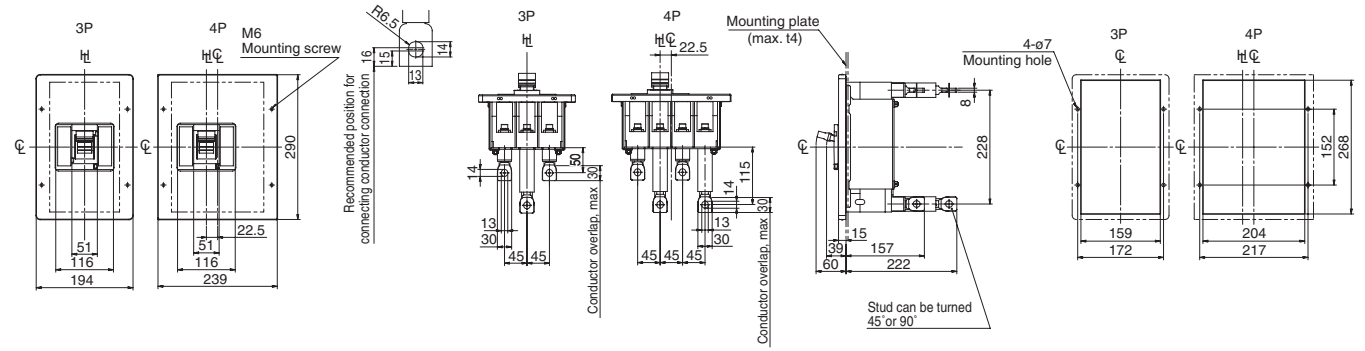

7 Characteristics and Outline Dimensions

TemBreak PRO

Moulded Case Circuit Breakers

PS630-NE, PS630-GE

Ratings and Specifications

Frame size (A)		630		630
Type		PS630-NE		PS630-GE
Number of poles		3	4	3	4
■ Ratings				
Rated current, A		Adjustable		Adjustable
Calibrated at 40°C		I_n=630		I_n=630
45°C		250	500	250	500
⑧⓪		300	600	300	600
		350	630	350	630
		400		400	
Rated insulation voltage〔U_i〕 V		800		800	
Rated impulse withstand voltage〔U_{imp}〕 kV		8		8	
Rated short time withstand current 〔I_{cw}〕 kA		—		—	
Utilization Category		A		A	
■ Rated breaking capacity, kA					
JIS C 8201-2-1 Ann.1 Ann.2	AC 690V	12/12		12/12	
IEC 60947-2	500V	30/30		50/50	
I_{cu}/I_{cs}(sym)	440V	45/45		65/65	
	415V	50/50		70/70	
	380V	50/50		70/70	
	240V	85/85		100/100	
	DC 250V	—		—	
	125V	—		—	
NK	AC 690V	—		—	
I_{cu}/I_{cs}(sym)	450V	—		—	
	240V	—		—	
	DC 250V	—		—	
Weight (◉ marked standard type) kg		6.0	8.0	6.0	8.0
■ Connections and Mountings					
Front-connected (FC)	Terminal screws	—		—	
	With extension bars	◉		◉	
Rear-connected (RC)	Flat bar studs	○		○	
Plug-in (PM) For switchboards	High-performance (PMB)	—		—	
	Standard (PMC)	—		—	
For distribution boards (PMD)		—		—	
Flush-mounted (FP)	With flat bar studs	○		○	
Draw-out type (DR)		—		—	
TemPlug70 (PG)		—		—	
DIN rail mount		—		—	
■ Accessories (optional)	Symbol				
Externally mounted: Motor operator	M C	●		●	
External operating handle: Breaker-mounted	H B	●		●	
Door-mounted (variable depth)	H P	●		●	
Toggle extension	H A	●		●	
Mechanical interlock: Slide type	M S	●		●	
Rear-connected type	M B	—		—	
Link type	M L	●		●	
Wire type	M W	●		●	
Toggle holder	H H	●		●	
Toggle lock	H L				
Terminal cover: For front-connected	C F	●		●	
For rear-connected and plug-in	C R	●		●	
Terminal block for lead	T F	●		●	
Door flange	D F	●		●	
CE marking		Yes		Yes	
Overcurrent trip mechanism		Electronic		Electronic	
Colour of cover		Grey Blue		Grey Blue	
Trip button (Colour)		Yes (Red)		Yes (Red)	
Suitability for isolation		Yes		Yes	
Reverse connection		Yes		Yes	

Notes:

◉ : Standard. This configuration used unless otherwise specified.

○ : Optional standard. Specify when ordering.

▲ : Semi-standard. ● : "yes" or "available". — : "no" or "not available".

⑤⓪ : A safety trip function is provided.

⑧⓪ : If the ambient temperature exceeds 45° C, reduce the operating current in accordance with 2 Environmental operating conditions of the chapter 8.

Time/Current characteristic curves

• Long time/Short time trip characteristics

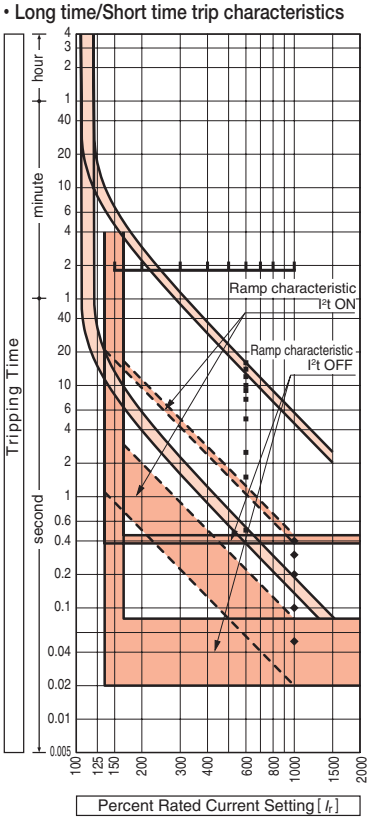

• Instantaneous trip characteristics

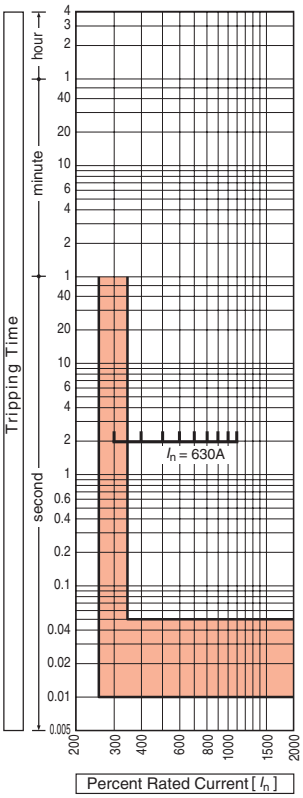

Note: See page 6-4 for Neutral protection, ground fault trip and preferential trip alarm characteristics.

Overcurrent tripping characteristics

TPOT OCR (LSIG) (I_n)=630A

Rated current settings (A) (I_r) = (I_r1)×(I_r2)	(I_r1) (A)=250, 300, 350, 400, 500, 600, 630 adjustable
	(I_r2)=0.91, 0.92, 0.93, 0.94, 0.95, 0.96, 0.97, 0.98, 0.99, 1.00 adjustable
Long time-delay time settings (s) : (t_r)	0.5, 1.5, 2.5, 5, 7.5, 9, 10, 12, 14, 16 adjustable at (I_r)×600%
	Time-delay setting tolerance –20% –20ms or more +0% +30ms or less
Short time-delay pick-up current (A) : (I_{sd})	(I_r)×1.5, 2, 3, 4, 5, 6, 7, 8, 10 or OFF
	Current setting tolerance within ±10%
Short time-delay time settings (ms) : (t_{sd})	50, 100, 200, 300, 400 adjustable
	Ramp characteristics I²t: ON or OFF However, definite time-delay characteristics with (I_r)×10 or more
	When (t_{sd})=50ms Time-delay setting tolerance –30ms or more +30ms or less When (t_{sd})=100ms to 400ms Time-delay setting tolerance –20ms or more +50ms or less
Instantaneous trip pick-up current (A) : (I_i)	(I_n)×3, 4, 5, 6, 7, 8, 9, 10, 11 adjustable
	Current setting tolerance within ±15%
Neutral protection pick-up current (A) : (I_N)	For 3P OFF fixed
	For 4P (I_r)×50%, 100% or OFF
Neutral protection time settings (s) : (t_N)	Operates with long time-delay time setting (t_r) and short time-delay time setting (t_{sd}) and also operates with instantaneous trip
Ground fault trip pick-up current (A) : (I_g)	3P for 3ø3W, 4P for 3ø4W (3P 3ø4W not supported) or OFF (I_n)×20% Current setting tolerance within ±10%
Ground fault trip time settings (ms) : (t_g)	200 Time-delay setting tolerance –20ms or more +50ms or less
Preferential trip alarm pick-up current (A) : (I_p)	(I_r)×80% Current setting tolerance within ±10%
Preferential trip alarm time settings (s) : (t_p)	(t_r)×50% Time-delay setting tolerance –20% –20ms or more +0% +30ms or less

Notes:

1: If not otherwise specified, the product will be delivered with the underlined standard setting values.

2: The TPOT type OCR (LSI) only has long time-delay trip, short time-delay trip, instantaneous trip, and preferential trip alarm.

Combinations of Internally Mounted Accessories (Optional)

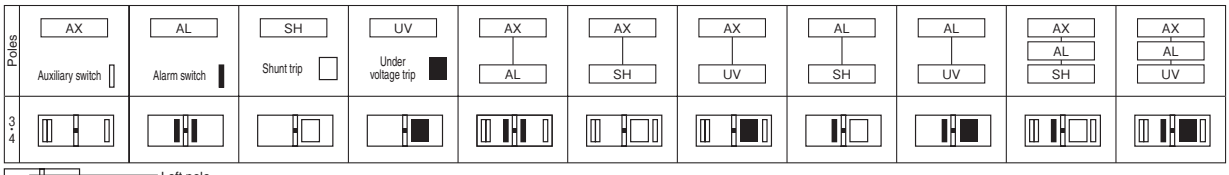

Note: For auxiliary switches or alarm switches, left-hand mounting has priority.

Outline dimensions (mm) — PS630-NE, PS630-GE

Front-connected

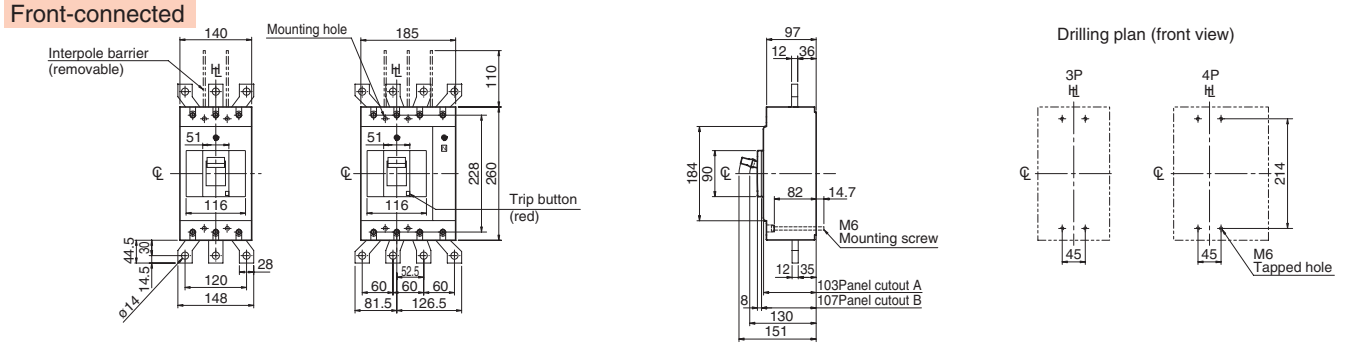

Rear-connected

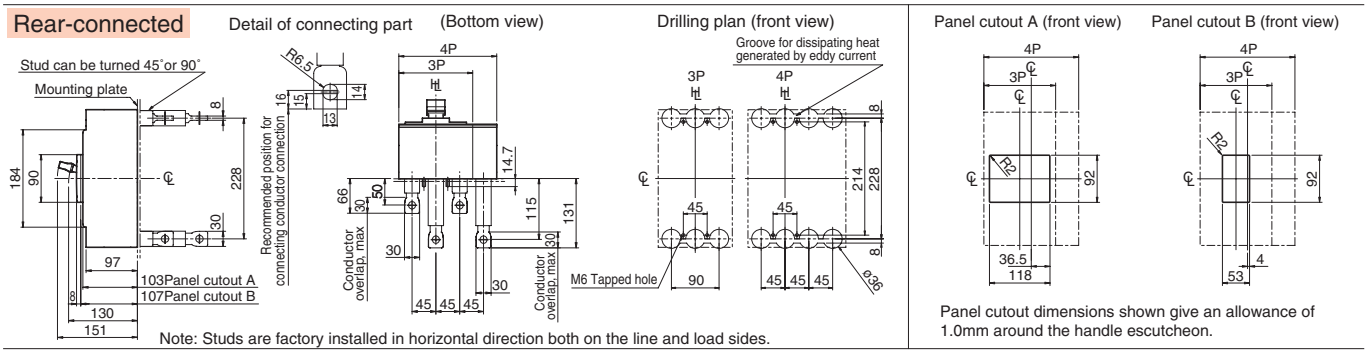

Note: Studs are factory installed in horizontal direction both on the line and load sides.

Panel cutout dimensions shown give an allowance of 1.0mm around the handle escutcheon.

Flush-mounted

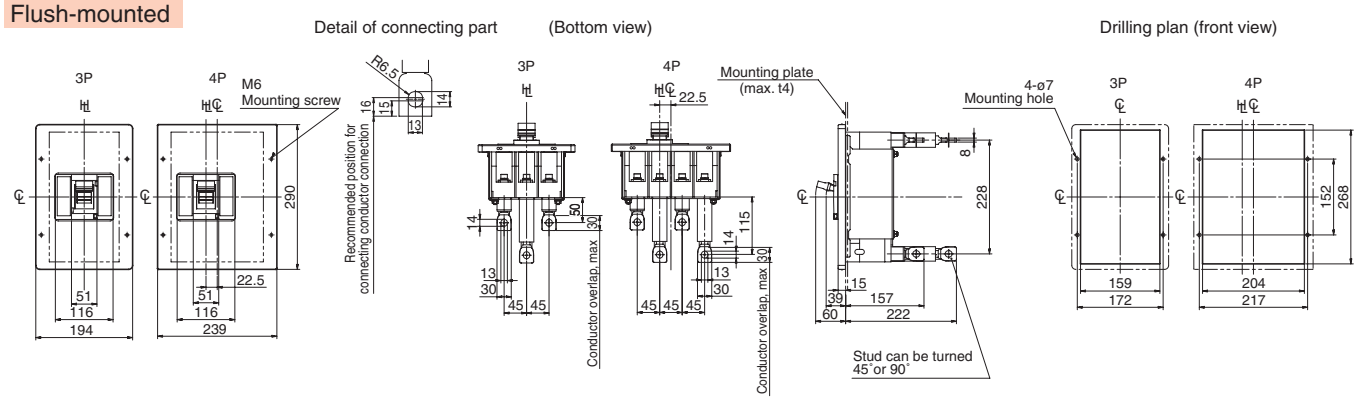

7 Characteristics and Outline Dimensions TemBreak PRO

Moulded Case Circuit Breakers

PH630-CF

Ratings and Specifications

Frame size (A)		600		
Type		PH630-CF		
Number of poles		3	4	
■ Ratings				
Rated current, A		500		
Calibrated at 40°C		600		
45°C		⑱		
Rated insulation voltage〔U_i〕 V		800		
Rated impulse withstand voltage〔U_{imp}〕 kV		8		
Rated short time withstand current 〔I_{cw}〕 kA		—		
Utilization Category		A		
■ Rated breaking capacity, kA				
JIS C 8201-2-1 Ann.1 Ann.2	AC 690V	12/12		
IEC 60947-2	AC 500V	65/65		
I_{cu}/I_{cs}(sym)	AC 440V	100/100		
	AC 415V	110/110		
	AC 380V	110/110		
	AC 240V	125/125		
	① DC 250V	50/50 ⑰		
	DC 125V	50/50 ⑰		
NK	AC 690V	12/12		
I_{cu}/I_{cs}(sym)	AC 450V	100/100		
	AC 240V	125/125		
	① DC 250V	—		
Weight (◉ marked standard type) kg		5.9	7.8	
■ Connections and Mountings				
Front-connected (FC)	Terminal screws	—		
	With extension bars	◉		
Rear-connected (RC)	Flat bar studs	○		
Plug-in (PM) For switchboards	High-performance (PMB)	○ ⑤⓪		
	Standard (PMC)	○	—	
For distribution boards (PMD)		—		
Flush-mounted (FP)	With flat bar studs	○		
Draw-out type (DR)		▲		
TemPlug70 (PG)		▲ ⑧①	—	
DIN rail mount		—		
■ Accessories (optional)		Symbol		
Externally mounted: Motor operator		M C	●	
External operating handle	Breaker-mounted	H B	●	
	Door-mounted (variable depth)	H P	●	
Toggle extension		H A	●	
Mechanical interlock ⑨	Slide type	M S	●	
	Rear-connected type	M B	—	
	Link type	M L	●	
	Wire type	M W	●	
Toggle holder		H H	●	
Toggle lock		H L		
Terminal cover	For front-connected	C F	●	
	For rear-connected and plug-in	C R	●	
Terminal block for lead		T F	●	
Door flange		D F	●	
CE marking		Yes		
Overcurrent trip mechanism		Thermal-magnetic (adjustable)		
Colour of cover		Grey Blue		
Trip button (Colour)		Yes (Red)		
Suitability for isolation		Yes		
Reverse connection		Yes		

Notes:

◉ : Standard. This configuration used unless otherwise specified. ○ : Optional standard. Specify when ordering.
▲ : Semi-standard. ● : "yes" or "available". — : "no" or "not available".
① : DC is a special specification. When ordering, please specify DC.
⑨ : Mechanical interlocks cannot be applied to draw-out type (DR).
⑰ : See page 4-7 for the instantaneous trip value when using with DC. ⑤⓪ : A safety trip function is provided.
⑱ : Plug-in type (PM), draw-out type (DR), and TemPlug70 (PG) are only 500A.
⑧① : They cannot be applied to circuits with a short circuit breaking current exceeding 85kA.

Time/Current characteristic curves

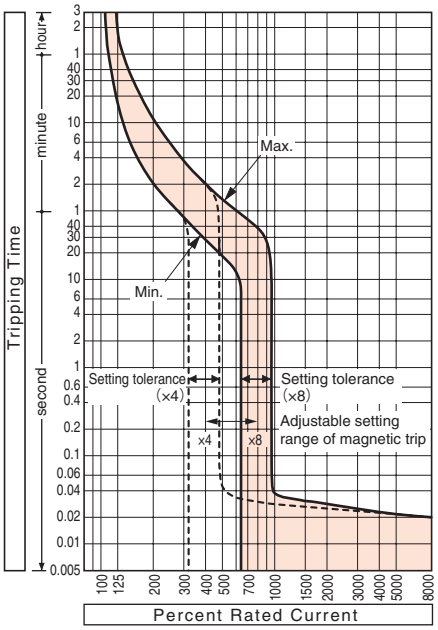

Ambient compensating curves

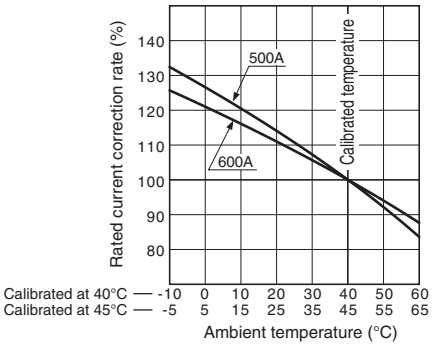

Magnetic trip pick-up current

Rated current (A)	Magnetic trip pick-up current (adjustable range) (A) I_n× 8	7	6	5	4
500	4000	3500	3000	2500	2000
600	4800	4200	3600	3000	2400

Note (1) : Setting tolerance: ±20%.
Remarks:
(1): Unless otherwise stated when ordering, the selector dial is factory set to position "8".
(2): The trip pick-up current of DC models is not adjustable.

Combinations of Internally Mounted Accessories (Optional)

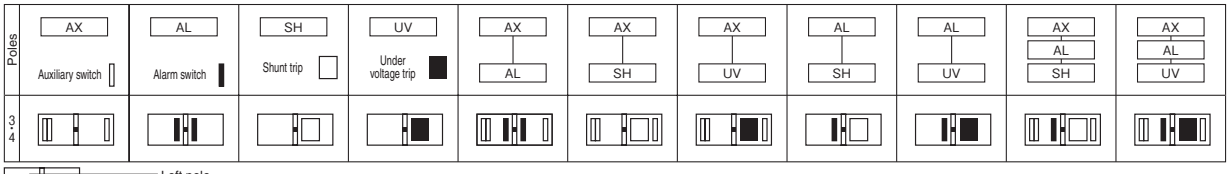

Note: For auxiliary switches or alarm switches, left-hand mounting has priority.

Outline dimensions (mm) PH630-CF

Front-connected

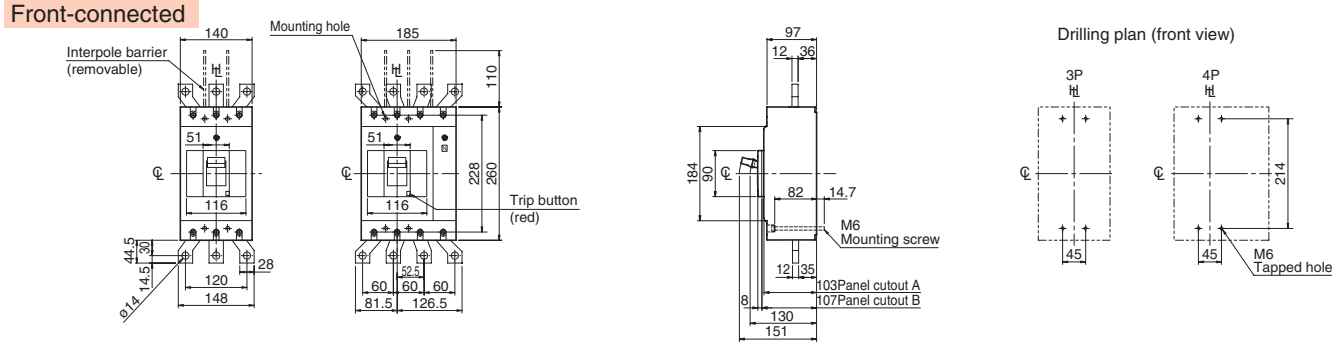

Rear-connected

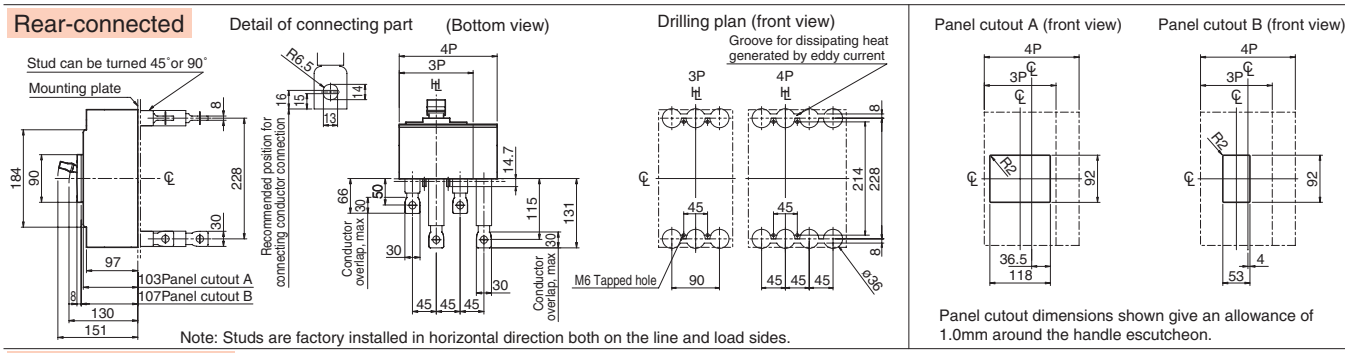

Note: Studs are factory installed in horizontal direction both on the line and load sides.

Panel cutout dimensions shown give an allowance of 1.0mm around the handle escutcheon.

Plug-in (Standard)

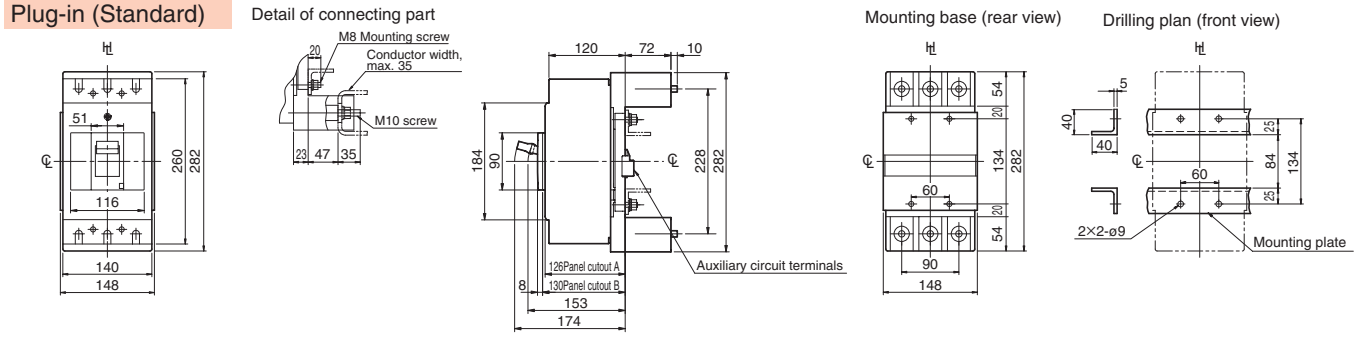

Plug-in (High-performance)

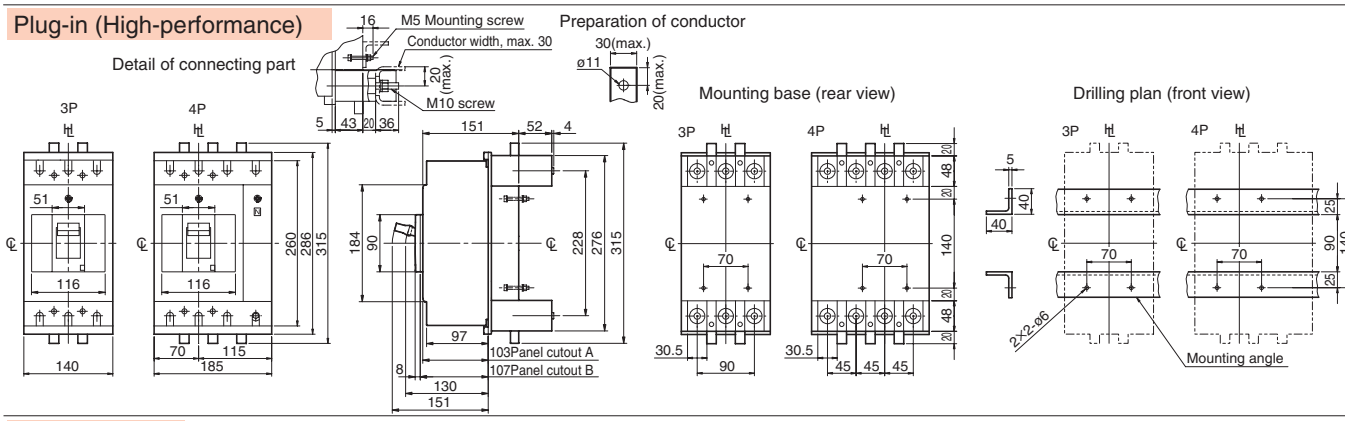

Flush-mounted

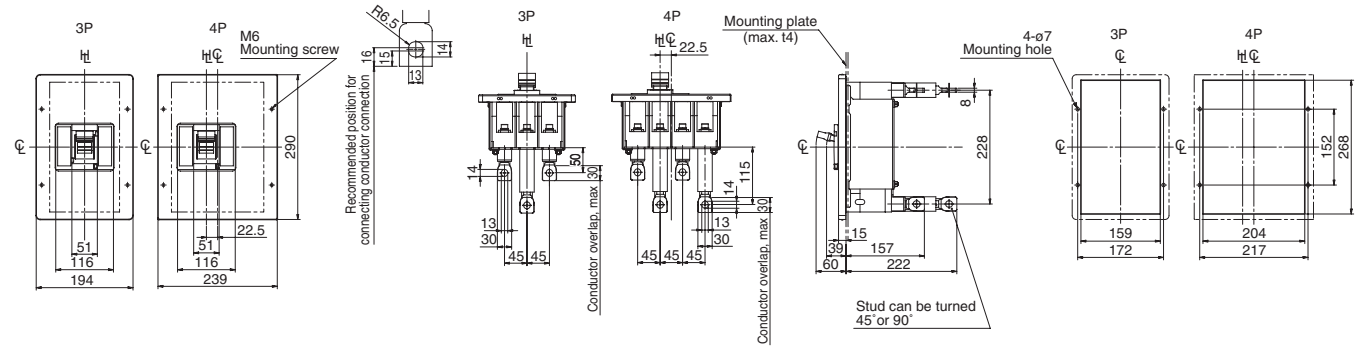

7 Characteristics and Outline Dimensions

TemBreak PRO

Moulded Case Circuit Breakers

PH630-CE

Ratings and Specifications

Frame size (A)			630	
Type			PH630-CE	
Number of poles			3	4
■ Ratings				
Rated current, A			Adjustable	
Calibrated at 40°C			I_n=630	
45°C			250	500
⑧⓪			300	600
			350	630
			400	
Rated insulation voltage〔U_i〕 V			800	
Rated impulse withstand voltage〔U_{imp}〕 kV			8	
Rated short time withstand current 〔I_{cw}〕 kA			—	
Utilization Category			A	
■ Rated breaking capacity, kA				
JIS C 8201-2-1 Ann.1 Ann.2	AC	690V	12/12	
IEC 60947-2		500V	65/65	
I_{cu}/I_{cs}(sym)		440V	100/100	
		415V	110/110	
		380V	110/110	
		240V	125/125	
	DC	250V	—	
		125V	—	
NK	AC	690V	—	
I_{cu}/I_{cs}(sym)		450V	—	
		240V	—	
	DC	250V	—	
Weight (◉ marked standard type) kg			6.0	8.0
■ Connections and Mountings				
Front-connected (FC)	Terminal screws		—	
	With extension bars		◉	
Rear-connected (RC)	Flat bar studs		○	
Plug-in (PM) For switchboards	High-performance (PMB)		—	
	Standard (PMC)		—	
For distribution boards (PMD)			—	
ush-mounted (FP)	With flat bar studs		○	
Draw-out type (DR)			—	
TemPlug70 (PG)			—	
DIN rail mount			—	

■ Accessories (optional)			Symbol		
Externally mounted	Motor operator		M C	●	
	External operating handle	Breaker-mounted	H B	●	
		Door-mounted (variable depth)	H P	●	
	Toggle extension		H A	●	
	Mechanical interlock	Slide type	M S	●	
		Rear-connected type	M B	—	
		Link type	M L	●	
		Wire type	MW	●	
	Toggle holder		H H	●	
	Toggle lock		H L		
	Terminal cover	For front-connected	C F	●	
		For rear-connected and plug-in	C R	●	
	Terminal block for lead		T F	●	
	Door flange		D F	●	
CE marking				Yes	
Overcurrent trip mechanism				Electronic	
Colour of cover				Grey Blue	
Trip button (Colour)				Yes (Red)	
Suitability for isolation				Yes	
Reverse connection				Yes	

Notes:

◉ : Standard. This configuration used unless otherwise specified.

○ : Optional standard. Specify when ordering.

▲ : Semi-standard. ● : "yes" or "available". — : "no" or "not available".

⑤⓪ : A safety trip function is provided.

⑧⓪ : If the ambient temperature exceeds 45° C, reduce the operating current in accordance with 2 Environmental operating conditions of the chapter 8.

Time/Current characteristic curves

• Long time/Short time trip characteristics

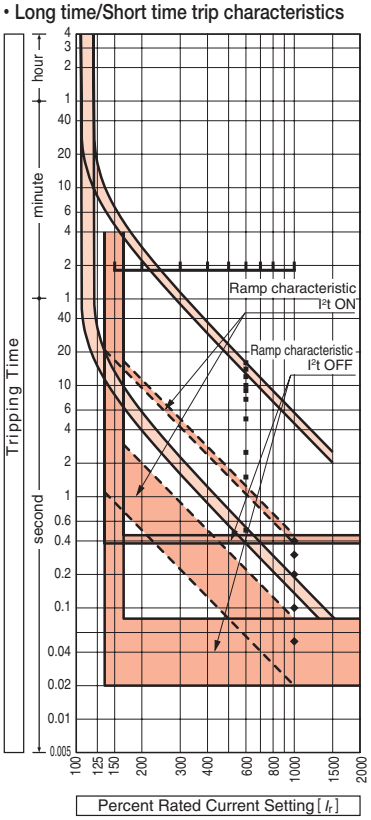

• Instantaneous trip characteristics

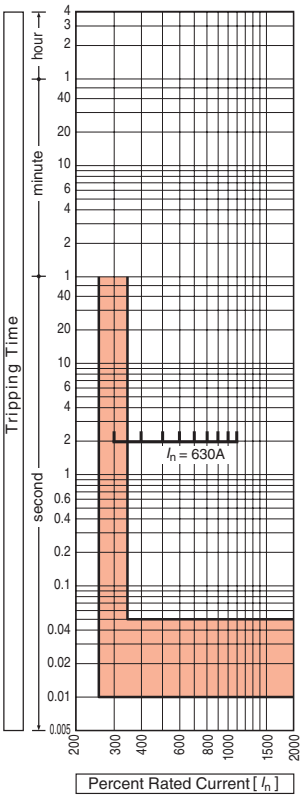

Note: See page 6-4 for Neutral protection, ground fault trip and preferential trip alarm characteristics.

Overcurrent tripping characteristics

TPOP OCR (LSIG) (I_n)=630A

Rated current settings (A) (I_r) = (I_r1)×(I_r2)	(I_r1) (A)=250, 300, 350, 400, 500, 600, 630 adjustable
	(I_r2)=0.91, 0.92, 0.93, 0.94, 0.95, 0.96, 0.97, 0.98, 0.99, 1.00 adjustable
Long time-delay time settings (s) : (t_r)	0.5, 1.5, 2.5, 5, 7.5, 9, 10, 12, 14, 16 adjustable at (I_r)×600%
	Time-delay setting tolerance –20% –20ms or more +0% +30ms or less
Short time-delay pick-up current (A) : (I_{sd})	(I_r)×1.5, 2, 3, 4, 5, 6, 7, 8, 10 or OFF
	Current setting tolerance within ±10%
Short time-delay time settings (ms) : (t_{sd})	50, 100, 200, 300, 400 adjustable
	Ramp characteristics I²t: ON or OFF However, definite time-delay characteristics with (I_r)×10 or more
	When (t_{sd})=50ms Time-delay setting tolerance –30ms or more +30ms or less When (t_{sd})=100ms to 400ms Time-delay setting tolerance –20ms or more +50ms or less
Instantaneous trip pick-up current (A) : (I_i)	(I_n)×3, 4, 5, 6, 7, 8, 9, 10, 11 adjustable
	Current setting tolerance within ±15%
Neutral protection pick-up current (A) : (I_N)	For 3P OFF fixed
	For 4P (I_r)×50%, 100% or OFF
Neutral protection time settings (s) : (t_N)	Operates with long time-delay time setting (t_r) and short time-delay time setting (t_{sd}) and also operates with instantaneous trip
Ground fault trip pick-up current (A) : (I_g)	3P for 3ø3W, 4P for 3ø4W (3P 3ø4W not supported) or OFF (I_n)×20% Current setting tolerance within ±10%
Ground fault trip time settings (ms) : (t_g)	200 Time-delay setting tolerance –20ms or more +50ms or less
Preferential trip alarm pick-up current (A) : (I_p)	(I_r)×80% Current setting tolerance within ±10%
Preferential trip alarm time settings (s) : (t_p)	(t_r)×50% Time-delay setting tolerance –20% –20ms or more +0% +30ms or less

Notes:

1: If not otherwise specified, the product will be delivered with the underlined standard setting values.

2: The TPOT type OCR (LSI) only has long time-delay trip, short time-delay trip, instantaneous trip, and preferential trip alarm.

Combinations of Internally Mounted Accessories (Optional)

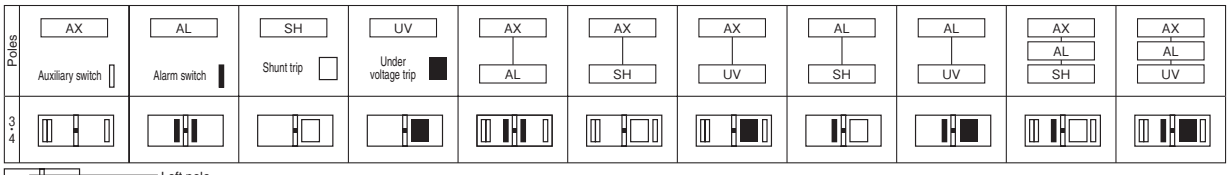

Note: For auxiliary switches or alarm switches, left-hand mounting has priority.

Outline dimensions (mm) PH630-CE

Front-connected

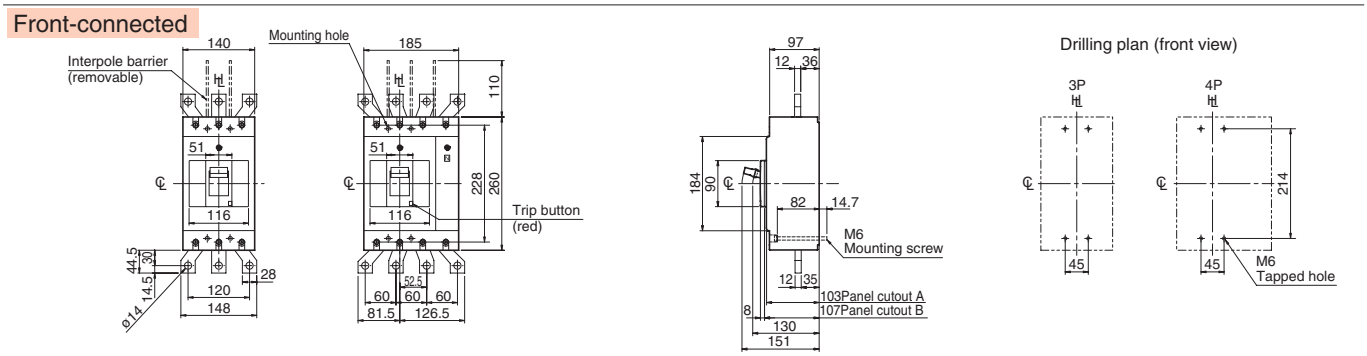

Rear-connected

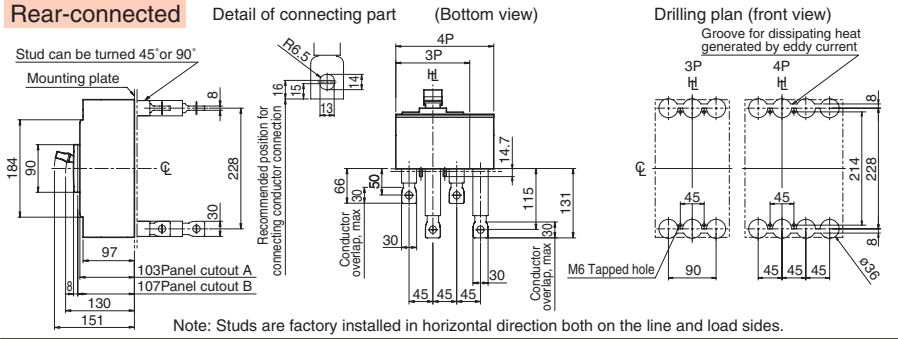

Note: Studs are factory installed in horizontal direction both on the line and load sides.

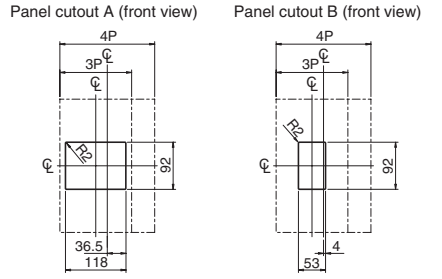

Panel cutout dimensions shown give an allowance of 1.0mm around the handle escutcheon.

Flush-mounted

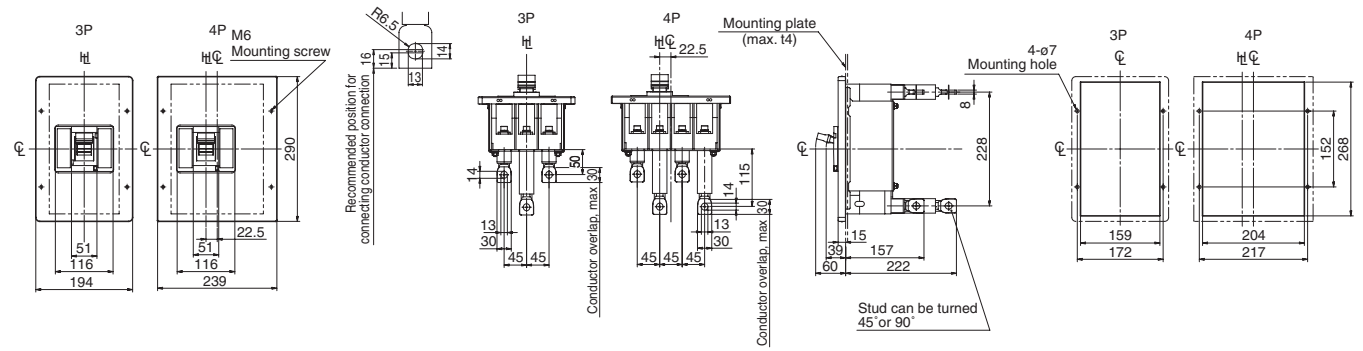

7 Characteristics and Outline Dimensions

TemBreak PRO

Moulded Case Circuit Breakers

H630-NE, L630-NE

Ratings and Specifications

Frame size (A)			630		630			
Type			**H630-NE**		**L630-NE**			
Number of poles			3	4	3	4		
■ Ratings								
Rated current, A			Adjustable		Adjustable			
Calibrated at 40°C			I_{CT}=630		I_{CT}=630			
45°C			250	500	250	500		
⑱			300	600	300	600		
			350	630	350	630		
			400		400			
Rated insulation voltage〔U_i〕 V			690		690			
Rated impulse withstand voltage〔U_{imp}〕 kV			8		8			
Rated short time withstand current 〔I_{cw}〕 kA			10 (0.3sec.)		10 (0.3sec.)			
Utilization Category			B		B			
■ Rated breaking capacity, kA								
JIS C 8201-2-1 Ann.1 Ann.2	AC	690V	25/20		25/20			
IEC 60947-2		500V	45/34		45/34			
I_{cu}/I_{cs}(sym)		440V	125/94		180/135			
		415V	125/94		200/150			
		380V	125/94		200/150			
		240V	150/150		200/150			
	DC	250V	—		—			
		125V	—		—			
NK	AC	690V	25/20		25/20			
I_{cu}/I_{cs}(sym)		450V	125/94		180/135			
		240V	150/150		200/150			
	DC	250V	—		—			
Weight (◉ marked standard type) kg			13.5	19.6	13.5	19.6		
■ Connections and Mountings								
Front-connected (FC)	Terminal screws		—		—			
	With extension bars		◉		◉			
Rear-connected (RC)	Flat bar studs		○		○			
Plug-in (PM) For switchboards	High-performance (PMB)		○ ⑤1		○ ⑤1			
	Standard (PMC)		○	—	○	—		
For distribution boards (PMD)			—		—			
Flush-mounted (FP)	With flat bar studs		○		○			
Draw-out type (DR)			—		—			
TemPlug70 (PG)			—		—			
DIN rail mount			—		—			
■ Accessories (optional)		Symbol						
Externally mounted: Motor operator		M C	●		●			
External operating handle	Breaker-mounted	H B	●		●			
	Door-mounted (variable depth)	H P	●		●			
Toggle extension		H A	●		●			
Mechanical interlock	Slide type	M S	●		●			
	Rear-connected type	M B	—		—			
	Link type	M L	●		●			
	Wire type	M W	●		●			
Toggle holder		H H	●		●			
Toggle lock		H L						
Terminal cover	For front-connected	C F	●		●			
	For rear-connected and plug-in	C R	●		●			
Terminal block for lead		T F	●		●			
Door flange		D F	●		●			
CE marking			Yes		Yes			
Overcurrent trip mechanism			Electronic ⑯		Electronic ⑯			
Colour of cover			Grey Blue		Grey Blue			
Trip button (Colour)			Yes (Red)		Yes (Red)			
Suitability for isolation			Yes		Yes			
Reverse connection			Yes		Yes			

Notes:

◉ : Standard. This configuration used unless otherwise specified. ○ : Optional standard. Specify when ordering.

▲ : Semi-standard. ● : "yes" or "available". — : "no" or "not available".

⑯ : Optional preferential alarm or ground fault trip function available on request.

⑤1 : A safety lock function is provided.

⑱ : If the ambient temperature exceeds 45° C, reduce the operating current in accordance with 2 Environmental operating conditions of the chapter 8.

Time/Current characteristic curves

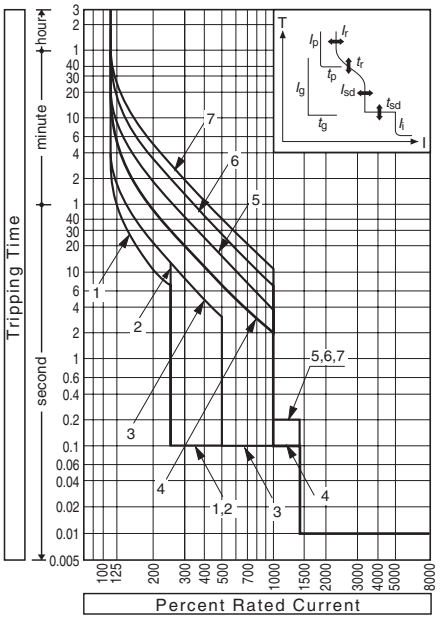

Overcurrent tripping characteristics

Characteristics No.		1	2	3	4	5	6	7
Rated current settings (A) : (I_r)		CT rated current : (I_{CT}) = 630A 250, 300, 350, 400, 500, 600, 630						
Long time-delay time settings (s) : (t_r)		11	21	21	5	10	19	29
		at (I_r)×200%			at (I_r)×600%			
		Setting tolerance ±20%						
Short time-delay pick-up current (A) : (I_{sd})	(I_r)×	2.5	2.5	5	10	10	10	10
		Setting tolerance ±15%						
Short time-delay time settings (s) : (t_{sd})		0.1	0.1	0.1	0.1	0.2	0.2	0.2
		Total clearing time +50ms, resettable time –20ms						
Instantaneous trip pick-up current (A) : (I_i)		(I_r)×1400% Max. (I_{CT})×1200% Setting tolerance ±20%						
Option: Preferential trip alarm	Pick-up current (A) : (I_p)	(I_r)×80% Setting tolerance ±10%						
	Time settings (s) : (t_p)	Definite time-delay characteristic, 40sec. Setting tolerance ±10%						
Ground falut trip	Pick-up current (A) : (I_g)	(I_{CT})×20% Setting tolerance ±15%						
	Time settings (s) : (t_g)	Definite time-delay characteristic, 0.2sec. Total tripping time +50ms, resettable time –20ms.						
Neutral protection	Pick-up current (A) : (I_N)	(I_r)×100% or 50% selectable ②						
	Time settings (s) : (t_N)	(t_N)=(t_r) Same as Long time-delay time settings						

Remark: Characteristic No.4 will be applied as standard setting unless otherwise specified.

Note ②: When (I_r) < (I_{CT}), the pick-up current tolerance becomes large when (I_N)=(I_r)×50% is set.

Combinations of Internally Mounted Accessories (Optional)

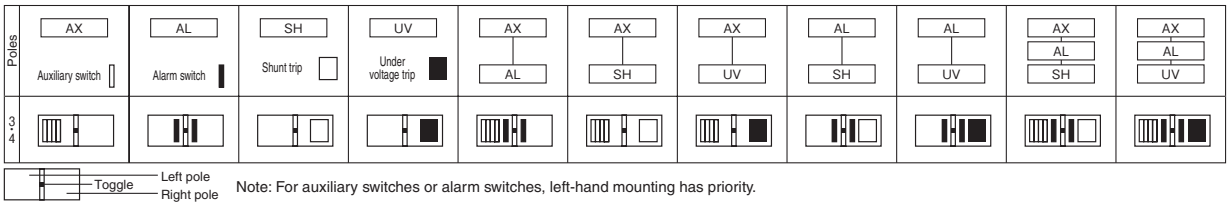

Note: For auxiliary switches or alarm switches, left-hand mounting has priority.

Outline dimensions (mm) H630-NE, L630-NE

Front-connected

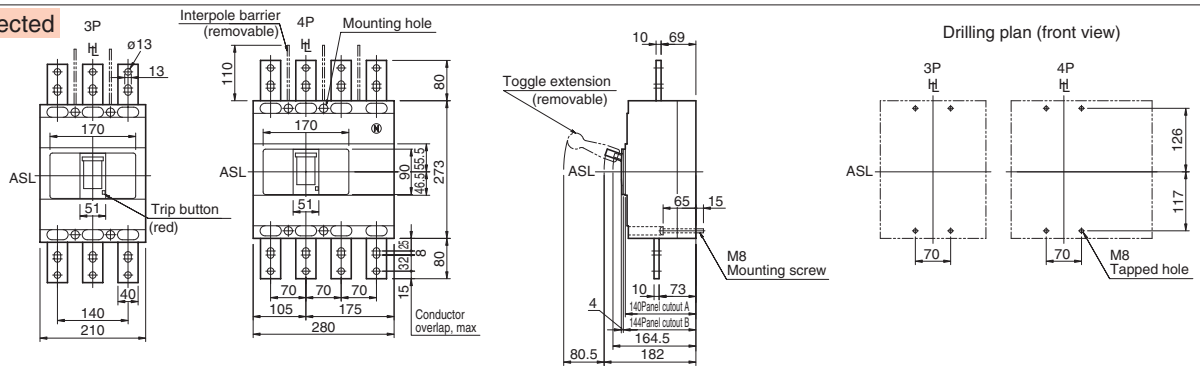

Rear-connected

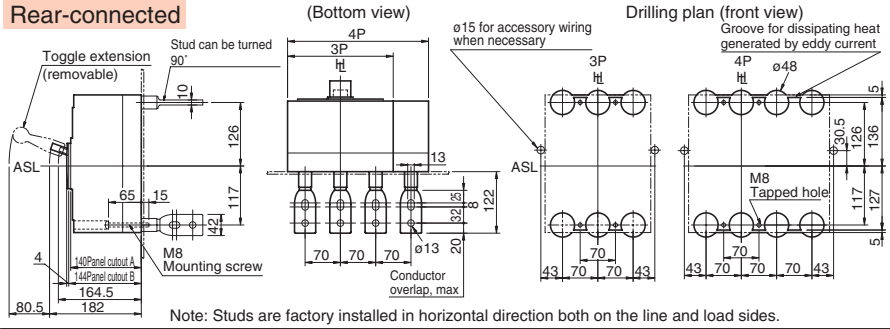

Note: Studs are factory installed in horizontal direction both on the line and load sides.

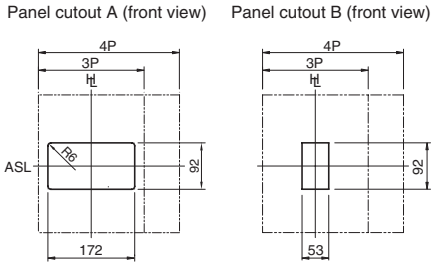

Panel cutout dimensions shown give an allowance of 1.0mm around the handle escutcheon.

Plug-in (Standard)

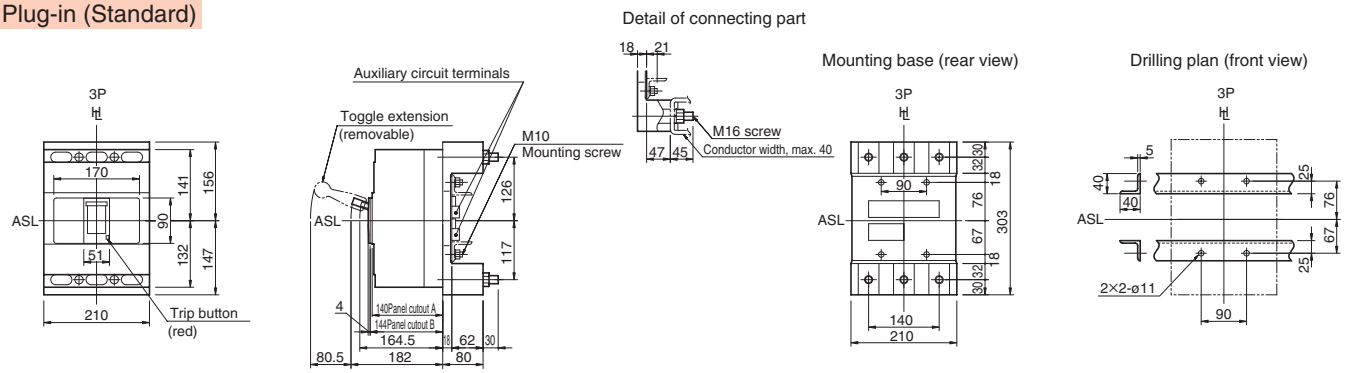

Plug-in (High-performance)

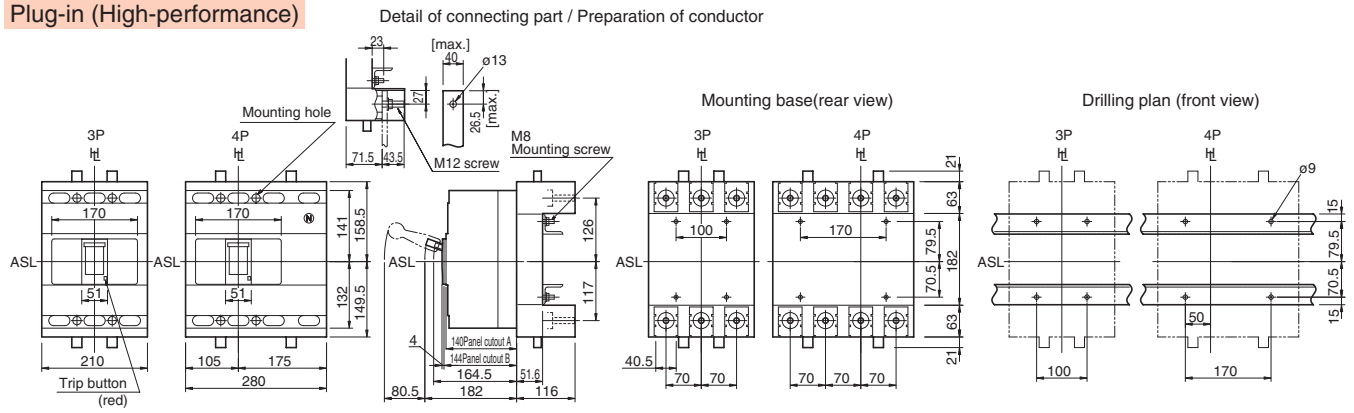

Flush-mounted

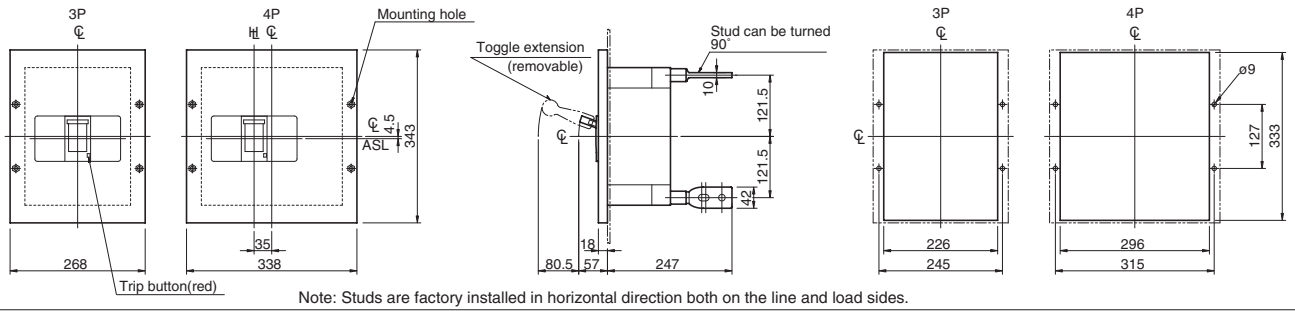

Note: Studs are factory installed in horizontal direction both on the line and load sides.

7 Characteristics and Outline Dimensions TemBreak PRO

Moulded Case Circuit Breakers

S800-CF, S800-NF, S800-RF, S800-PF

Ratings and Specifications

Frame size (A)			800		800		800		800	
Type			S800-CF		S800-NF		S800-RF		S800-PF	
Number of poles			3	4	3	4	3	4	3	4
■ Ratings										
Rated current, A			700		700		700		700	
Calibrated at 40°C			800		800		800		800	
45°C										
Rated insulation voltage〔U_i〕 V			690		690		690		690	
Rated impulse withstand voltage〔U_{imp}〕 kV			8		8		8		8	
Rated short time withstand current 〔I_{cw}〕 kA			—		—		—		—	
Utilization Category			A		A		A		A	
■ Rated breaking capacity, kA										
JIS C 8201-2-1 Ann.1 Ann.2	AC	690V	10/10		20/20		25/20		25/20	
IEC 60947-2		500V	15/15		30/30		45/34		45/34	
I_{cu}/I_{cs}(sym)		440V	30/30		50/50		65/50		85/50	
		415V	36/36		50/50		70/50		100/50	
		380V	36/36		50/50		70/50		100/50	
		240V	50/50		85/85		100/75		125/125	
	① DC	250V	50/50		50/50		50/50		50/50	
		125V	50/50		50/50		50/50		50/50	
NK	AC	690V	10/10		20/20		—		25/20	
I_{cu}/I_{cs}(sym)		450V	30/30		50/50		—		85/50	
		240V	50/50		85/85		—		125/125	
	① DC	250V	—		—		—		—	
Weight (◉ marked standard type) kg			8.5	11.5	8.5	11.5	8.5	11.5	8.5	11.5
■ Connections and Mountings										
Front-connected (FC)	Terminal screws		—		—		—		—	
	With extension bars		◉		◉		◉		◉	
Rear-connected (RC)	Flat bar studs		○		○		○		○	
Plug-in (PM) For switchboards	High-performance (PMB)		○ ⑤1		○ ⑤1		○ ⑤1		○ ⑤1	
	Standard (PMC)		○	—	○	—	○	—	○	—
For distribution boards	(PMC)		—		—		—		—	
	(PMD)		—		—		—		—	
Flush-mounted (FP)	With flat bar studs		○		○		○		○	
Draw-out type (DR)			▲		▲		▲		▲	
TemPlug70 (PG)			—		—		—		—	
DIN rail mount			—		—		—		—	
■ Accessories (optional)		Symbol								
Externally mounted: Motor operator		M C	●		●		●		●	
External operating handle	Breaker-mounted	H B	●		●		●		●	
	Door-mounted (variable depth)	H P	●		●		●		●	
Toggle extension		H A	●		●		●		●	
Mechanical interlock ⑨	Slide type	M S	●		●		●		●	
	Rear-connected type	M B	—		—		—		—	
	Link type	M L	●		●		●		●	
	Wire type	M W	●		●		●		●	
Toggle holder		H H	●		●		●		●	
Toggle lock		H L								
Terminal cover	For front-connected	C F	●		●		●		●	
	For rear-connected and plug-in	C R	●		●		●		●	
Terminal block for lead		T F	●		●		●		●	
Door flange		D F	●		●		●		●	
CE marking			Yes		Yes		Yes		Yes	
Overcurrent trip mechanism			Thermal-magnetic (adjustable)		Thermal-magnetic (adjustable)		Thermal-magnetic (adjustable)		Thermal-magnetic (adjustable)	
Colour of cover			Grey Blue		Grey Blue		Grey Blue		Grey Blue	
Trip button (Colour)			Yes (Red)		Yes (Red)		Yes (Red)		Yes (Red)	
Suitability for isolation			Yes		Yes		Yes		Yes	
Reverse connection			Yes		Yes		Yes		Yes	

Notes:

◉ : Standard. This configuration used unless otherwise specified. ○ : Optional standard. Specify when ordering.

▲ : Semi-standard. ● : "yes" or "available". — : "no" or "not available".

① : DC is a special specification. When ordering, please specify DC.

⑨ : Mechanical interlocks cannot be applied to draw-out type (DR).

⑤1 : A safety lock function is provided.

Time/Current characteristic curves

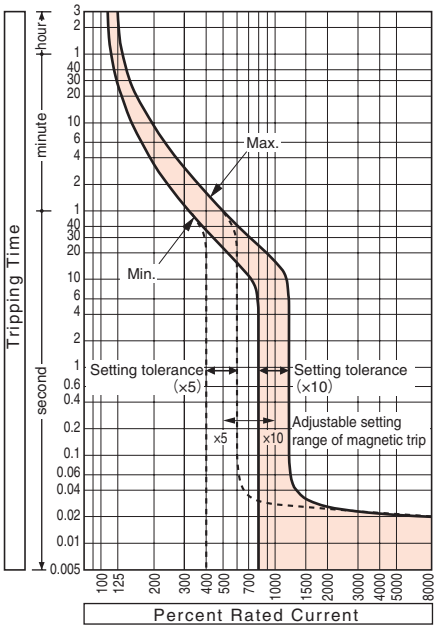

Ambient compensating curves

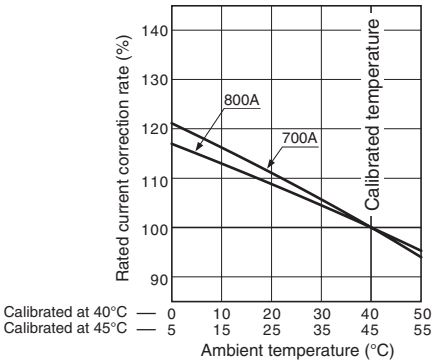

Magnetic trip pick-up current

Rated current (A)	Magnetic trip pick-up current (adjustable range) (A) I_n× 10	9	8	7	6	5
700	7000	6300	5600	4900	4200	3500
800	8000	7200	6400	5600	4800	4000

Note (1) : Setting tolerance: ±20%.

Remarks:

(1): Unless otherwise stated when ordering, the selector dial is factory set to position "10".

(2): The trip pick-up current of DC models is not adjustable; the dial position corresponding to the trip pick-up current is marked with a white point.

Combinations of Internally Mounted Accessories (Optional)

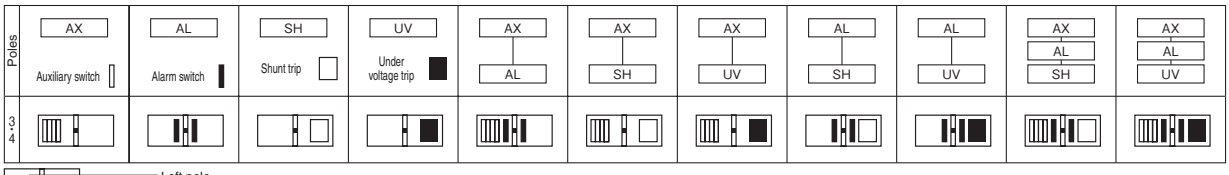

Note: For auxiliary switches or alarm switches, left-hand mounting has priority.

Outline dimensions (mm) S800-CF, S800-NF, S800-RF, S800-PF

Front-connected

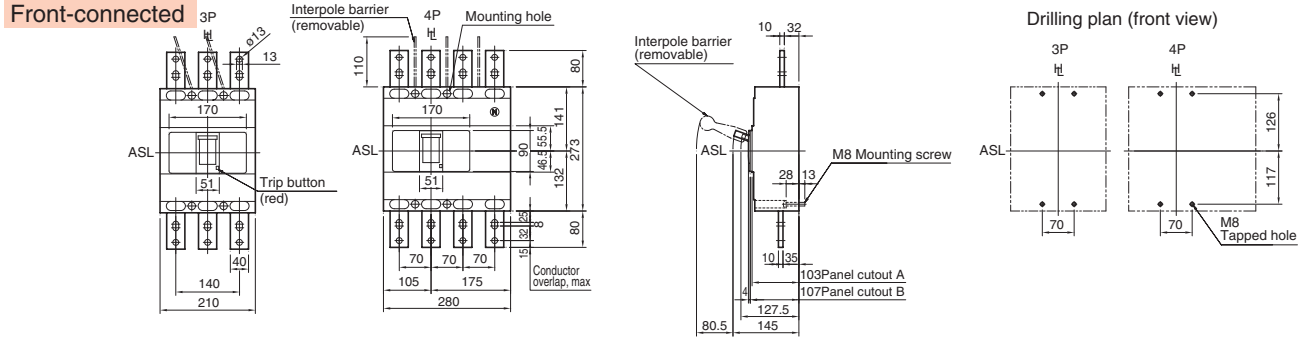

Rear-connected

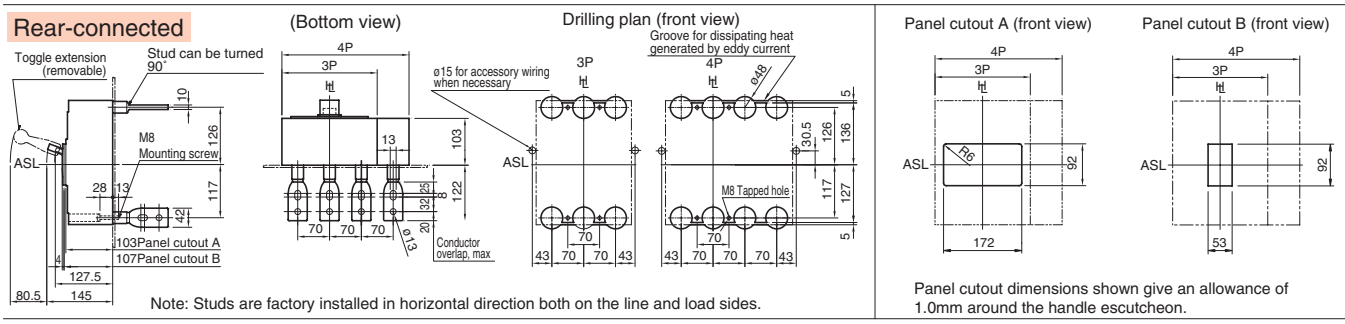

Note: Studs are factory installed in horizontal direction both on the line and load sides.

Panel cutout dimensions shown give an allowance of 1.0mm around the handle escutcheon.

Plug-in(Standard)

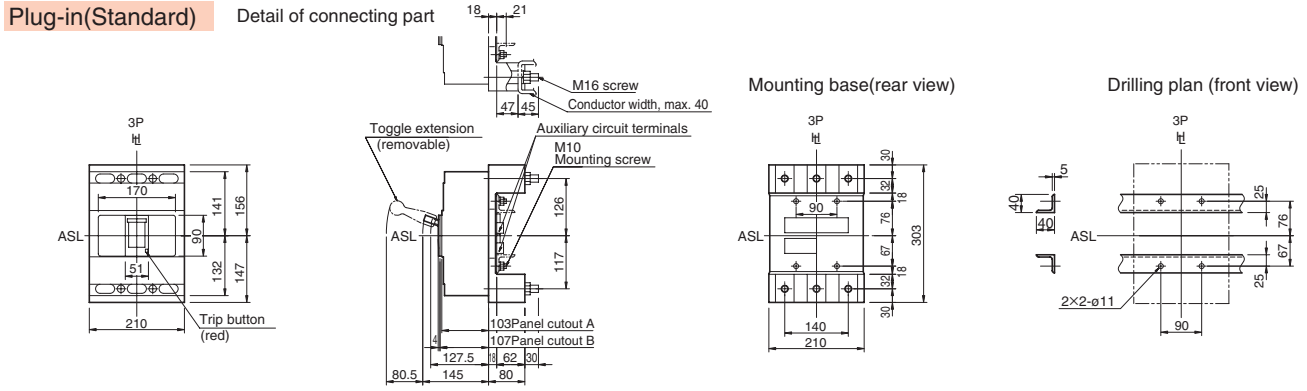

Plug-in(High-performance)

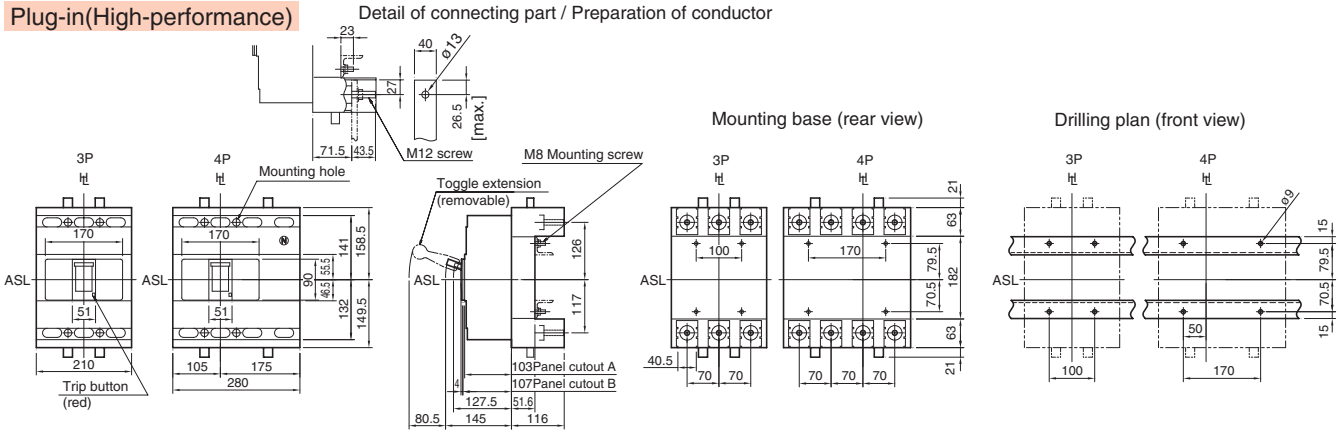

Flush-mounted

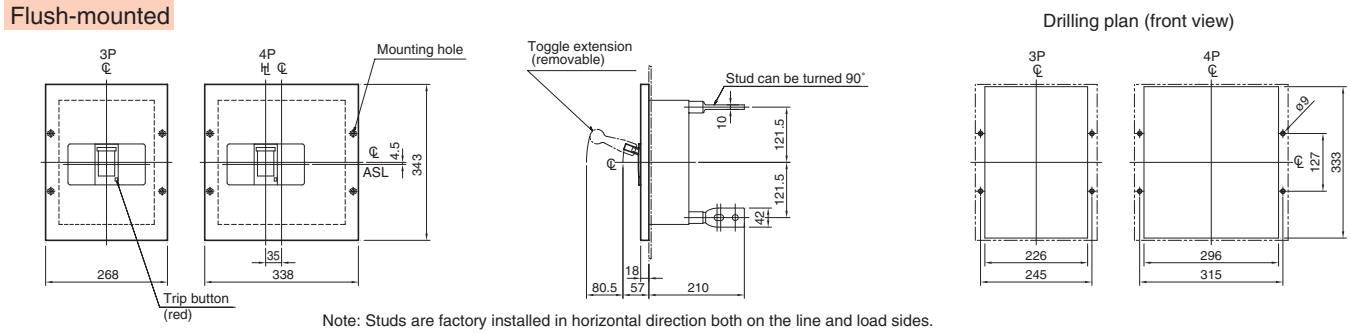

Note: Studs are factory installed in horizontal direction both on the line and load sides.

7 Characteristics and Outline Dimensions TemBreak PRO

Moulded Case Circuit Breakers

S800-NE, S800-RE, S800-PE

Ratings and Specifications

Frame size (A)			800		800		800	
Type			S800-NE		S800-RE		S800-PE	
Number of poles			3	4	3	4	3	4
■ Ratings								
Rated current, A			Adjustable		Adjustable		Adjustable	
Calibrated at 40°C			I_{CT}=800		I_{CT}=800		I_{CT}=800	
45°C			350	600	350	600	350	600
⑱			400	700	400	700	400	700
			450	800	450	800	450	800
			500		500		500	
Rated insulation voltage〔U_i〕 V			690		690		690	
Rated impulse withstand voltage〔U_{imp}〕 kV			8		8		8	
Rated short time withstand current 〔I_{cw}〕 kA			10(0.3sec.)		10(0.3sec.)		10(0.3sec.)	
Utilization Category			B		B		B	
■ Rated breaking capacity, kA								
JIS C 8201-2-1 Ann.1 Ann.2	AC	690V	20/20		25/20		25/20	
IEC 60947-2		500V	30/30		45/34		45/34	
I_{cu}/I_{cs}(sym)		440V	50/50		65/50		85/50	
		415V	50/50		70/50		100/50	
		380V	50/50		70/50		100/50	
		240V	85/85		100/75		125/125	
	DC	250V	—		—		—	
		125V	—		—		—	
NK	AC	690V	20/20		—		25/20	
I_{cu}/I_{cs}(sym)		450V	50/50		—		85/50	
		240V	85/85		—		125/125	
	DC	250V	—		—		—	
Weight (◉ marked standard type) kg			9.1	12.3	9.1	12.3	9.1	12.3
■ Connections and Mountings								
Front-connected (FC)	Terminal screws		—		—		—	
	With extension bars		◉		◉		◉	
Rear-connected (RC)	Flat bar studs		○		○		○	
Plug-in (PM) For switchboards	High-performance (PMB)		○ ⑤1		○ ⑤1		○ ⑤1	
	Standard (PMC)		○	—	○	—	○	—
For distribution boards (PMD)			—		—		—	
Flush-mounted (FP)	With flat bar studs		○		○		○	
Draw-out type (DR)			▲		▲		▲	
TemPlug70 (PG)			—		—		—	
DIN rail mount			—		—		—	
■ Accessories (optional)		Symbol						
Externally mounted: Motor operator		M C	●		●		●	
External operating handle	Breaker-mounted	H B	●		●		●	
	Door-mounted (variable depth)	H P	●		●		●	
Toggle extension		H A	●		●		●	
Mechanical interlock ⑨	Slide type	M S	●		●		●	
	Rear-connected type	M B	—		—		—	
	Link type	M L	●		●		●	
	Wire type	M W	●		●		●	
Toggle holder		H H	●		●		●	
Toggle lock		H L						
Terminal cover	For front-connected	C F	●		●		●	
	For rear-connected and plug-in	C R	●		●		●	
Terminal block for lead		T F	●		●		●	
Door flange		D F	●		●		●	
CE marking			Yes		Yes		Yes	
Overcurrent trip mechanism			Electronic ⑯		Electronic ⑯		Electronic ⑯	
Colour of cover			Grey Blue		Grey Blue		Grey Blue	
Trip button (Colour)			Yes (Red)		Yes (Red)		Yes (Red)	
Suitability for isolation			Yes		Yes		Yes	
Reverse connection			Yes		Yes		Yes	

Notes:

◉ : Standard. This configuration used unless otherwise specified. ○ : Optional standard. Specify when ordering.
▲ : Semi-standard. ● : "yes" or "available". — : "no" or "not available".
⑨ : Mechanical interlocks cannot be applied to draw-out type (DR).
⑯ : Optional preferential alarm or ground fault trip function available on request. ⑤1 : A safety lock function is provided.
⑱ : If the ambient temperature exceeds 45° C, reduce the operating current in accordance with 2 Environmental operating conditions of the chapter 8.

Time/Current characteristic curves

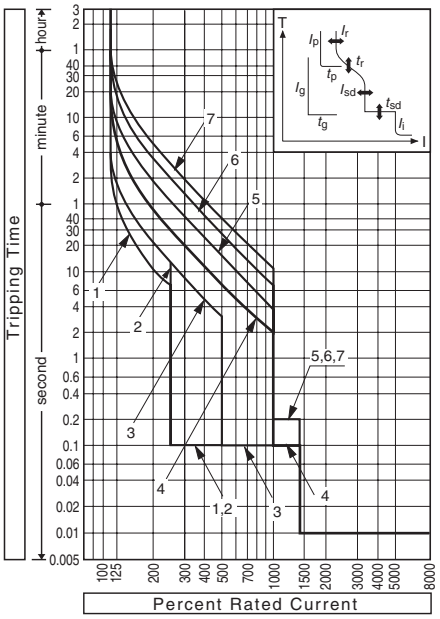

Overcurrent tripping characteristics

Characteristics No.		1	2	3	4	5	6	7
Rated current settings (A) : (I_r)		CT rated current : (I_{CT}) = 800A 350, 400, 450, 500, 600, 700, 800						
Long time-delay time settings (s) : (t_r)		11	21	21	5	10	19	29
		at (I_r)×200%			at (I_r)×600%			
		Setting tolerance ±20%						
Short time-delay pick-up current (A) : (I_{sd})	(I_r)×	2.5	2.5	5	10	10	10	10
		Setting tolerance ±15%						
Short time-delay time settings (s) : (t_{sd})		0.1	0.1	0.1	0.1	0.2	0.2	0.2
		Total clearing time +50ms, resettable time –20ms						
Instantaneous trip pick-up current (A) : (I_i)		(I_r)×1400% Max. (I_{CT})×1200% Setting tolerance ±20%						
Option: Preferential trip alarm	Pick-up current (A) : (I_p)	(I_r)×80% Setting tolerance ±10%						
	Time settings (s) : (t_p)	Definite time-delay characteristic, 40sec. Setting tolerance ±10%						
Ground falut trip	Pick-up current (A) : (I_g)	(I_{CT})×20% Setting tolerance ±15%						
	Time settings (s) : (t_g)	Definite time-delay characteristic, 0.2sec. Total tripping time +50ms, resettable time –20ms.						
Neutral protection	Pick-up current (A) : (I_N)	(I_r)×100% or 50% selectable ②						
	Time settings (s) : (t_N)	(t_N)=(t_r) Same as Long time-delay time settings						

Remark: Characteristic No.4 will be applied as standard setting unless otherwise specified.
Note ②: When (I_r) < (I_{CT}), the pick-up current tolerance becomes large when (I_N)=(I_r)×50% is set.

Combinations of Internally Mounted Accessories (Optional)

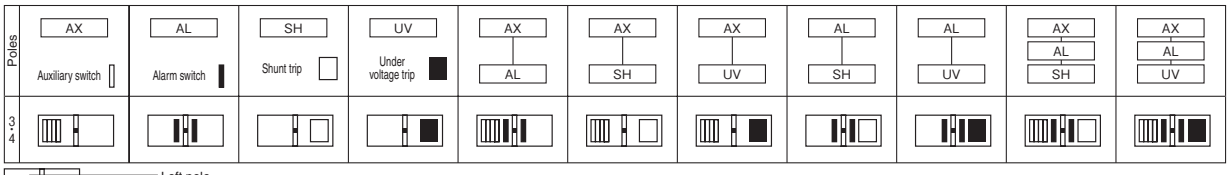

Note: For auxiliary switches or alarm switches, left-hand mounting has priority.

Outline dimensions (mm) S800-NE, S800-RE, S800-PE

Front-connected

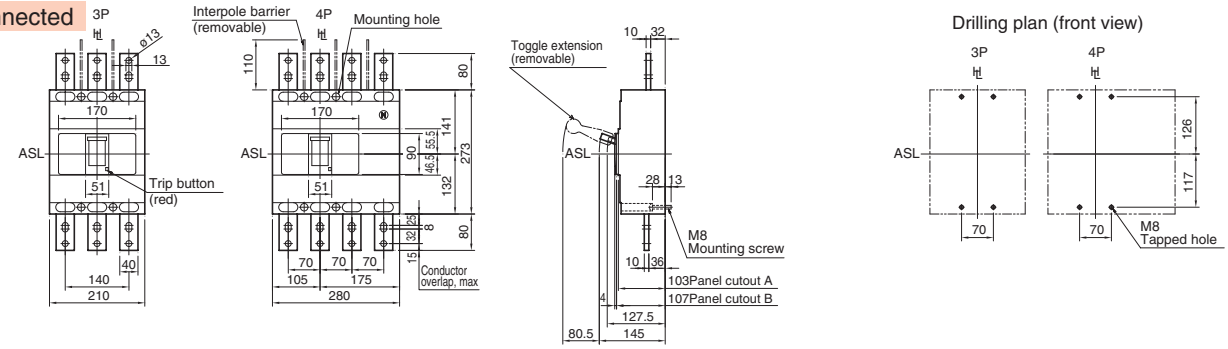

Rear-connected

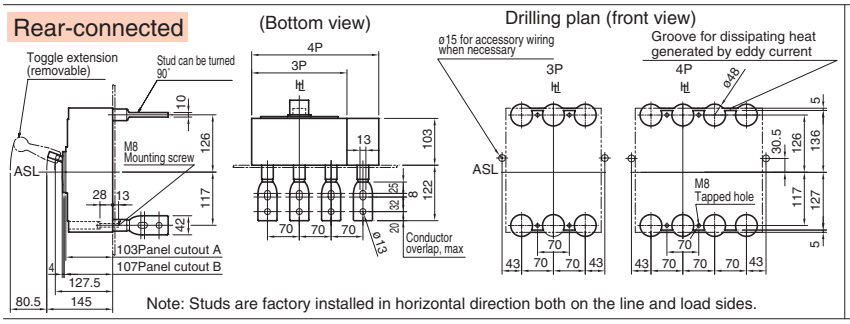

Note: Studs are factory installed in horizontal direction both on the line and load sides.

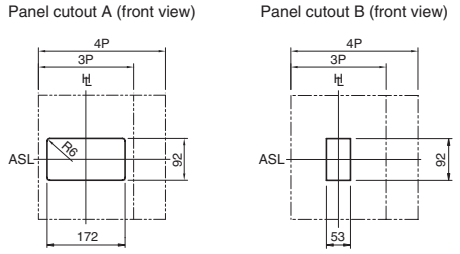

Panel cutout dimensions shown give an allowance of 1.0mm around the handle escutcheon.

Plug-in (Standard)

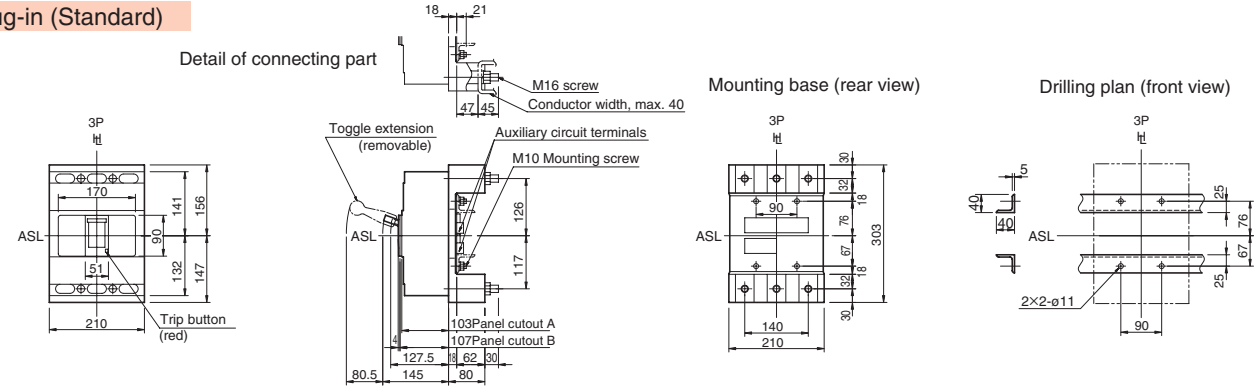

Plug-in (High-performance)

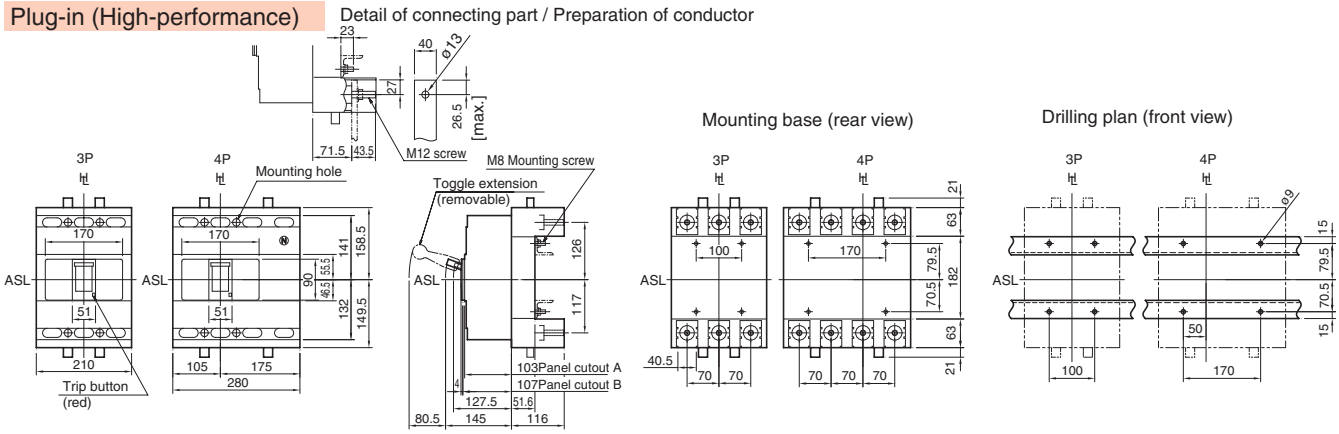

Flush-mounted

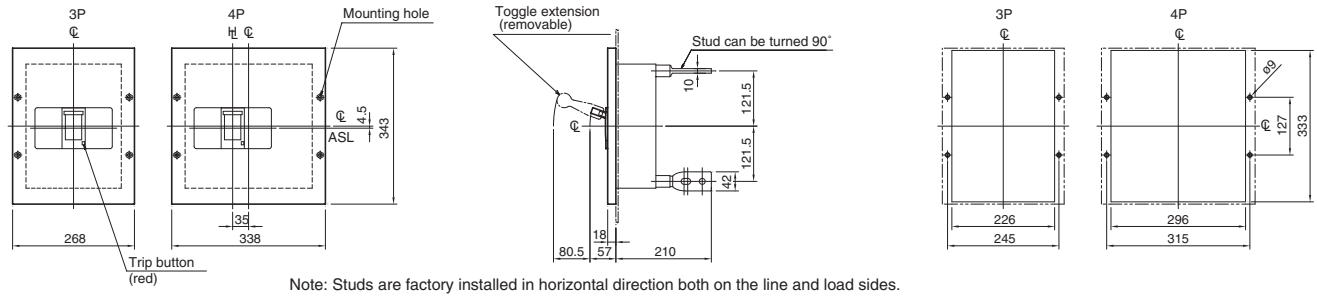

Note: Studs are factory installed in horizontal direction both on the line and load sides.

7 Characteristics and Outline Dimensions TemBreak PRO

Moulded Case Circuit Breakers

H800-NE, L800-NE

Ratings and Specifications

Frame size (A)			800		800			
Type			H800-NE		L800-NE			
Number of poles			3	4	3	4		
■Ratings								
Rated current, A			Adjustable		Adjustable			
Calibrated at 40°C			I_{CT}=800		I_{CT}=800			
45°C			350	600	350	600		
⑱			400	700	400	700		
			450	800	450	800		
			500		500			
Rated insulation voltage〔U_i〕 V			690		690			
Rated impulse withstand voltage〔U_{imp}〕 kV			8		8			
Rated short time withstand current 〔I_{cw}〕 kA			10 (0.3sec.)		10 (0.3sec.)			
Utilization Category			B		B			
■Rated breaking capacity, kA								
JIS C 8201-2-1 Ann.1 Ann.2	AC	690V	25/20		25/20			
IEC 60947-2		500V	45/34		45/34			
I_{cu}/I_{cs}(sym)		440V	125/94		180/135			
		415V	125/94		200/150			
		380V	125/94		200/150			
		240V	150/150		200/150			
	DC	250V	—		—			
		125V	—		—			
NK	AC	690V	25/20		25/20			
I_{cu}/I_{cs}(sym)		450V	125/94		180/135			
		240V	150/150		200/150			
	DC	250V	—		—			
Weight (◉ marked standard type) kg			14.3	20.3	14.3	20.3		
■Connections and Mountings								
Front-connected (FC)	Terminal screws		—		—			
	With extension bars		◉		◉			
Rear-connected (RC)	Flat bar studs		○		○			
Plug-in (PM) For switchboards	High-performance (PMB)		○ ⑤1		○ ⑤1			
	Standard (PMC)		○	—	○	—		
For distribution boards (PMD)			—		—			
Flush-mounted (FP)	With flat bar studs		○		○			
Draw-out type (DR)			—		—			
TemPlug70 (PG)			—		—			
DIN rail mount			—		—			
■Accessories (optional)		Symbol						
Externally mounted: Motor operator		M C	●		●			
External operating handle	Breaker-mounted	H B	●		●			
	Door-mounted (variable depth)	H P	●		●			
Toggle extension		H A	●		●			
Mechanical interlock	Slide type	M S	●		●			
	Rear-connected type	M B	—		—			
	Link type	M L	●		●			
	Wire type	M W	●		●			
Toggle holder		H H	●		●			
Toggle lock		H L						
Terminal cover	For front-connected	C F	●		●			
	For rear-connected and plug-in	C R	●		●			
Terminal block for lead		T F	●		●			
Door flange		D F	●		●			
CE marking			Yes		Yes			
Overcurrent trip mechanism			Electronic ⑯		Electronic ⑯			
Colour of cover			Grey Blue		Grey Blue			
Trip button (Colour)			Yes (Red)		Yes (Red)			
Suitability for isolation			Yes		Yes			
Reverse connection			Yes		Yes			

Notes:

◉ : Standard. This configuration used unless otherwise specified. ○ : Optional standard. Specify when ordering.

▲ : Semi-standard. ● : "yes" or "available". — : "no" or "not available".

⑯ : Optional preferential alarm or ground fault trip function available on request.

⑤1 : A safety lock function is provided.

⑱ : If the ambient temperature exceeds 45° C, reduce the operating current in accordance with 2 Environmental operating conditions of the chapter 8.

Time/Current characteristic curves

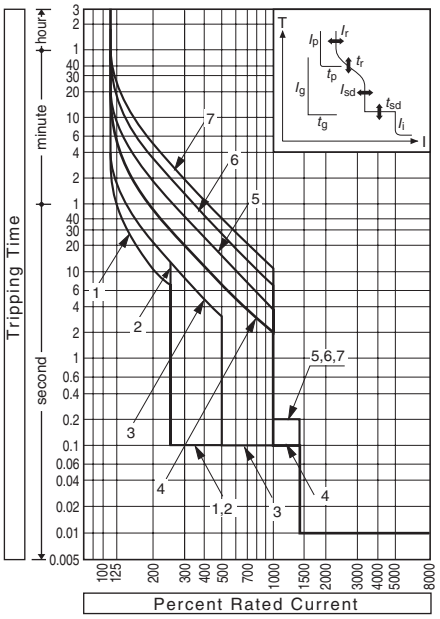

Overcurrent tripping characteristics

Characteristics No.		1	2	3	4	5	6	7
Rated current settings (A) : (I_r)		CT rated current : (I_{CT}) = 800A 350, 400, 450, 500, 600, 700, 800						
Long time-delay time settings (s) : (t_r)		11	21	21	5	10	19	29
		at (I_r)×200%			at (I_r)×600%			
		Setting tolerance ±20%						
Short time-delay pick-up current (A) : (I_{sd})	(I_r)×	2.5	2.5	5	10	10	10	10
		Setting tolerance ±15%						
Short time-delay time settings (s) : (t_{sd})		0.1	0.1	0.1	0.1	0.2	0.2	0.2
		Total clearing time +50ms, resettable time –20ms						
Instantaneous trip pick-up current (A) : (I_i)		(I_r)×1400% Max. (I_{CT})×1200% Setting tolerance ±20%						
Option: Preferential trip alarm	Pick-up current (A) : (I_p)	(I_r)×80% Setting tolerance ±10%						
	Time settings (s) : (t_p)	Definite time-delay characteristic, 40sec. Setting tolerance ±10%						
Ground falut trip	Pick-up current (A) : (I_g)	(I_{CT})×20% Setting tolerance ±15%						
	Time settings (s) : (t_g)	Definite time-delay characteristic, 0.2sec. Total tripping time +50ms, resettable time –20ms.						
Neutral protection	Pick-up current (A) : (I_N)	(I_r)×100% or 50% selectable ②						
	Time settings (s) : (t_N)	(t_N)=(t_r) Same as Long time-delay time settings						

Remark: Characteristic No.4 will be applied as standard setting unless otherwise specified.

Note ②: When (I_r) < (I_{CT}), the pick-up current tolerance becomes large when (I_N)=(I_r)×50% is set.

Combinations of Internally Mounted Accessories (Optional)

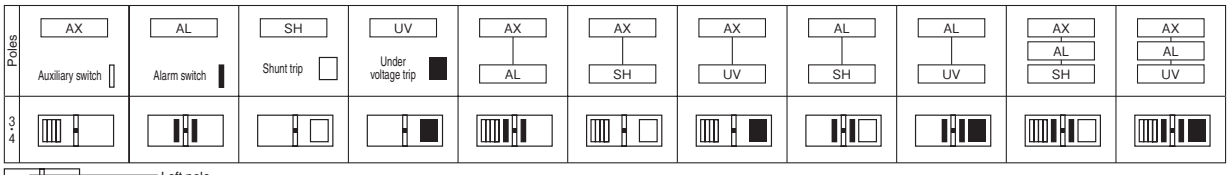

Note: For auxiliary switches or alarm switches, left-hand mounting has priority.

Outline dimensions (mm) H800-NE, L800-NE

Front-connected

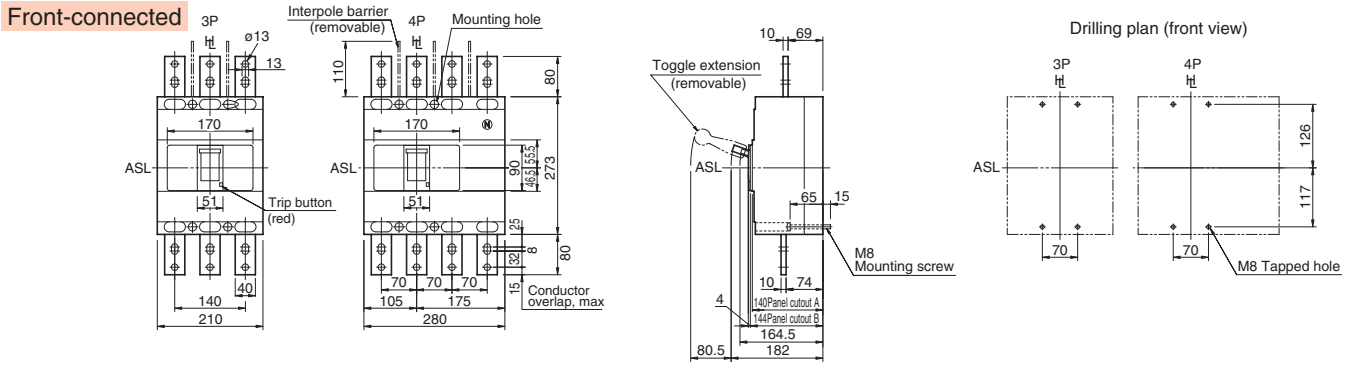

Rear-connected

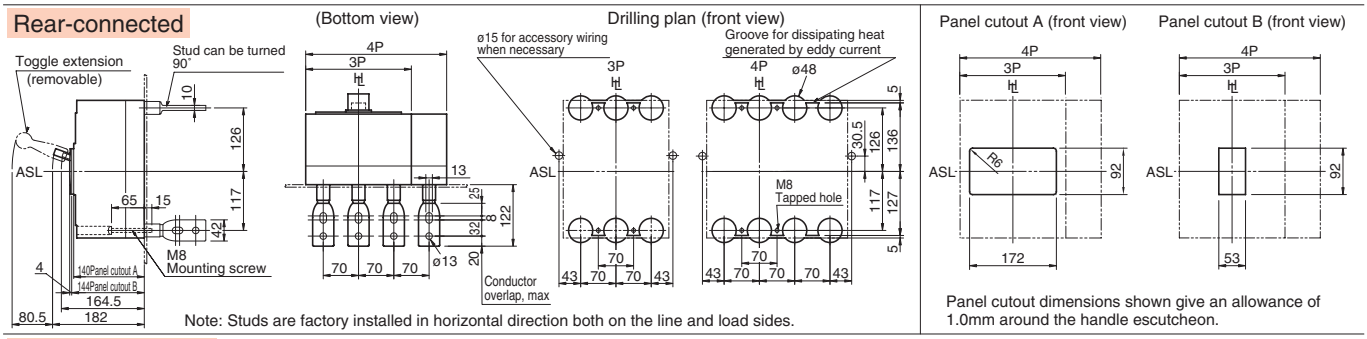

Note: Studs are factory installed in horizontal direction both on the line and load sides.

Panel cutout dimensions shown give an allowance of 1.0mm around the handle escutcheon.

Plug-in (Standard)

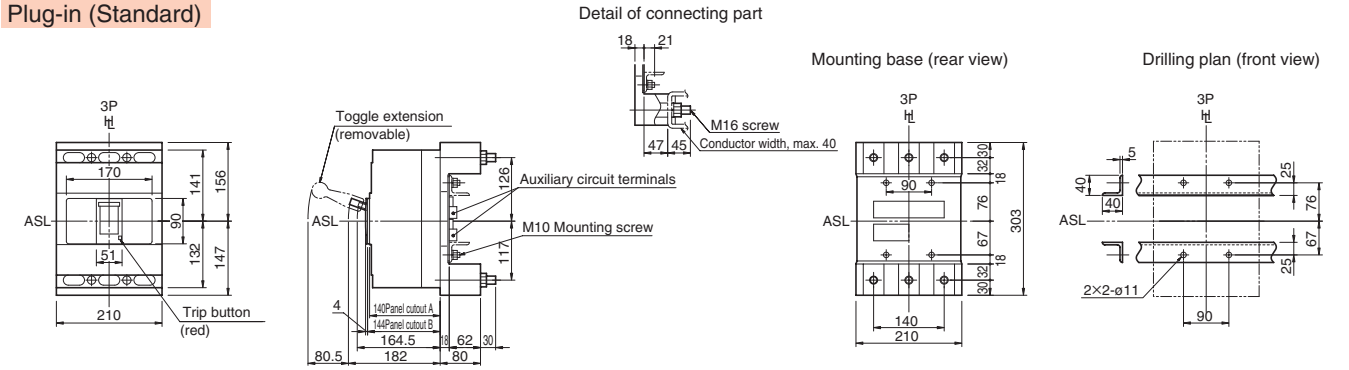

Plug-in (High-performance)

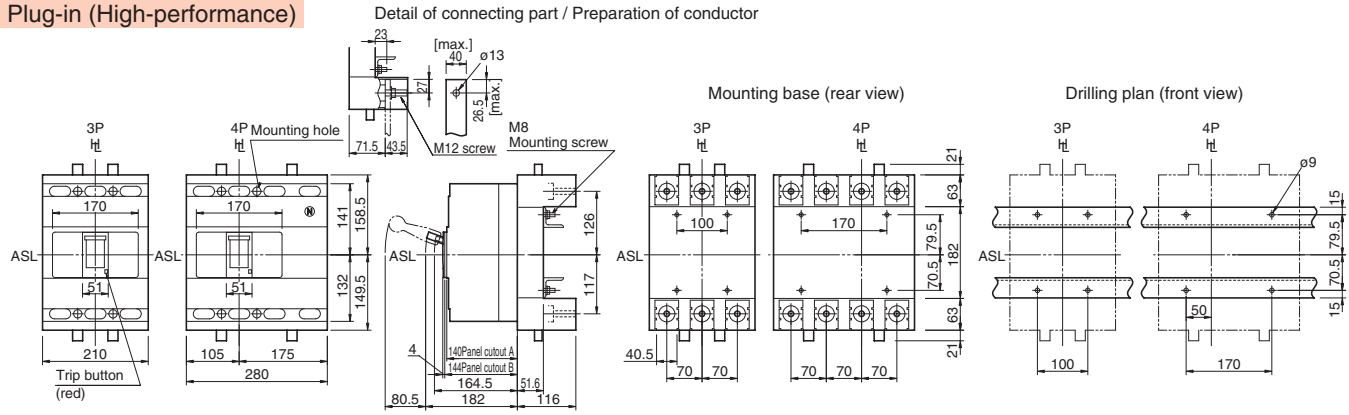

Flush-mounted

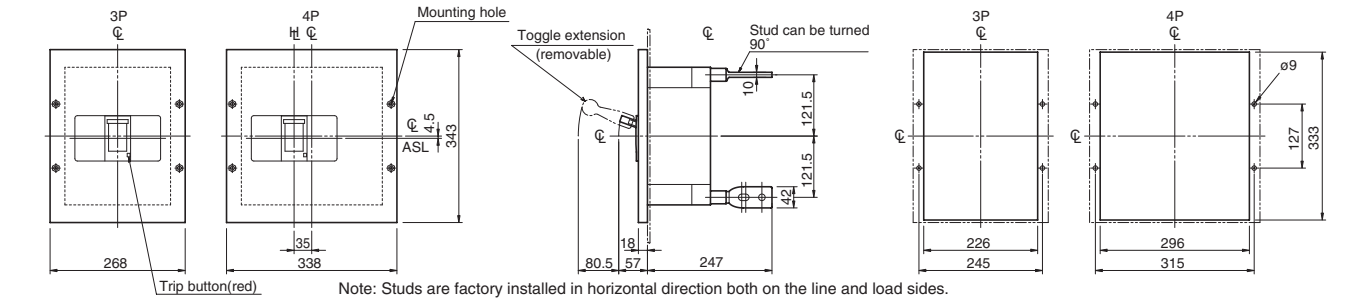

Note: Studs are factory installed in horizontal direction both on the line and load sides.

7 Characteristics and Outline Dimensions

TemBreak PRO

Moulded Case Circuit Breakers

S1000-CE

Ratings and Specifications

Frame size (A)			1000			
Type			**S1000-CE**			
Number of poles			3	4		
■ Ratings						
Rated current, A			Adjustable			
Calibrated at 40°C			I_{CT}=1000			
45°C			400	800		
⑱			500	900		
			600	1000		
			700			
Rated insulation voltage〔U_i〕 V			690			
Rated impulse withstand voltage〔U_{imp}〕 kV			8			
Rated short time withstand current 〔I_{cw}〕 kA			—			
Utilization Category			A			
■ Rated breaking capacity, kA						
JIS C 8201-2-1 Ann.1 Ann.2	AC	690V	25/19			
IEC 60947-2		500V	45/34			
I_{cu}/I_{cs}(sym)		440V	65/50			
		415V	65/50			
		380V	85/50			
		240V	100/75			
	DC	250V	—			
		125V	—			
NK	AC	690V	—			
I_{cu}/I_{cs}(sym)		450V	—			
		240V	—			
	DC	250V	—			
Weight (◉ marked standard type) kg			11.0	14.8		
■ Connections and Mountings						
Front-connected (FC)	Terminal screws		—			
	With extension bars		◉			
Rear-connected (RC)	Flat bar studs		○			
Plug-in (PM) For switchboards	High-performance (PMB)		—			
	Standard (PMC)		—			
For distribution boards (PMD)			—			
lush-mounted (FP)	With flat bar studs		○			
Draw-out type (DR)			—			
TemPlug70 (PG)			—			
DIN rail mount			—			
■ Accessories (optional)			**Symbol**			
Externally mounted: Motor operator			M C	●		
External operating handle	Breaker-mounted		H B	●		
	Door-mounted (variable depth)		H P	●		
Toggle extension			H A	●		
Mechanical interlock	Slide type		M S	●		
	Rear-connected type		M B	—		
	Link type		M L	●		
	Wire type		MW	●		
Toggle holder			H H	●		
Toggle lock			H L			
Terminal cover	For front-connected		C F	●		
	For rear-connected and plug-in		C R	●		
Terminal block for lead			T F	●		
Door flange			D F	●		
CE marking			Yes			
Overcurrent trip mechanism			Electronic ⑯			
Colour of cover			Grey Blue			
Trip button (Colour)			Yes (Red)			
Suitability for isolation			Yes			
Reverse connection			Yes			

Notes:

◉ : Standard. This configuration used unless otherwise specified. ○ : Optional standard. Specify when ordering.

▲ : Semi-standard. ● : "yes" or "available". — : "no" or "not available".

⑯ : Optional preferential alarm or ground fault trip function available on request.

⑱ : If the ambient temperature exceeds 45° C, reduce the operating current in accordance with 2 Environmental operating conditions of the chapter 8.

Time/Current characteristic curves

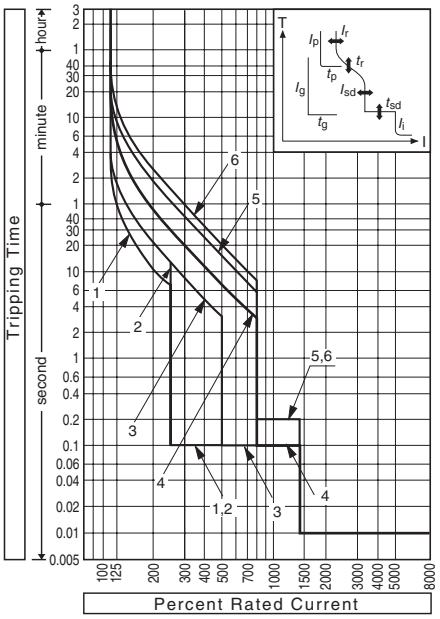

Overcurrent tripping characteristics

Characteristics No.		1	2	3	4	5	6
Rated current settings (A) : (I_r)		CT rated current : (I_{CT}) = 1000A 400, 500, 600, 700, 800, 900,1000					
Long time-delay time settings (s) : (t_r)		11	21	21	5	10	16
		at (I_r)×200%			at (I_r)×600%		
		Setting tolerance ±20%					
Short time-delay pick-up current (A) : (I_{sd})	(I_r)×	2.5	2.5	5	8	8	8
		Setting tolerance ±15%					
Short time-delay time settings (s) : (t_{sd})		0.1	0.1	0.1	0.1	0.2	0.2
		Total clearing time +50ms, resettable time –20ms					
Instantaneous trip pick-up current (A) : (I_i)		(I_r)×1400% Max. (I_{CT})×1000% Setting tolerance ±20%					
Option: Preferential trip alarm	Pick-up current (A) : (I_p)	(I_r)×80% Setting tolerance ±10%					
	Time settings (s) : (t_p)	Definite time-delay characteristic, 40sec. Setting tolerance ±10%					
Ground falut trip	Pick-up current (A) : (I_g)	(I_{CT})×20% Setting tolerance ±15%					
	Time settings (s) : (t_g)	Definite time-delay characteristic, 0.2sec. Total tripping time +50ms, resettable time –20ms.					
Neutral protection	Pick-up current (A) : (I_N)	(I_r)×100% or 50% selectable ②					
	Time settings (s) : (t_N)	(t_N)=(t_r) Same as Long time-delay time settings					

Remark: Characteristic No.4 will be applied as standard setting unless otherwise specified.

Note ②: When (I_r) < (I_{CT}), the pick-up current tolerance becomes large when (I_N)=(I_r)×50% is set.

Combinations of Internally Mounted Accessories (Optional)

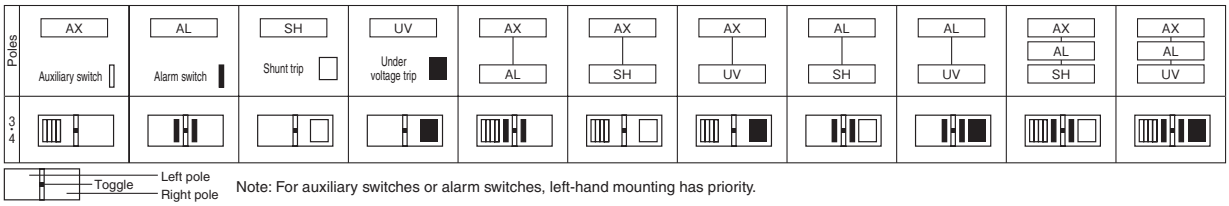

Note: For auxiliary switches or alarm switches, left-hand mounting has priority.

Outline dimensions (mm) S1000-CE

Front-connected

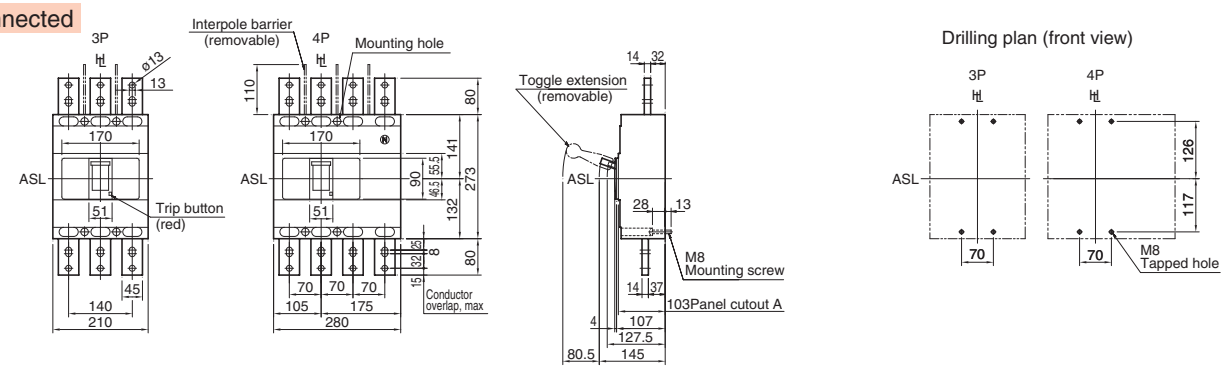

Rear-connected

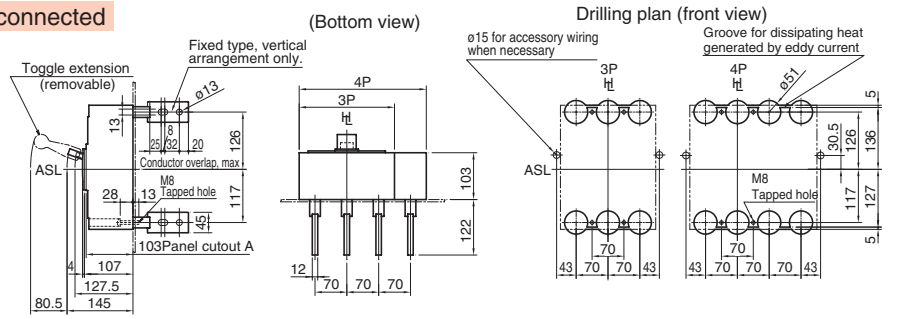

Panel cutout A (front view)

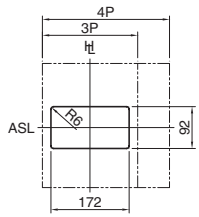

Panel cutout dimensions shown give an allowance of 1.0mm around the handle escutcheon.

Flush-mounted

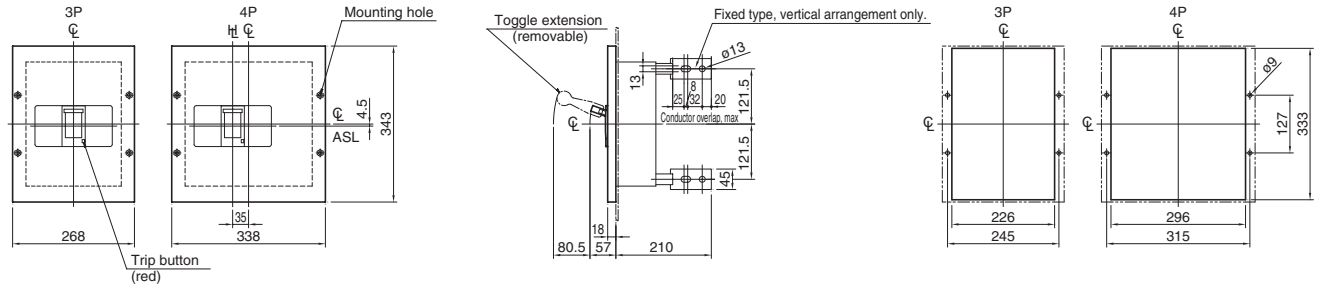

7 Characteristics and Outline Dimensions TemBreak PRO

Moulded Case Circuit Breakers

S1250-NE, S1250-GE

Ratings and Specifications

Frame size (A)			1250		1250			
Type			**S1250-NE**		**S1250-GE**			
Number of poles			3	4	3	4		
■ Ratings								
Rated current, A			Adjustable		Adjustable			
Calibrated at 40°C			I_{CT}=1250		I_{CT}=1250			
45°C			500	1000	500	1000		
⑱			600	1200	600	1200		
			700	1250	700	1250		
			800		800			
Rated insulation voltage〔U_i〕 V			690		690			
Rated impulse withstand voltage〔U_{imp}〕 kV			8		8			
Rated short time withstand current 〔I_{cw}〕 kA			15(0.3sec.)		15(0.3sec.)			
Utilization Category			B		B			
■ Rated breaking capacity, kA								
JIS C 8201-2-1 Ann.1 Ann.2	AC	690V	25/20		45/34			
IEC 60947-2		500V	45/34		65/50			
I_{cu}/I_{cs}(sym)		440V	65/50		85/65			
		415V	70/50		85/65			
		380V	85/65		100/75			
		240V	100/75		125/94			
	DC	250V	—		—			
		125V	—		—			
NK	AC	690V	25/20		45/34			
I_{cu}/I_{cs}(sym)		450V	65/50		85/65			
		240V	100/75		125/94			
	DC	250V	—		—			
Weight (◉ marked standard type) kg			19.8	25.0	19.8	25.0		
■ Connections and Mountings								
Front-connected (FC)	Terminal screws		—		—			
	With extension bars		◉		◉			
Rear-connected (RC)	Flat bar studs		○		○			
Plug-in (PM) For switchboards	High-performance (PMB)		—		—			
	Standard (PMC)		○		○			
For distribution boards (PMD)			—		—			
Flush-mounted (FP)	With flat bar studs		○		○			
Draw-out type (DR)			▲		▲			
TemPlug70 (PG)			—		—			
DIN rail mount			—		—			
■ Accessories (optional)		Symbol						
Externally mounted: Motor operator		M C	●		●			
External operating handle	Breaker-mounted	H B	●		●			
	Door-mounted (variable depth)	H P	●		●			
Toggle extension		H A	● ㉔		● ㉔			
Mechanical interlock ⑨	Slide type	M S	●		●			
	Rear-connected type	M B	●		●			
	Link type	M L	—		—			
	Wire type	M W	●		●			
Toggle holder		H H	●		●			
Toggle lock		H L						
Terminal cover	For front-connected	C F	●		●			
	For rear-connected and plug-in	C R	—		—			
Terminal block for lead		T F	●		●			
Door flange		D F	●		●			
CE marking			Yes		Yes			
Overcurrent trip mechanism			Electronic ⑯		Electronic ⑯			
Colour of cover			Grey Blue		Grey Blue			
Trip button (Colour)			Yes (Red)		Yes (Red)			
Suitability for isolation			Yes		Yes			
Reverse connection			Yes		Yes			

Notes:

◉ : Standard. This configuration used unless otherwise specified. ○ : Optional standard. Specify when ordering.
▲ : Semi-standard. ● : "yes" or "available". — : "no" or "not available".
⑨ : Mechanical interlocks cannot be applied to draw-out type (DR).
⑯ : Optional preferential alarm or ground fault trip function available on request.
㉔ : One is supplied with every five breakers. Please specify if more are required.
⑱ : If the ambient temperature exceeds 45° C, reduce the operating current in accordance with 2 Environmental operating conditions of the chapter 8.

Time/Current characteristic curves

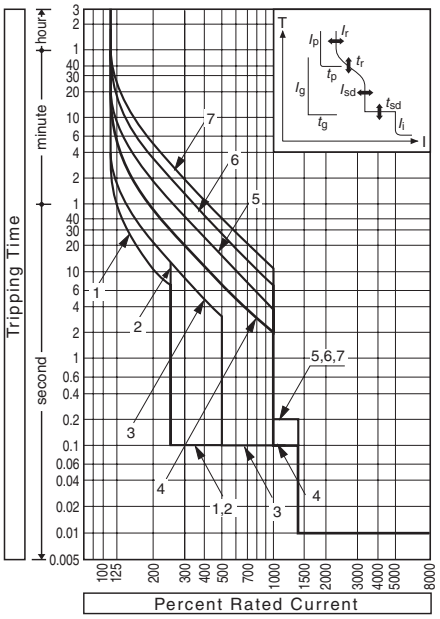

Overcurrent tripping characteristics

Characteristics No.		1	2	3	4	5	6	7
Rated current settings (A) : (I_r)		CT rated current : (I_{CT}) = 1250A 500, 600, 700, 800, 1000, 1200, 1250						
Long time-delay time settings (s) : (t_r)		11	21	21	5	10	19	29
		at (I_r)×200%			at (I_r)×600%			
		Setting tolerance ±20%						
Short time-delay pick-up current (A) : (I_{sd})	(I_r)×	2.5	2.5	5	10	10	10	10
		Setting tolerance ±15%						
Short time-delay time settings (s) : (t_{sd})		0.1	0.1	0.1	0.1	0.2	0.2	0.2
		Total clearing time +50ms, resettable time –20ms						
Instantaneous trip pick-up current (A) : (I_i)		(I_r)×1400% Max.(I_{CT})×1200% Setting tolerance ±20%						
Option: Preferential trip alarm	Pick-up current (A) : (I_p)	(I_r)×80% Setting tolerance ±10%						
	Time settings (s) : (t_p)	Definite time-delay characteristic, 40sec. Setting tolerance ±10%						
Ground falut trip	Pick-up current (A) : (I_g)	(I_{CT})×20% Setting tolerance ±15%						
	Time settings (s) : (t_g)	Definite time-delay characteristic, 0.2sec. Total tripping time +50ms, resettable time –20ms.						
Neutral protection	Pick-up current (A) : (I_N)	(I_r)×100% or 50% selectable ②						
	Time settings (s) : (t_N)	(t_N)=(t_r) Same as Long time-delay time settings						

Remark: Characteristic No.4 will be applied as standard setting unless otherwise specified.
Note ②: When (I_r) < (I_{CT}), the pick-up current tolerance becomes large when (I_N)=(I_r)×50% is set.

Combinations of Internally Mounted Accessories (Optional)

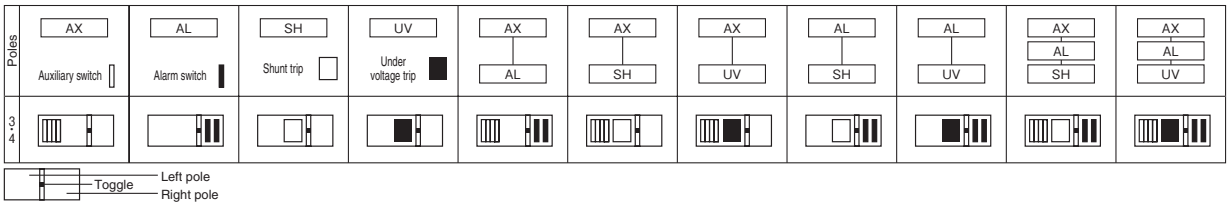

Outline dimensions (mm) S1250-NE, S1250-GE

Front-connected

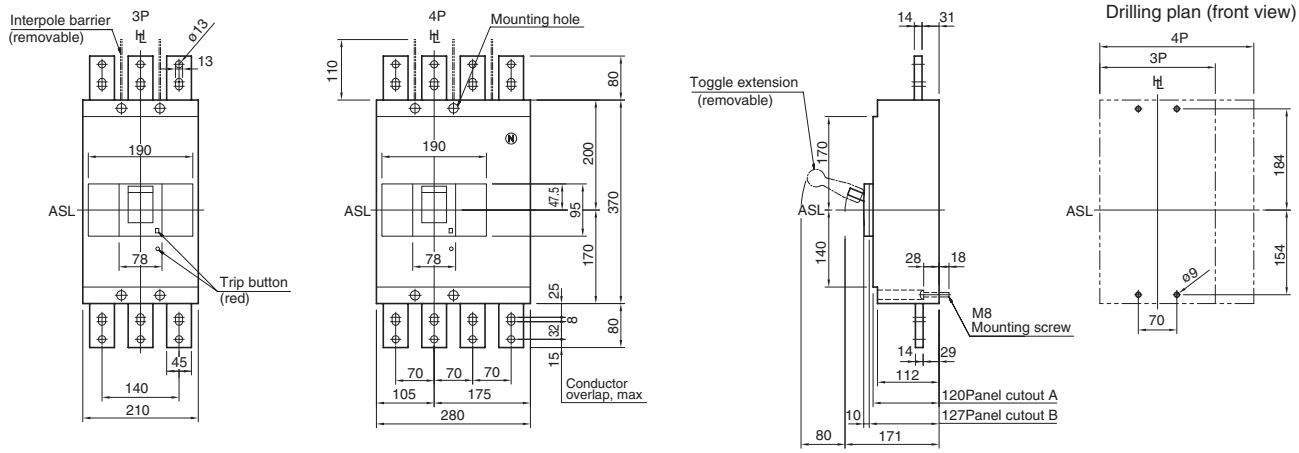

Rear-connected

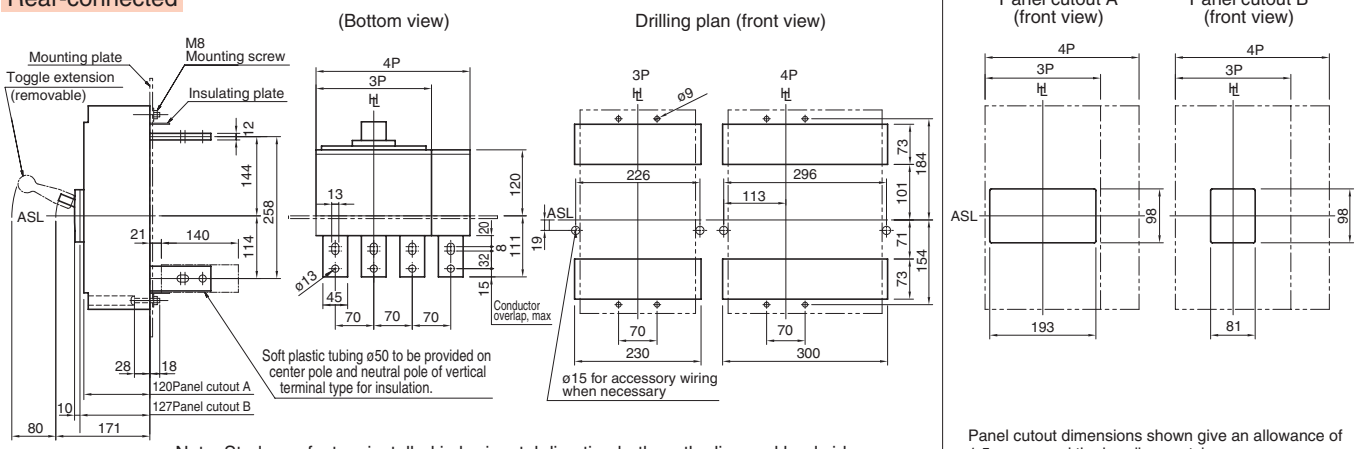

Note: Studs are factory installed in horizontal direction both on the line and load sides.

Panel cutout dimensions shown give an allowance of 1.5mm around the handle escutcheon.

Plug-in(Standard)

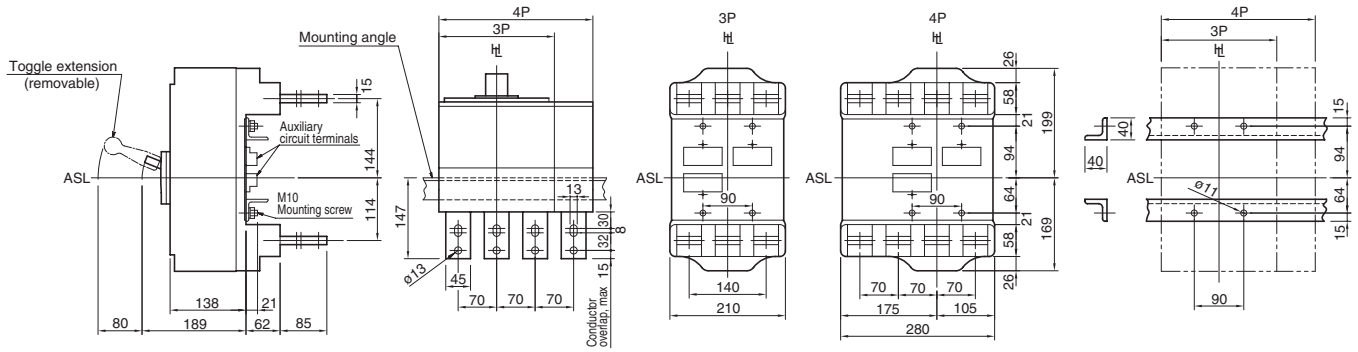

Flush-mounted

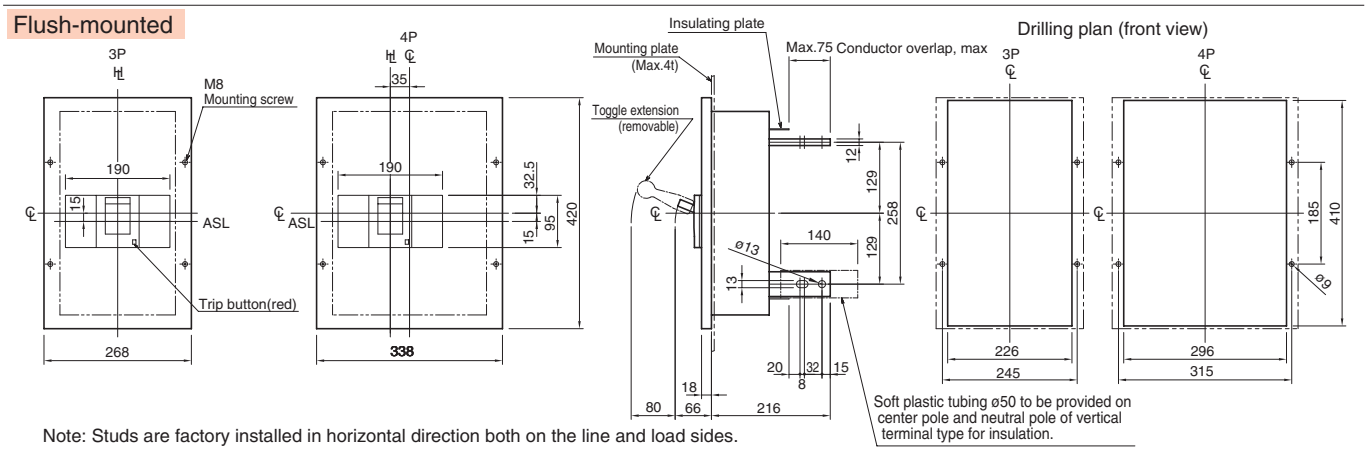

Note: Studs are factory installed in horizontal direction both on the line and load sides.

7 Characteristics and Outline Dimensions

Moulded Case Circuit Breakers

TL-1000NE, TL-1200NE

Ratings and Specifications

Frame size (A)			1000		1200	
Type			TL-1000NE		TL-1200NE	
Number of poles			3	4	3	4
■ Ratings						
Rated current, A			Adjustable		Adjustable	
Calibrated at 40°C			I_{CT}=1000		I_{CT}=1250	
45°C			500	800	600	1000
㊽			600	900	700	1200
			700	1000	800	
Rated insulation voltage〔U_i〕 V			690		690	
Rated impulse withstand voltage〔U_{imp}〕 kV			8		8	
Rated short time withstand current 〔I_{cw}〕 kA			15 (0.3sec.)		15(0.3sec.)	
Utilization Category			B		B	
■ Rated breaking capacity, kA						
JIS C 8201-2-1 Ann.1 Ann.2 ㊾	AC	690V	45/34		45/34	
IEC 60947-2		500V	75/57		75/57	
I_{cu}/I_{cs}(sym)		440V	125/65		125/65	
		415V	125/65		125/65	
		380V	125/65		125/65	
		240V	150/113		150/113	
	DC	250V	—		—	
		125V	—		—	
NK	AC	690V	—		—	
I_{cu}/I_{cs}(sym)		450V	125/— ㉓		125/— ㉓	
		240V	—		—	
	DC	250V	—		—	
Weight (◉ marked standard type) kg			26.0	33.7	26.0	33.7
■ Connections and Mountings						
Front-connected (FC)	Terminal screws		—		—	
	With extension bars		◉		◉	
Rear-connected (RC)	Flat bar studs		○		○	
Plug-in (PM) For switchboards	High-performance (PMB)		—		—	
	Standard (PMC)		○		○	
For distribution boards (PMD)			—		—	
Flush-mounted (FP)	With flat bar studs		○		○	
Draw-out type (DR)			▲		▲	
TemPlug70 (PG)			—		—	
DIN rail mount			—		—	
■ Accessories (optional)		Symbol				
Externally mounted: Motor operator		M C	●		●	
External operating handle	Breaker-mounted	H B	●		●	
	Door-mounted (variable depth)	H P	●		●	
Toggle extension		H A	● ㉔		● ㉔	
Mechanical interlock ⑨	Slide type	M S	●		●	
	Rear-connected type	M B	●		●	
	Link type	M L	—		—	
	Wire type	MW	—		—	
Toggle holder		H H	●		●	
Toggle lock		H L				
Terminal cover	For front-connected	C F	—		—	
	For rear-connected and plug-in	C R	—		—	
Terminal block for lead		T F	●		●	
Door flange		D F	●		●	
CE marking			Yes		Yes	
Overcurrent trip mechanism			Electronic ⑯		Electronic ⑯	
Colour of cover			Black		Black	
Trip button (Colour)			Yes (Brown)		Yes (Brown)	
Suitability for isolation			Yes		Yes	
Reverse connection			Yes		Yes	

Notes:

◉ : Standard. This configuration used unless otherwise specified. ○ : Optional standard. Specify when ordering. ▲ : Semi-standard. ● : "yes" or "available". — : "no" or "not available".

⑨ : Mechanical interlocks cannot be applied to draw-out type (DR). ⑯ : Optional preferential alarm or ground fault trip function available on request. ㉓ : This is the value for 460V AC. ㉔ : One is supplied with every five breakers. Please specify if more are required. ㊾ : TL-1000NE and TL-1200NE are JIS C 8201-2-1 Ann.2 compliant. ㊽ : If the ambient temperature exceeds 45°C, reduce the operating current in accordance with 2 Environmental operating conditions of the chapter 8.

Time/Current characteristic curves

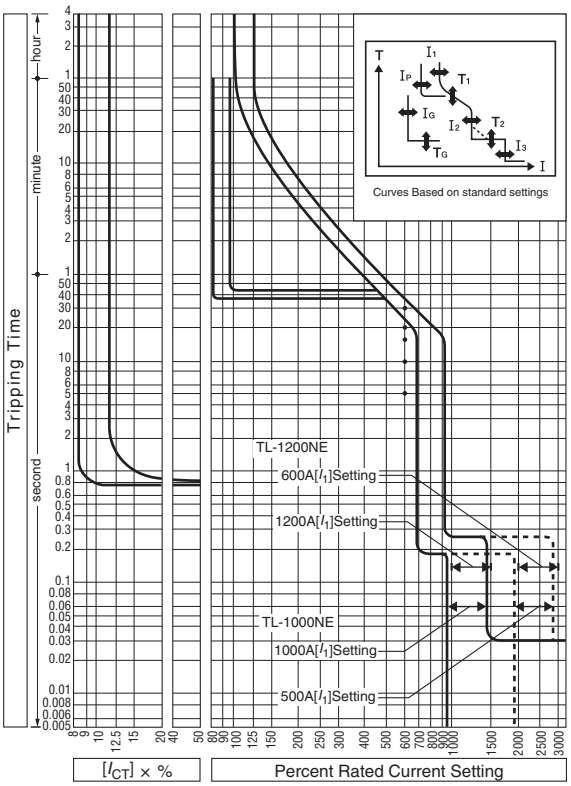

Overcurrent tripping characteristics

Type	TL-1000NE	TL-1200NE
CT rated current(A) : (I_{CT})	1000	1250
Rated current settings (A) : (I_1) (adjustable)	500, 600, 700 800, 900, 1000	600, 700, 800 1000, 1200
Long time-delay time settings (S) : (T_1)	(5–10–15–20–30) at (I_1)×600% current adjustable Setting tolerance ±20%	
Short time-delay pick-up current (A) : (I_2)	(I_1)×200, 400, 600, 800, 1000% adjustable Setting tolerance ±15%	
Short time-delay time settings (S) : (T_2)	Opening time (0.1, 0.15, 0.2, 0.25, 0.3) in the definite time-delay. Total clearing time is +50ms and resettable time –20ms for the time-delay settings	
Instantaneous trip pick-up current (A) : (I_3)	Continuously adjustable from (I_{CT})×300 to 1200% Setting tolerance ±20%	
Preferential trip alarm pick-up current (A) : (I_p) (optional)	(I_1)×70, 80, 90, 100% adjustable Setting tolerance ±10%	
Preferential trip alarm time setting (S) : (T_p) (optional)	40 fixed definite time-delay. Setting tolerance ±10%	
Ground fault trip pick-up current (A) : (I_G) (optional) ⑬	Continuously adjustable from (I_{CT})×10 to 40% Setting tolerance ±15%	
Ground fault trip time settings (S) : (T_G) (optional) ⑬	Opening time (0.1, 0.2, 0.3, 0.4, 0.8) in the definite time- delay. Total clearing time is +50ms and resettable time –20ms for the time-delay settings	

Remark: If not otherwise specified, the product will be delivered with the underlined standard setting values.

Note ⑬: Cannot be used with the preferential trip alarm.

Combinations of Internally Mounted Accessories (Optional)

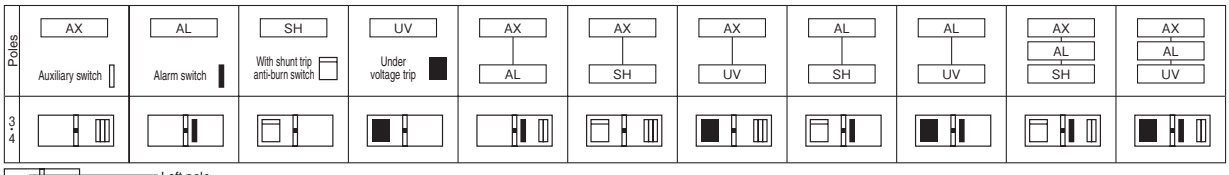

Note: With AC UVT, the UVT controller is externally mounted. See page 6-25.

Outline dimensions (mm) TL-1000NE, TL-1200NE

Front-connected

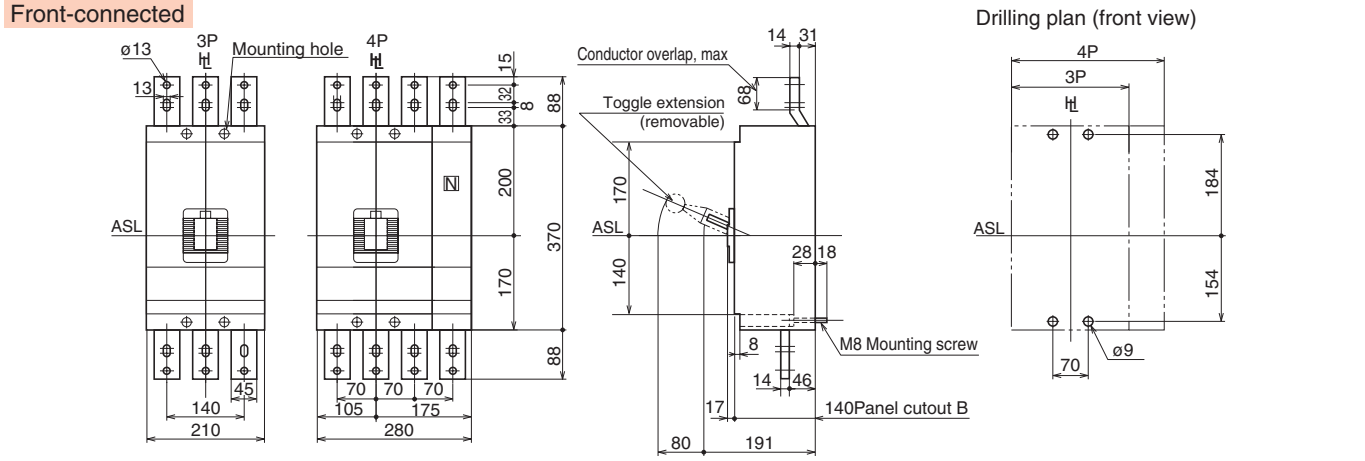

Rear-connected

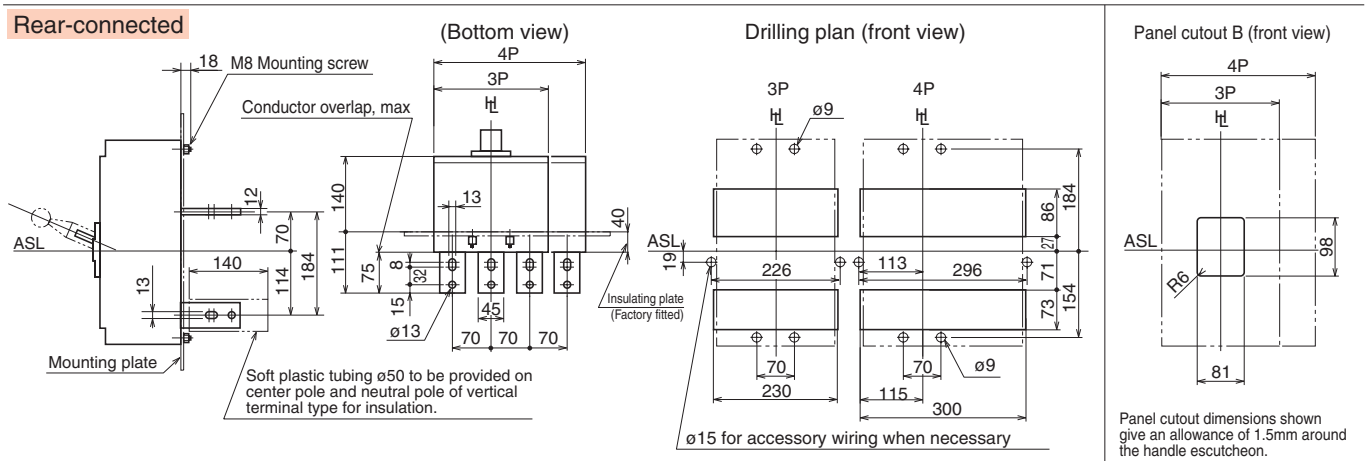

Note: Studs are factory installed in horizontal direction both on the line and load sides.

Plug-in (Standard)

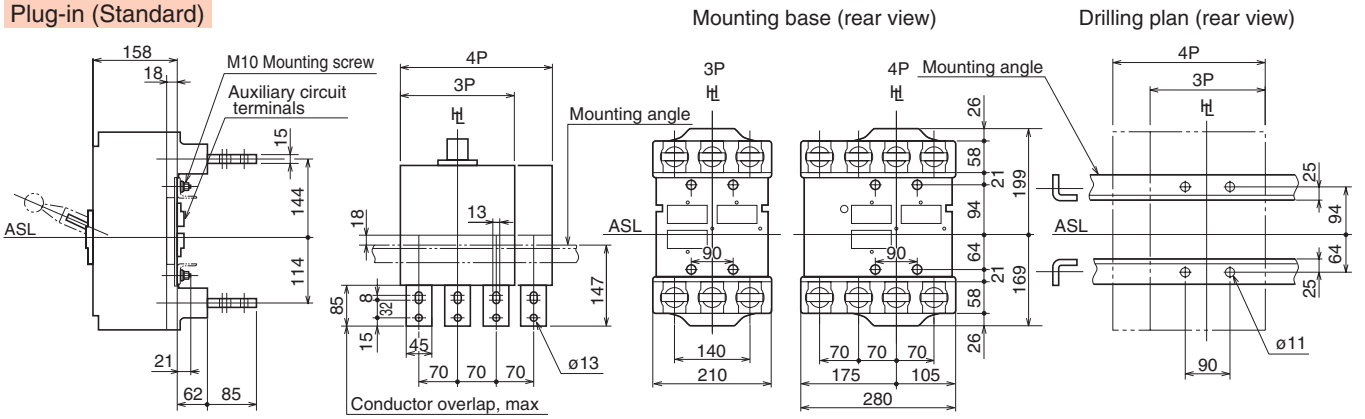

Flush-mounted

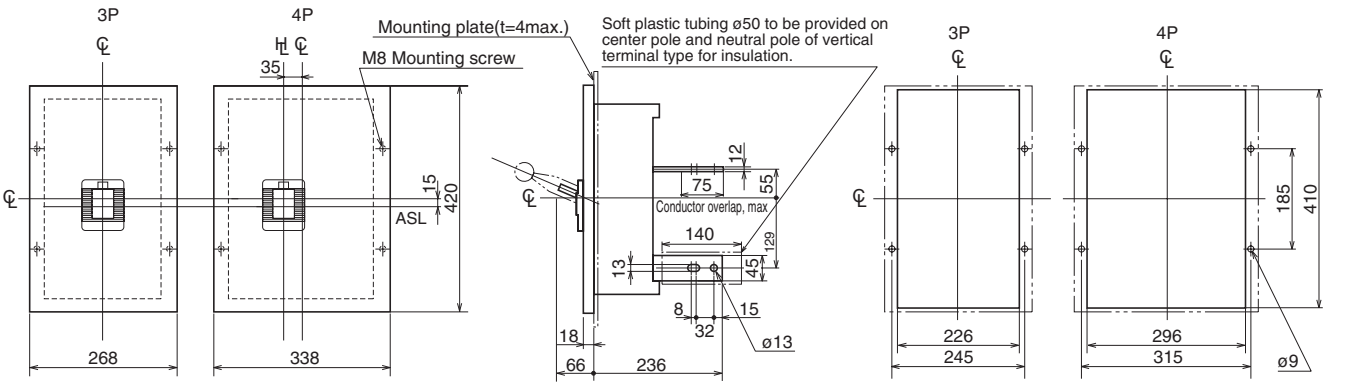

Note: Studs are factory installed in horizontal direction both on the line and load sides.

7 Characteristics and Outline Dimensions TemBreak PRO

Moulded Case Circuit Breakers

S1600-NE

Ratings and Specifications

Frame size (A)			1600	
Type			**S1600-NE**	
Number of poles			3	4
■ Ratings				
Rated current, A			Adjustable	
Calibrated at 40°C			I_{CT}=1600	
45°C			700	1200
⑱			800	1400
			900	1500
			1000	1600
Rated insulation voltage〔U_i〕 V			690	
Rated impulse withstand voltage〔U_{imp}〕 kV			8	
Rated short time withstand current 〔I_{cw}〕 kA			20(0.3sec.)	
Utilization Category			B	
■ Rated breaking capacity, kA				
JIS C 8201-2-1 Ann.1 Ann.2	AC	690V	45/34	
IEC 60947-2		500V	65/50	
I_{cu}/I_{cs}(sym)		440V	85/65	
		415V	85/65	
		380V	100/75	
		240V	125/94	
	DC	250V	—	
		125V	—	
NK	AC	690V	—	
I_{cu}/I_{cs}(sym)		450V	—	
		240V	—	
	DC	250V	—	
Weight (◉ marked standard type) kg			27.0	35.0
■ Connections and Mountings				
Front-connected (FC)	Terminal screws		—	
	With extension bars		○	
Rear-connected (RC)	Flat bar studs		◉	
Plug-in (PM) For switchboards	High-performance (PMB)		—	
	Standard (PMC)		—	
For distribution boards (PMD)			—	
lush-mounted (FP)	With flat bar studs		○	
Draw-out type (DR)			○	
TemPlug70 (PG)			—	
DIN rail mount			—	
■ Accessories (optional)		Symbol		
Externally mounted: Motor operator		M C	●	
External operating handle	Breaker-mounted	H B	●	
	Door-mounted (variable depth)	H P	●	
Toggle extension		H A	● ㉔	
Mechanical interlock ⑨	Slide type	M S	●	
	Rear-connected type	M B	●	
	Link type	M L	—	
	Wire type	MW	●	
Toggle holder		H H	●	
Toggle lock		H L		
Terminal cover	For front-connected	C F	—	
	For rear-connected and plug-in	C R	—	
Terminal block for lead		T F	●	
Door flange		D F	●	
CE marking			Yes	
Overcurrent trip mechanism			Electronic ⑯	
Colour of cover			Grey Blue	
Trip button (Colour)			Yes (Red)	
Suitability for isolation			Yes	
Reverse connection			Yes	

Notes:

◉ : Standard. This configuration used unless otherwise specified. ○ : Optional standard. Specify when ordering.
▲ : Semi-standard. ● : "yes" or "available". — : "no" or "not available".
⑨ : Mechanical interlocks cannot be applied to draw-out type (DR).
⑯ : Optional preferential alarm or ground fault trip function available on request.
㉔ : One is supplied with every five breakers. Please specify if more are required.
⑱ : If the ambient temperature exceeds 45° C, reduce the operating current in accordance with 2 Environmental operating conditions of the chapter 8.

Time/Current characteristic curves

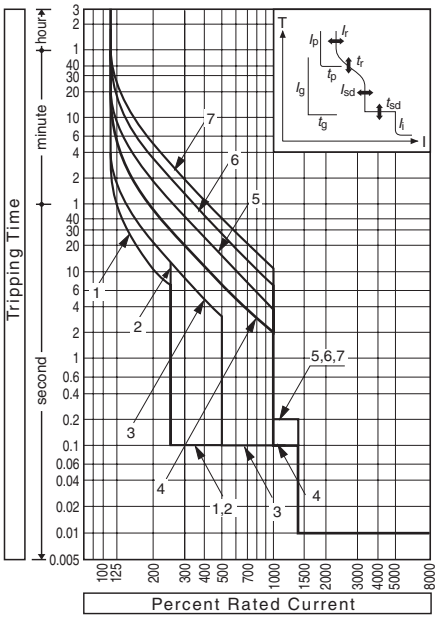

Overcurrent tripping characteristics

Characteristics No.		1	2	3	4	5	6	7
Rated current settings (A) : (I_r)		CT rated current : (I_{CT}) = 1600A 700, 800, 900, 1000, 1200, 1400, 1500, 1600						
Long time-delay time settings (s) : (t_r)		11	21	21	5	10	19	29
		at (I_r)×200%			at (I_r)×600%			
		Setting tolerance ±20%						
Short time-delay pick-up current (A) : (I_{sd})	(I_r)×	2.5	2.5	5	10	10	10	10
		Setting tolerance ±15%						
Short time-delay time settings (s) : (t_{sd})		0.1	0.1	0.1	0.1	0.2	0.2	0.2
		Total clearing time +50ms, resettable time –20ms						
Instantaneous trip pick-up current (A) : (I_i)		(I_r)×1400% Max.(I_{CT})×1200% Setting tolerance ±20%						
Option: Preferential trip alarm								
Pick-up current (A) : (I_p)		(I_r)×80% Setting tolerance ±10%						
Time settings (s) : (t_p)		Definite time-delay characteristic, 40sec. Setting tolerance ±10%						
Ground falut trip								
Pick-up current (A) : (I_g)		(I_{CT})×20% Setting tolerance ±15%						
Time settings (s) : (t_g)		Definite time-delay characteristic, 0.2sec. Total tripping time +50ms, resettable time –20ms.						
Neutral protection								
Pick-up current (A) : (I_N)		(I_r)×100%or 50% selectable ②						
Time settings (s) : (t_N)		(t_N)=(t_r) Same as Long time-delay time settings						

Remark: Characteristic No.4 will be applied as standard setting unless otherwise specified.
Note ②: When (I_r) < (I_{CT}), the pick-up current tolerance becomes large when (I_N)=(I_r)×50% is set.

Combinations of Internally Mounted Accessories (Optional)

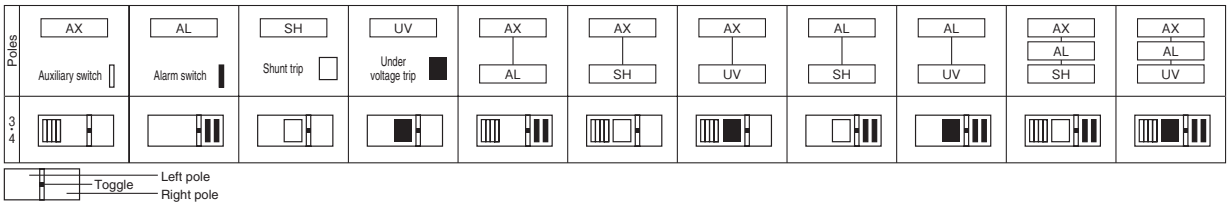

Outline dimensions (mm) S1600-NE

Front-connected

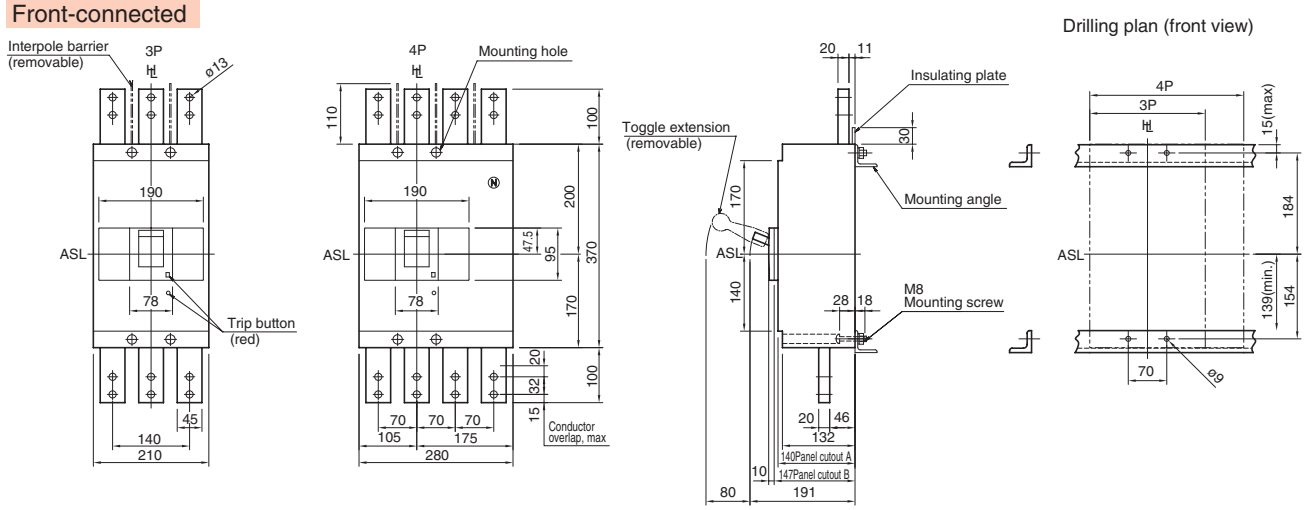

Rear-connected

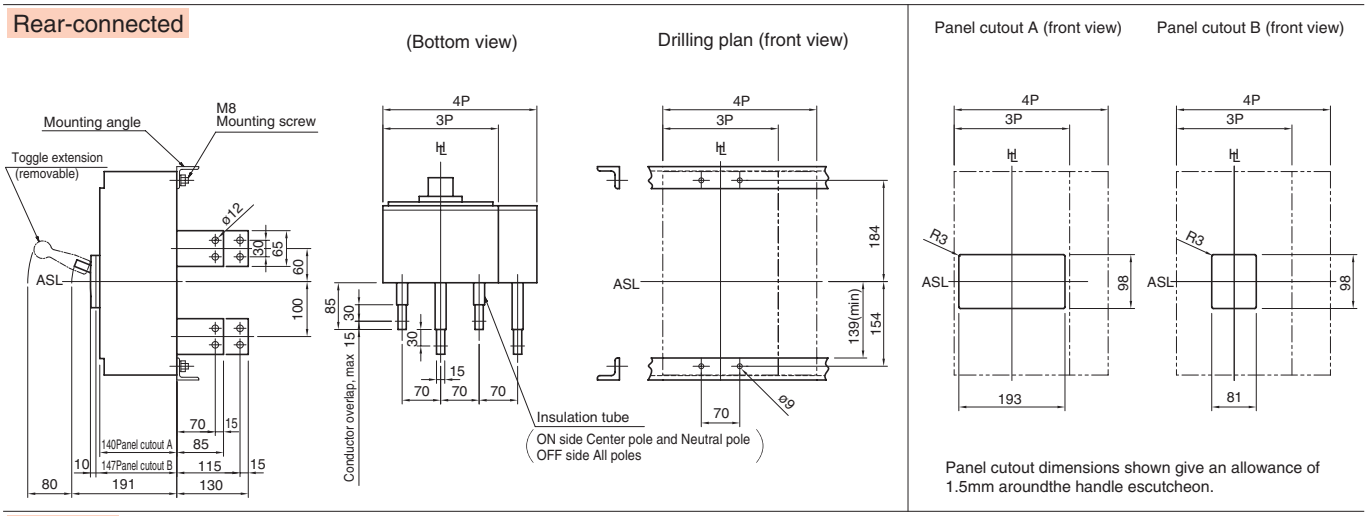

Panel cutout dimensions shown give an allowance of 1.5mm aroundthe handle escutcheon.

Draw-out

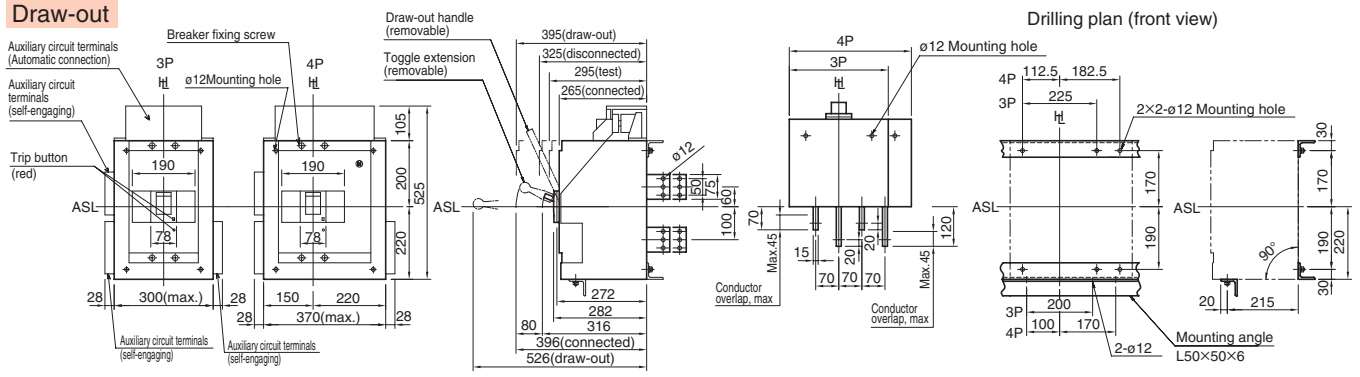

Flush-mounted

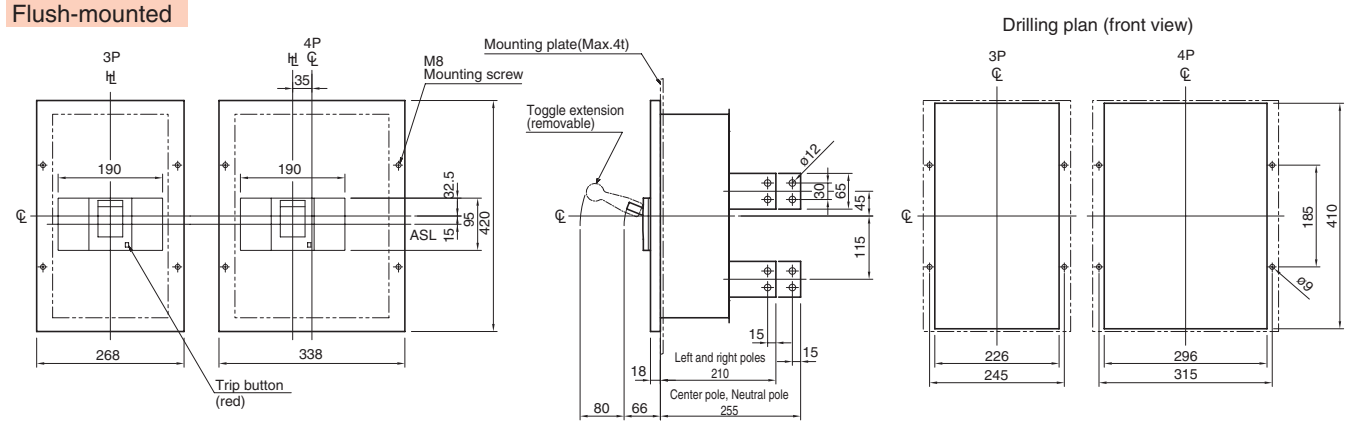

7 Characteristics and Outline Dimensions TemBreak PRO

Moulded Case Circuit Breakers

XS2000NE

Ratings and Specifications

Frame size (A)			2000	
Type			XS2000NE	
Number of poles			3	4
■ Ratings				
Rated current, A			Adjustable	
Calibrated at 40°C			I_{CT}=2000	
45°C			1000	1600
⑱			1200	1800
			1400	2000
Rated insulation voltage〔U_i〕 V			690	
Rated impulse withstand voltage〔U_{imp}〕 kV			8	
Rated short time withstand current 〔I_{cw}〕 kA			42(0.3sec.)	
Utilization Category			B	
■ Rated breaking capacity, kA				
JIS C 8201-2-1 Ann.1 Ann.2	AC	690V	45/42	
IEC 60947-2		500V	65/50	
I_{cu}/I_{cs}(sym)		440V	85/65	
		415V	85/65	
		380V	100/75	
		240V	125/94	
	DC	250V	—	
		125V	—	
NK	AC	690V	—	
I_{cu}/I_{cs}(sym)		450V	85/— ㉑	
		240V	—	
	DC	250V	—	
Weight (◉ marked standard type) kg			54.0	67.0
■ Connections and Mountings				
Front-connected (FC)	Terminal screws		—	
	With extension bars		○	
Rear-connected (RC)	Flat bar studs		◉	
Plug-in (PM) For switchboards	High-performance (PMB)		—	
	Standard (PMC)		—	
For distribution boards (PMD)			—	
Flush-mounted (FP)	With flat bar studs		○	
Draw-out type (DR)			○	
TemPlug70 (PG)			—	
DIN rail mount			—	
■ Accessories (optional)		Symbol		
Externally mounted: Toggle extension		H A	● ②	
Mechanical interlock ⑨	Rear-connected type	M B	●	
	Link type	M L	—	
	Wire type	M W	—	
Terminal cover	For front-connected	C F	—	
	For rear-connected and plug-in	C R	—	
Terminal block for lead		T F	●	
Door flange		D F	●	
CE marking			Yes	
Overcurrent trip mechanism			Electronic ⑯	
Colour of cover			Grey Blue	
Trip button (Colour)			Yes (Red)	
Suitability for isolation			Yes	
Reverse connection			Yes	

Notes:

◉ : Standard. This configuration used unless otherwise specified.
○ : Optional standard. Specify when ordering. ● : "yes" or "available". — : "no" or "not available"
② : Supplied as standard. ⑨ : Mechanical interlocks cannot be applied to draw-out type (DR).
⑯ : Optional preferential alarm or ground fault trip function available on request.
㉑ : This is the value for 500V AC. ⑥⑥ : Fixed depth, not adjustable.
⑱ : If the ambient temperature exceeds 45° C, reduce the operating current in accordance with 2 Environmental operating conditions of the chapter 8.

Time/Current characteristic curves

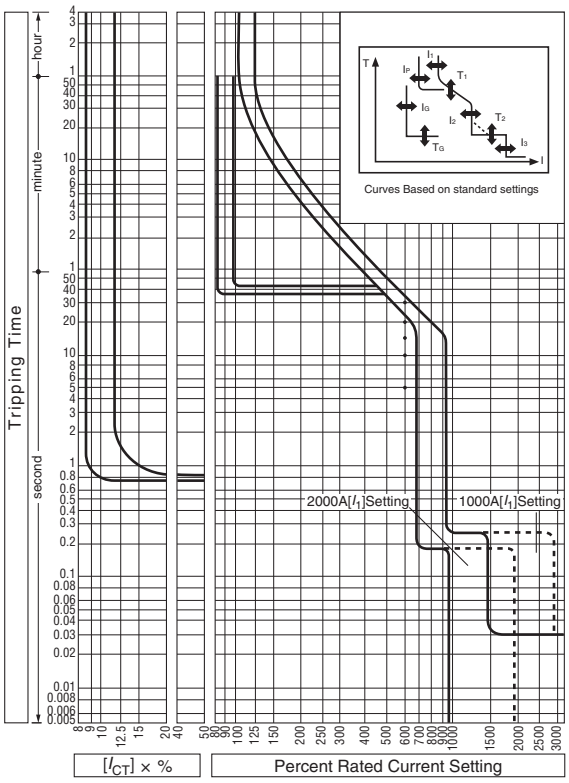

Overcurrent tripping characteristics

CT rated current(A) : (I_{CT})	2000
Rated current settings (A) : (I_1) (adjustable)	1000, 1200, 1400, 1600, 1800, 2000
Long time-delay time settings (S) : (T_1)	(5–10–15–20–30) at (I_1)×600% current adjustable Setting tolerance ±20%
Short time-delay pick-up current (A) : (I_2)	(I_1)×200, 400, 600, 800, 1000% adjustable Setting tolerance ±15%
Short time-delay time settings (S) : (T_2)	Opening time (0.1, 0.15, 0.2, 0.25, 0.3) in the definite time-delay. Total clearing time is +50ms and resettable time –20ms for the time-delay settings
Instantaneous trip pick-up current (A) : (I_3)	Continuously adjustable from (I_{CT})×300 to 1200% Setting tolerance ±20%
Preferential trip alarm pick-up current (A) : (I_p) (optional)	(I_1)×70, 80, 90, 100% adjustable Setting tolerance ±10%
Preferential trip alarm time setting (S) : (T_p) (optional)	40 fixed definite time-delay. Setting tolerance ±10%
Ground fault trip pick-up current (A) : (I_G) (optional) ⑥③	Continuously adjustable from (I_{CT})×10 to 40% Setting tolerance ±15%
Ground fault trip time settings (S) : (T_G) (optional) ⑥③	Opening time (0.1, 0.2, 0.3, 0.4, 0.8) in the definite time- delay. Total clearing time is +50ms and resettable time –20ms for the time-delay settings
Trip indicators (optional)	See page 6-12

Remark: If not otherwise specified, the product will be delivered with the underlined standard setting values.
Note ⑥③: Cannot be used with the preferential trip alarm.

Combinations of Internally Mounted Accessories (Optional)

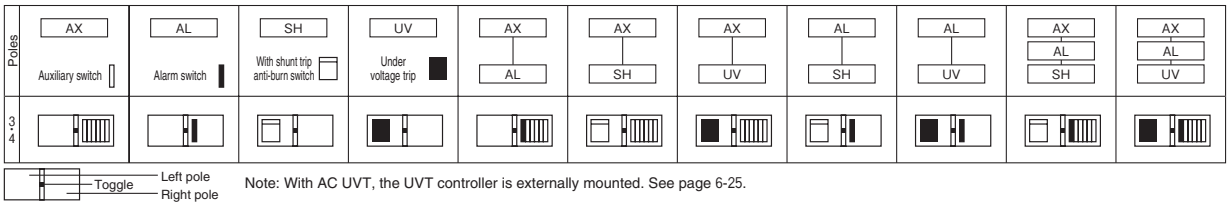

Note: With AC UVT, the UVT controller is externally mounted. See page 6-25.

Outline dimensions (mm) XS2000NE

Front-connected

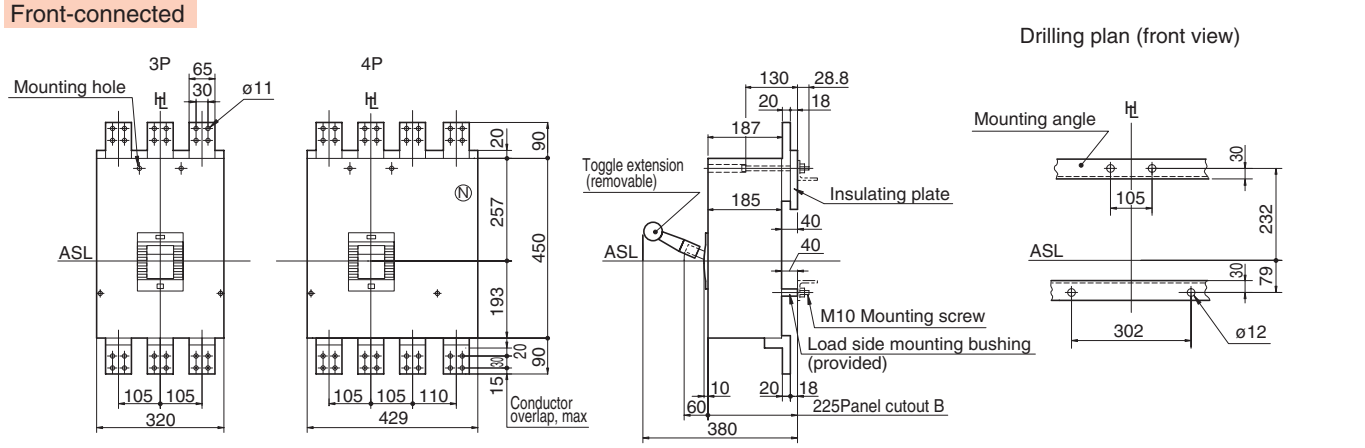

Rear-connected

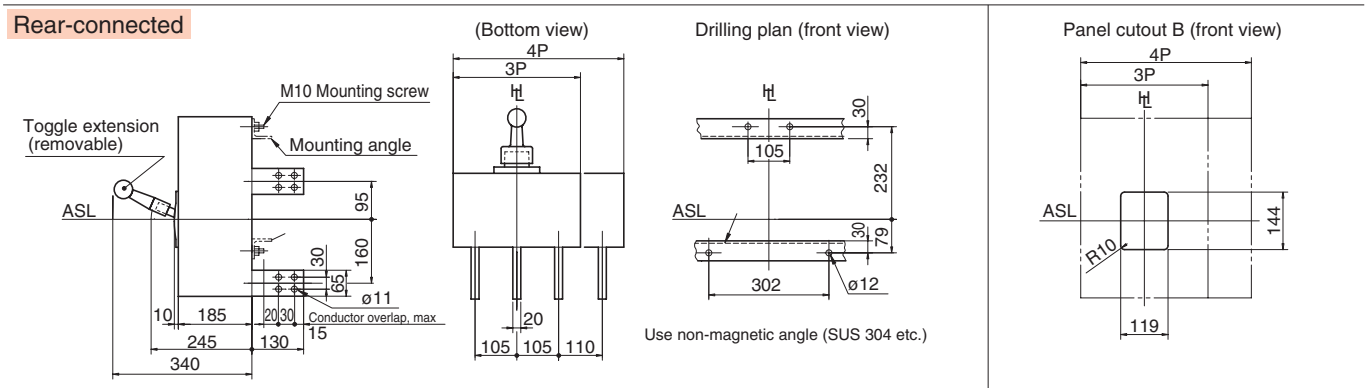

Use non-magnetic angle (SUS 304 etc.)

Use non-magnetic angle (SUS 304 etc.)

Panel cutout dimensions shown give an allowance of 2mm aroundthe handle escutcheon.

Draw-out

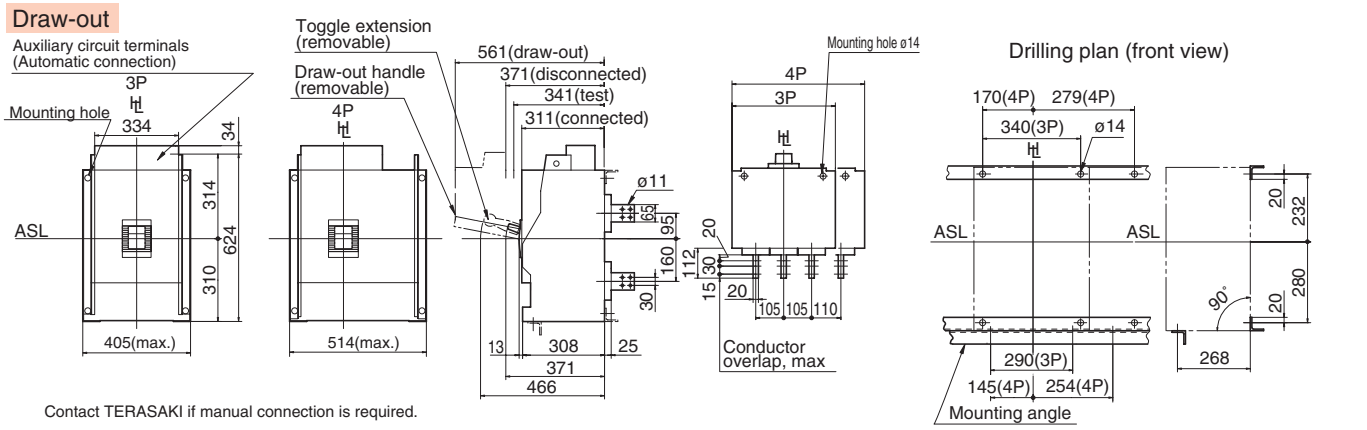

Contact TERASAKI if manual connection is required.

Flush-mounted

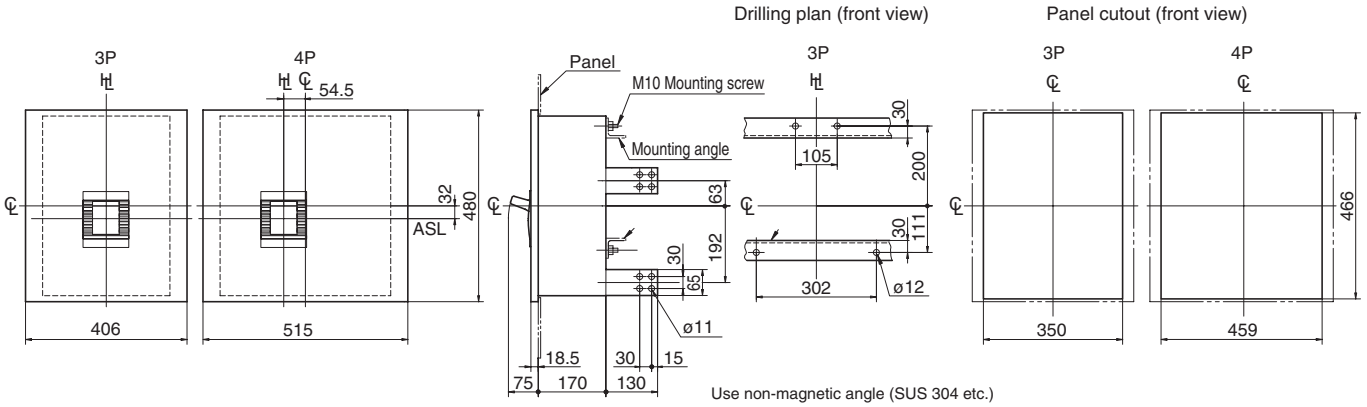

Use non-magnetic angle (SUS 304 etc.)

7 Characteristics and Outline Dimensions

TemBreak PRO

Moulded Case Circuit Breakers

XS2500NE

Ratings and Specifications

Frame size (A)			2500	
Type			**XS2500NE**	
Number of poles			3	4
■ Ratings				
Rated current, A			Adjustable	
Calibrated at 40°C			I_{CT}=2500	
45°C			1200 2000	
⑱			1400 2500	
			1600	
			(40°C only)	
Rated insulation voltage〔U_i〕 V			690	
Rated impulse withstand voltage〔U_{imp}〕 kV			8	
Rated short time withstand current 〔I_{cw}〕 kA			42(0.3sec.)	
Utilization Category			B	
■ Rated breaking capacity, kA				
JIS C 8201-2-1 Ann.1 Ann.2	AC	690V	45/42	
IEC 60947-2		500V	65/50	
I_{cu}/I_{cs}(sym)		440V	85/65	
		415V	85/65	
		380V	100/75	
		240V	125/94	
	DC	250V	—	
		125V	—	
NK	AC	690V	—	
I_{cu}/I_{cs}(sym)		450V	—	
		240V	—	
	DC	250V	—	
Weight (◉ marked standard type) kg			64	78.2
■ Connections and Mountings				
Front-connected (FC)	Terminal screws		—	
	With extension bars		—	
Rear-connected (RC)	Flat bar studs		◉	
Plug-in (PM) For switchboards	High-performance (PMB)		—	
	Standard (PMC)		—	
For distribution boards (PMD)			—	
Flush-mounted (FP)	With flat bar studs		○	
Draw-out type (DR)			—	
TemPlug70 (PG)			—	
DIN rail mount			—	
■ Accessories (optional)		Symbol		
Externally mounted: Toggle extension		H A	● ②	
Mechanical interlock: Rear-connected type		M B	●	
Mechanical interlock: Link type		M L	—	
Mechanical interlock: Wire type		M W	—	
Terminal cover: For front-connected		C F	—	
Terminal cover: For rear-connected and plug-in		C R	—	
Terminal block for lead		T F	●	
Door flange		D F	●	
CE marking			Yes	
Overcurrent trip mechanism			Electronic ⑯	
Colour of cover			Grey Blue	
Trip button (Colour)			Yes (Red)	
Suitability for isolation			Yes	
Reverse connection			Yes	

Notes:

◉ : Standard. This configuration used unless otherwise specified.
○ : Optional standard. Specify when ordering. ● : "yes" or "available". — : "no" or "not available"
② : Supplied as standard.
⑯ : Optional preferential alarm or ground fault trip function available on request.
⑥⑥ : Fixed depth, not adjustable.
⑱ : If the ambient temperature exceeds 45° C, reduce the operating current in accordance with 2 Environmental operating conditions of the chapter 8.

Time/Current characteristic curves

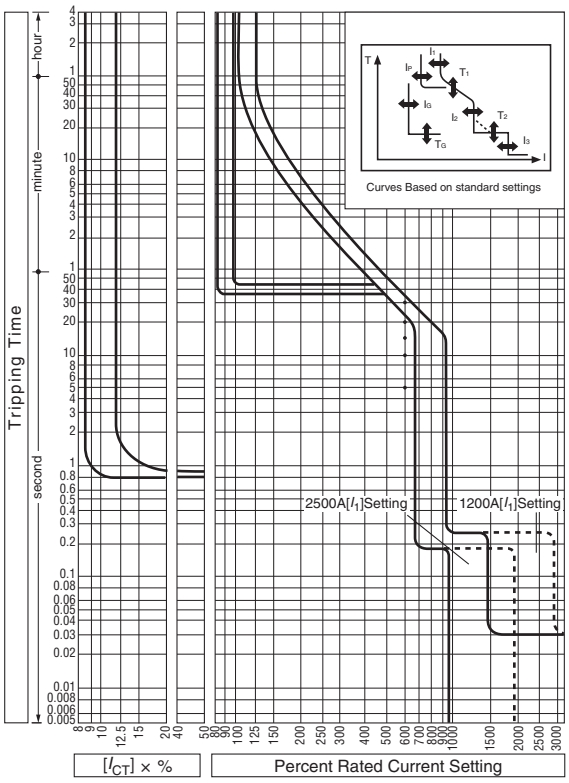

Overcurrent tripping characteristics

CT rated current(A) : (I_{CT})	2500
Rated current settings (A) : (I_1) (adjustable)	1200, 1400, 1600, 2000, 2500
Long time-delay time settings (S) : (T_1)	(5–10–15–20–30) at (I_1)×600% current adjustable Setting tolerance ±20%
Short time-delay pick-up current (A) : (I_2)	(I_1)×200, 400, 600, 800, 1000% adjustable Setting tolerance ±15%
Short time-delay time settings (S) : (T_2)	Opening time (0.1, 0.15, 0.2, 0.25, 0.3) in the definite time-delay. Total clearing time is +50ms and resettable time –20ms for the time-delay settings
Instantaneous trip pick-up current (A) : (I_3)	Continuously adjustable from (I_{CT})×300 to 1200% Setting tolerance ±20%
Preferential trip alarm pick-up current (A) : (I_p) (optional)	(I_1)×70, 80, 90, 100% adjustable Setting tolerance ±10%
Preferential trip alarm time setting (S) : (T_p) (optional)	40 fixed definite time-delay. Setting tolerance ±10%
Ground fault trip pick-up current (A) : (I_G) (optional) ⑥③	Continuously adjustable from (I_{CT})×10 to 40% Setting tolerance ±15%
Ground fault trip time settings (S) : (T_G) (optional) ⑥③	Opening time (0.1, 0.2, 0.3, 0.4, 0.8) in the definite time- delay. Total clearing time is +50ms and resettable time –20ms for the time-delay settings
Trip indicators (optional)	See page 6-12

Remark: If not otherwise specified, the product will be delivered with the underlined standard setting values.
Note ⑥③: Cannot be used with the preferential trip alarm.

Combinations of Internally Mounted Accessories (Optional)

Poles	AX	AL	SH	UV	AX + AL	AX + SH	AX + UV	AL + SH	AL + UV	AX + AL + SH	AX + AL + UV
	Auxiliary switch	Alarm switch	With shunt trip anti-burn switch	Under voltage trip							
3·4											

Toggle — Left pole / Right pole

Note: With AC UVT, the UVT controller is externally mounted. See page 6-25.

Outline dimensions (mm) XS2500NE

Rear-connected

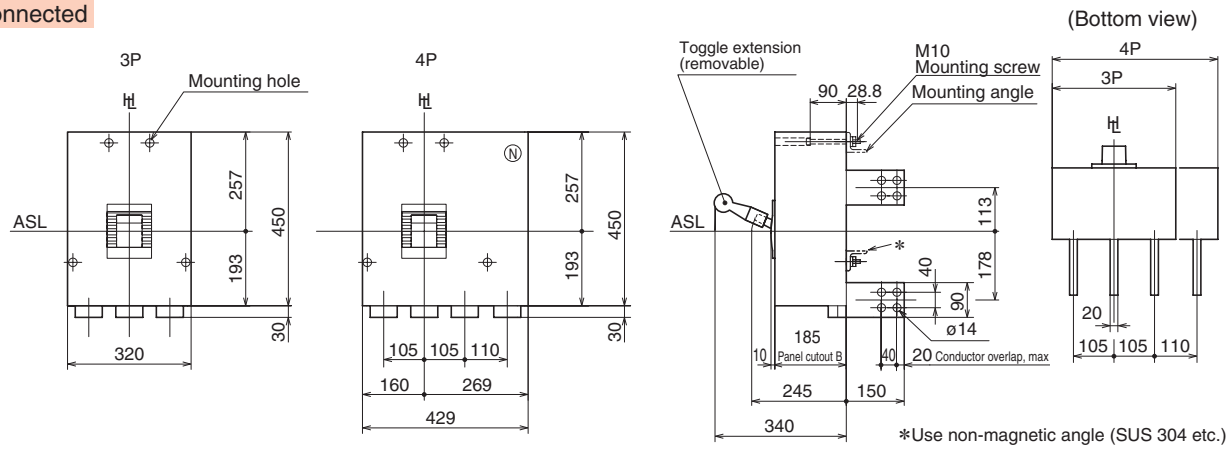

Panel cutout B (front view)

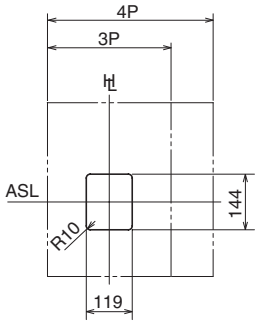

Drilling plan (front view)

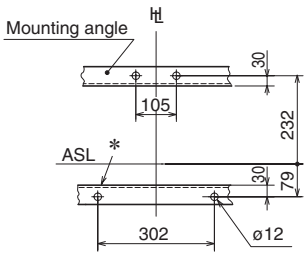

*Use non-magnetic angle (SUS 304 etc.)

Panel cutout dimensions shown give an allowance of 2mm around the handle escutcheon.

Flush-mounted

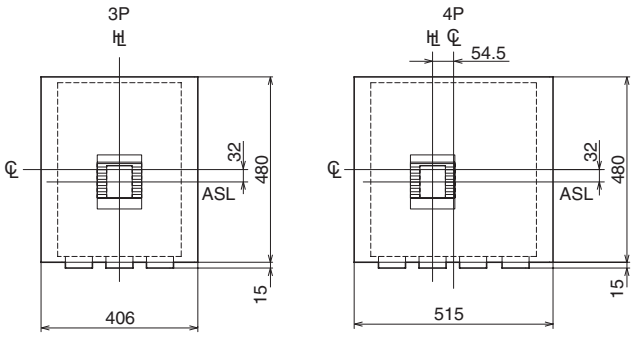

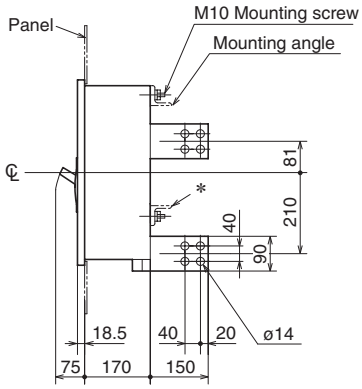

Panel cutout (front view)

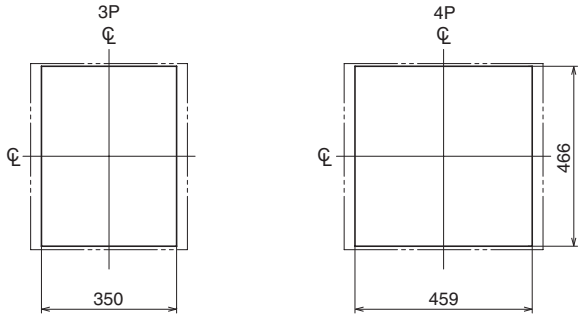

Drilling plan (front view)

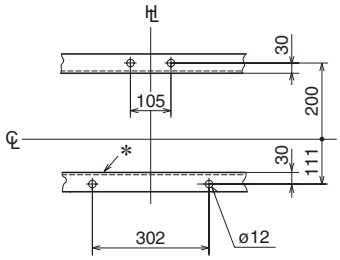

*Use non-magnetic angle (SUS 304 etc.)

7 Characteristics and Outline Dimensions

TemBreak PRO

Moulded Case Circuit Breakers

XS3200NE

Ratings and Specifications

Frame size (A)		3200	
Type		**XS3200NE**	
Number of poles		3	
■ Ratings			
Rated current, A		Adjustable	
Calibrated at 40°C		I_{CT}=3200	
45°C		1600 2800	
⑱		2000 3200	
		2500	
		(40℃ only)	
		⑪	
Rated insulation voltage〔U_i〕 V		690	
Rated impulse withstand voltage〔U_{imp}〕 kV		8	
Rated short time withstand current 〔I_{cw}〕 kA		38(0.5sec.)	
Utilization Category		B	
■ Rated breaking capacity, kA			
JIS C 8201-2-1 Ann.1 Ann.2	AC 690V	45/42	
IEC 60947-2	500V	65/50	
I_{cu}/I_{cs}(sym)	440V	85/65	
	415V	85/65	
	380V	100/75	
	240V	125/94	
	DC 250V	—	
	125V	—	
NK	AC 690V	—	
I_{cu}/I_{cs}(sym)	450V	—	
	240V	—	
	DC 250V	—	
Weight (◉ marked standard type) kg		65	
■ Connections and Mountings			
Front-connected (FC)	Terminal screws	—	
	With extension bars	—	
Rear-connected (RC)	Flat bar studs	◉	
Plug-in (PM) For switchboards	High-performance (PMB)	—	
	Standard (PMC)	—	
For distribution boards (PMD)		—	
Flush-mounted (FP)	With flat bar studs	○	
Draw-out type (DR)		—	
TemPlug70 (PG)		—	
DIN rail mount		—	
■ Accessories (optional)	**Symbol**		
Externally mounted: Toggle extension	H A	● ②	
Mechanical interlock: Rear-connected type	M B	●	
Mechanical interlock: Link type	M L	—	
Mechanical interlock: Wire type	M W	—	
Terminal cover: For front-connected	C F	—	
Terminal cover: For rear-connected and plug-in	C R	—	
Terminal block for lead	T F	●	
Door flange	D F	●	
CE marking		Yes	
Overcurrent trip mechanism		Electronic ⑯	
Colour of cover		Grey Blue	
Trip button (Colour)		Yes (Red)	
Suitability for isolation		Yes	
Reverse connection		Yes	

Notes:

◉ : Standard. This configuration used unless otherwise specified.
○ : Optional standard. Specify when ordering. ● : "yes" or "available". — : "no" or "not available"
② : Supplied as standard.
⑯ : Optional preferential alarm or ground fault trip function available on request.
⑥⑥ : Fixed depth, not adjustable. ⑪ : 3000A is also available as special.
⑱ : If the ambient temperature exceeds 45° C, reduce the operating current in accordance with 2 Environmental operating conditions of the chapter 8.

Time/Current characteristic curves

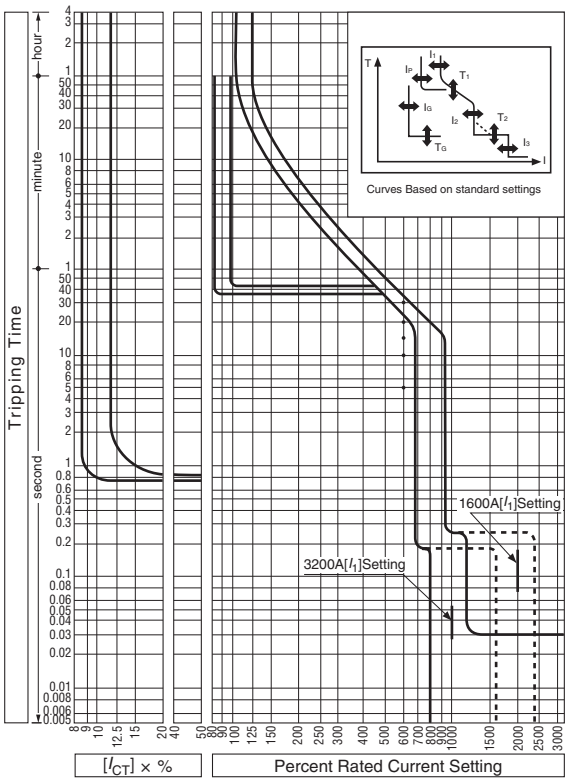

Overcurrent tripping characteristics

CT rated current(A) : (I_{CT})	3200
Rated current settings (A) : (I_1) (adjustable)	1600, 2000, 2500, 2800, 3200
Long time-delay time settings (S) : (T_1)	(5–10–15–20–30) at (I_1)×600% current adjustable Setting tolerance ±20%
Short time-delay pick-up current (A) : (I_2)	(I_1)×200, 400, 600, 800, 1000% adjustable Setting tolerance ±15%
Short time-delay time settings (S) : (T_2)	Opening time (0.1, 0.15, 0.2, 0.25, 0.3) in the definite time-delay. Total clearing time is +50ms and resettable time –20ms for the time-delay settings
Instantaneous trip pick-up current (A) : (I_3)	Continuously adjustable from (I_{CT})×300 to 1000% Setting tolerance ±20%
Preferential trip alarm pick-up current (A) : (I_p) (optional)	(I_1)×70, 80, 90, 100% adjustable Setting tolerance ±10%
Preferential trip alarm time setting (S) : (T_p) (optional)	40 fixed definite time-delay. Setting tolerance ±10%
Ground fault trip pick-up current (A) : (I_G) (optional) ⑥③	Continuously adjustable from (I_{CT})×10 to 40% Setting tolerance ±15%
Ground fault trip time settings (S) : (T_G) (optional) ⑥③	Opening time (0.1, 0.2, 0.3, 0.4, 0.8) in the definite time- delay. Total clearing time is +50ms and resettable time –20ms for the time-delay settings
Trip indicators (optional)	See page 6-12

Remark: If not otherwise specified, the product will be delivered with the underlined standard setting values.
Note ⑥③: Cannot be used with the preferential trip alarm.

Combinations of Internally Mounted Accessories (Optional)

Poles	AX	AL	SH	UV	AX / AL	AX / SH	AX / UV	AL / SH	AL / UV	AX / AL / SH	AX / AL / UV
	Auxiliary switch	Alarm switch	With shunt trip anti-burn switch	Under voltage trip							
3											

Toggle — Left pole / Right pole

Note: With AC UVT, the UVT controller is externally mounted. See page 6-25.

Outline dimensions (mm) XS3200NE

Rear-connected

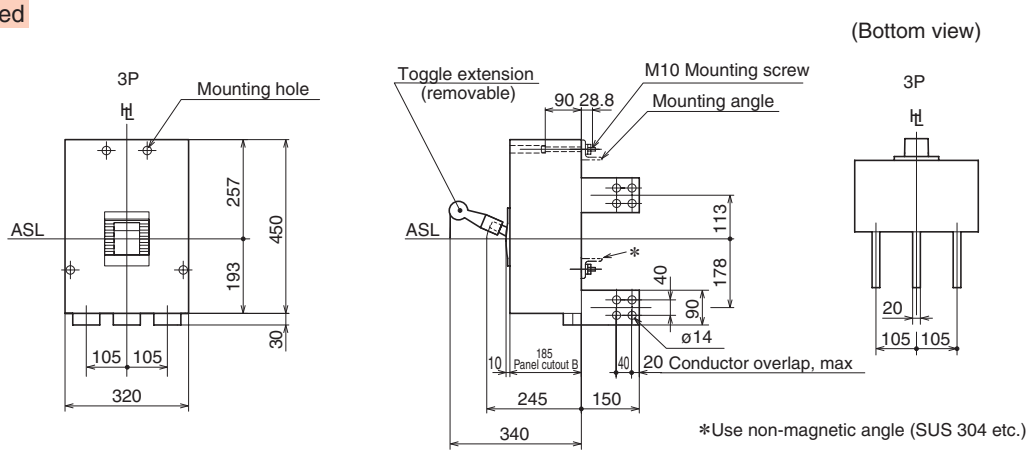

*Use non-magnetic angle (SUS 304 etc.)

Panel cutout B (front view)

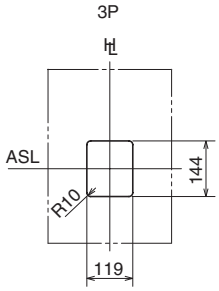

Drilling plan (front view)

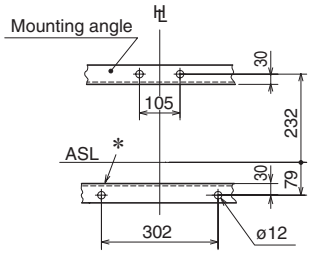

*Use non-magnetic angle (SUS 304 etc.)

Panel cutout dimensions shown give an allowance of 2mm around the handle escutcheon.

Flush-mounted

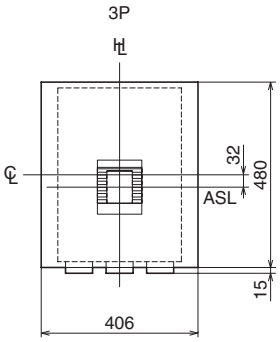

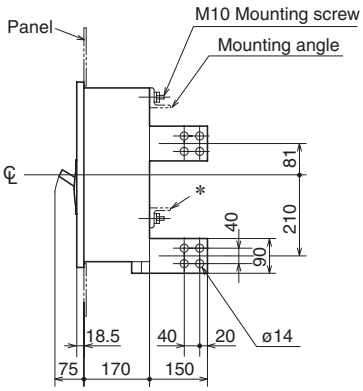

Panel cutout (front view)

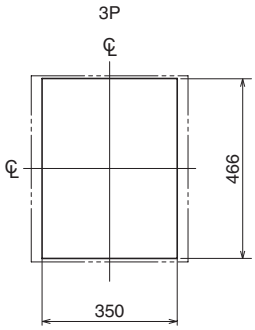

Drilling plan (front view)

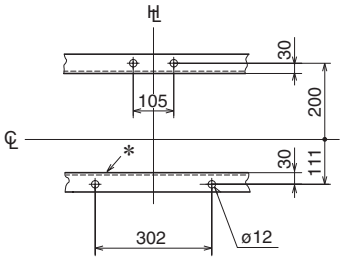

*Use non-magnetic angle (SUS 304 etc.)

7 Characteristics and Outline Dimensions TemBreak2

Moulded Case Circuit Breakers for motor protection

E30-NM, E50-NM, S30-NM, S50-NM

Ratings and Specifications

Frame size (A)	30	50	30	50
Type	E30-NM	E50-NM	S30-NM	S50-NM
Number of poles	3	3	3	3
■ Ratings				
Motor rated capacity (kW) and breaker rated current (A)				
Calibrated at 40°C	(A) / (kW) 200/220V / 400/440V	(A) / (kW) 200/220V / 400/440V	(A) / (kW) 200/220V / 400/440V	(A) / (kW) 200/220V / 400/440V
	1.4 / 0.2 / 0.4	24 / 5.5 / 11	0.7 / — / 0.2	10 / 2.2 / —
	2.6 / 0.4 / —	32 / 7.5 / 15	1.4 / 0.2 / 0.4	12 / — / 5.5
	4 / 0.75 / 1.5	40 / — / 18.5	2 / — / 0.75	16 / 3.7 / 7.5
	8 / 1.5 / 3.7	45 / 11 / 22	2.6 / 0.4 / —	24 / 5.5 / 11
	10 / 2.2 / —	(40℃ only)	4 / 0.75 / 1.5	32 / 7.5 / 15
	16 / 3.7 / 7.5		5 / — / 2.2	40 / — / 18.5
	24 / 5.5 / 11		8 / 1.5 / 3.7	45 / 11 / 22
	32 / 7.5 / 15		10 / 2.2 / —	(40℃ only)
	(40℃ only)		12 / — / 5.5	
			16 / 3.7 / 7.5	
			24 / 5.5 / 11	
			32 / 7.5 / 15	
			(40℃ only)	
45°C				

Note: Select an appropriate one depending on the total load current of the motor operator.

Rated insulation voltage〔U_i〕 V			500	690	690	690
Rated impulse withstand voltage〔U_{imp}〕 kV			6	6	6	6
■ Rated breaking capacity, kA						
JIS C 8201-2-1 Ann.1 Ann.2	AC	440V	1.5/1	2.5/2	2.5/2	10/5
IEC 60947-2		415V	1.5/1	2.5/2	2.5/2	10/5
I_{cu}/I_{cs}(sym)		380V	1.5/1	2.5/2	2.5/2	10/5
		240V	2.5/2 ⑥⑨	5/3 ⑥⑨	5/3 ⑥⑨	25/13 ⑥⑨
Weight (◉ marked standard type) kg			0.5	0.5	0.5	0.5
■ Connections and Mountings						
Front-connected (FC)	Terminal screws		◉ ㊺	◉ ㊺	◉ ㊺	◉ ㊺
	With extension bars		○ ㊸	○ ㊸	○ ㊸	○ ㊸
Rear-connected (RC)	Flat bar studs		○	○	○	○
Plug-in (PM) For switchboards	High-performance (PMB)		—	—	—	—
	Standard (PMC)		—	—	—	—
For distribution boards (PMD)			—	—	—	—
Flush-mounted (FP)	With flat bar studs		○	○	○	○
Draw-out type (DR)			—	—	—	—
TemPlug70 (PG)			—	—	—	—
DIN rail mount			◉	◉	◉	◉
■ Accessories (optional)		Symbol				
Externally mounted: Motor operator		M C	—	—	—	—
External operating handle	Breaker-mounted	H B	△	△	△	△
	Door-mounted (variable depth)	H P	△	△	△	△
Toggle extension		H A	—	—	—	—
Mechanical interlock	Slide type	M S	●	●	●	●
	Rear-connected type	M B	—	—	—	—
	Link type	M L	—	—	—	—
	Wire type	M W	—	—	—	—
Toggle holder		H H	—	—	—	—
Toggle lock		H L	●	●	●	●
Terminal cover	For front-connected	C F	●	●	●	●
	For rear-connected and plug-in	C R	● ②	● ②	● ②	● ②
Terminal block for lead		T F	●	●	●	●
Door flange		D F	—	—	—	—
CE marking			Yes	Yes	Yes	Yes
Overcurrent trip mechanism			Hydraulic-magnetic type	Hydraulic-magnetic type	Hydraulic-magnetic type	Hydraulic-magnetic type
Colour of cover			Light Grey	Light Grey	Light Grey	Light Grey
Trip button (Colour)			Yes (Red)	Yes (Red)	Yes (Red)	Yes (Red)
Suitability for isolation			Yes	Yes	Yes	Yes
Reverse connection			Yes ⑫	Yes	Yes	Yes ⑫

Notes:

◉ : Standard. This configuration used unless otherwise specified. ○ : Optional standard. Specify when ordering.
● : "yes" or "available". — : "no" or "not available". △ : Custom-built product. Please contact us for details.
② : Supplied as standard.
㊺ : A wire clamping terminal is provided.
㊸ : For the extension bars, please place the order separately in parts.
⑥⑨ : This is the value for 230V AC.
⑫ : There are some limitations. See page 5-23 for details.

Time/Current characteristic curves

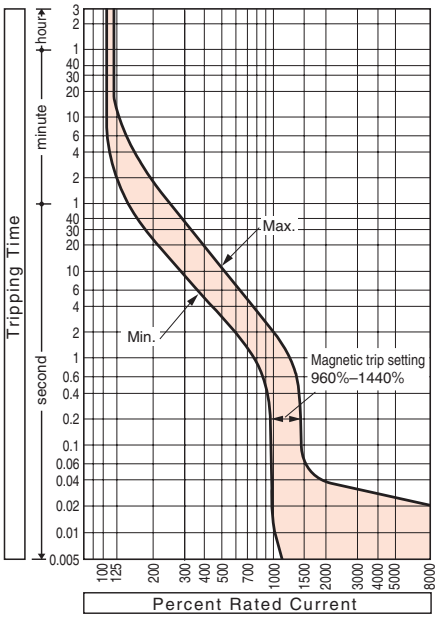

Ambient compensating curves

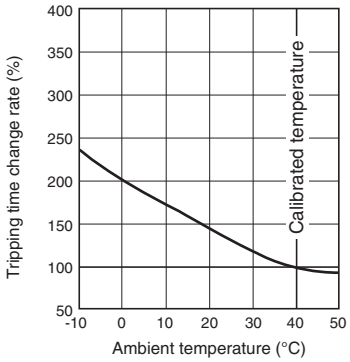

Combinations of Internally Mounted Accessories (Optional)

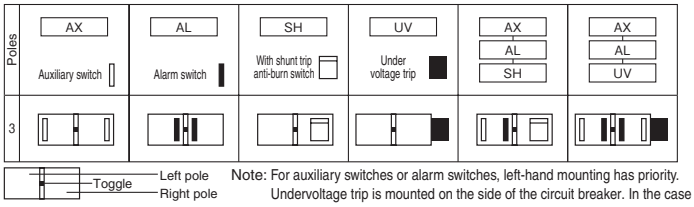

Note: For auxiliary switches or alarm switches, left-hand mounting has priority.
Undervoltage trip is mounted on the side of the circuit breaker. In the case of flush mounted type (FP), it cannot be installed.

Outline dimensions (mm) — E30-NM, E50-NM, S30-NM, S50-NM

Front-connected

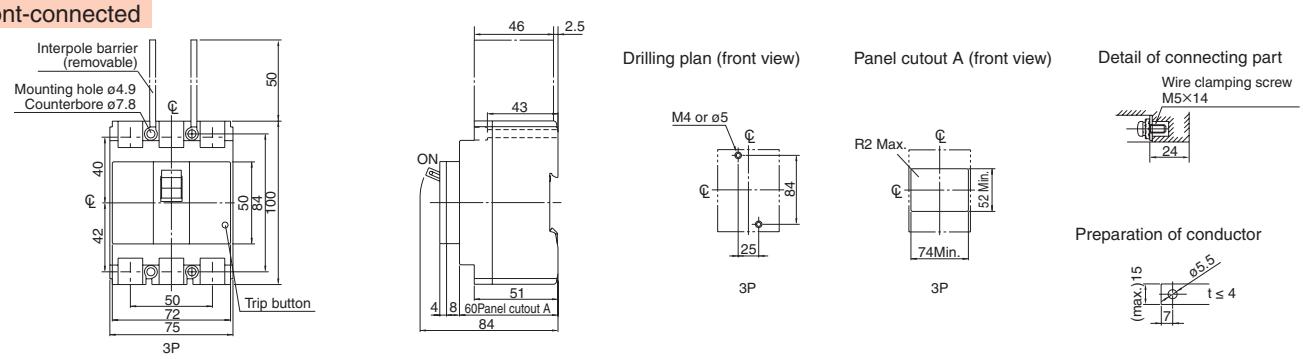

Rear-connected

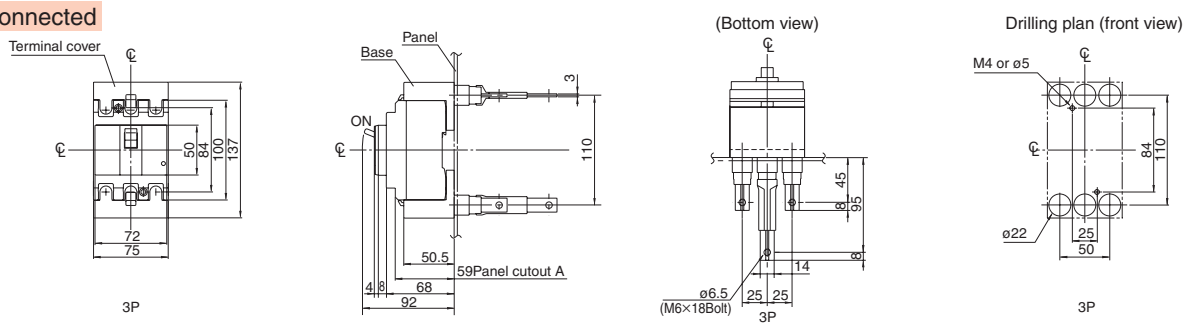

Note: The mounting direction of the studs cannot be changed. Please specify the mounting direction when ordering. The line side and load side will be factory installed in the horizontal direction unless otherwise specified.

Flush-mounted

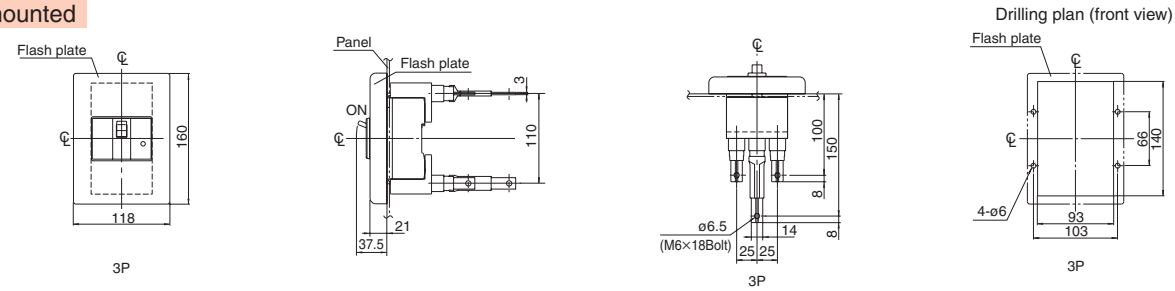

Note: The mounting direction of the studs cannot be changed. Please specify the mounting direction when ordering. The line side and load side will be factory installed in the horizontal direction unless otherwise specified.

7 Characteristics and Outline Dimensions TemBreak2

Moulded Case Circuit Breakers for motor protection

E100-NM

Ratings and Specifications

Frame size (A)		100			
Type		**E100-NM**			
Number of poles		3			
■ Ratings					
Motor rated capacity (kW) and breaker rated current (A)					
Calibrated at 40°C					
45°C					

(A)	(kW) 200/220V	(kW) 400/440V
60	15	30
75	18.5	37
90	22	45

(40°C only)

Note: Select an appropriate one depending on the total load current of the motor operator.

Rated insulation voltage〔U_i〕 V			690			
Rated impulse withstand voltage〔U_{imp}〕 kV			6			
■ Rated breaking capacity, kA						
JIS C 8201-2-1 Ann.1 Ann.2	AC	440V	10/5			
IEC 60947-2		415V	10/5			
I_{cu}/I_{cs}(sym)		380V	10/5			
		240V	25/13 ⑲			
Weight (◉ marked standard type) kg			0.5			
■ Connections and Mountings						
Front-connected (FC)	Terminal screws		◉			
	With extension bars		○ ⑬			
Rear-connected (RC)	Flat bar studs		○			
Plug-in (PM)	For switchboards	High-performance (PMB)	—			
		Standard (PMC)	—			
	For distribution boards (PMD)		—			
Flush-mounted (FP)	With flat bar studs		○			
Draw-out type (DR)			—			
TemPlug70 (PG)			—			
DIN rail mount			◉			
■ Accessories (optional)			**Symbol**			
Externally mounted: Motor operator			M C	—		
External operating handle	Breaker-mounted		H B	△		
	Door-mounted (variable depth)		H P	△		
Toggle extension			H A	—		
Mechanical interlock	Slide type		M S	●		
	Rear-connected type		M B	—		
	Link type		M L	—		
	Wire type		MW	—		
Toggle holder			H H	—		
Toggle lock			H L	●		
Terminal cover	For front-connected		C F	●		
	For rear-connected and plug-in		C R	● ②		
Terminal block for lead			T F	●		
Door flange			D F	—		
CE marking				Yes		
Overcurrent trip mechanism				Hydraulic-magnetic type		
Colour of cover				Light Grey		
Trip button (Colour)				Yes (Red)		
Suitability for isolation				Yes		
Reverse connection				Yes ⑫		

Notes:

◉ : Standard. This configuration used unless otherwise specified. ○ : Optional standard. Specify when ordering.
● : "yes" or "available". — : "no" or "not available". △ : Custom-built product. Please contact us for details.
② : Supplied as standard.
⑬ : For the extension bars, please place the order separately in parts.
⑲ : This is the value for 230V AC.
⑫ : There are some limitations. See page 5-23 for details.

Time/Current characteristic curves

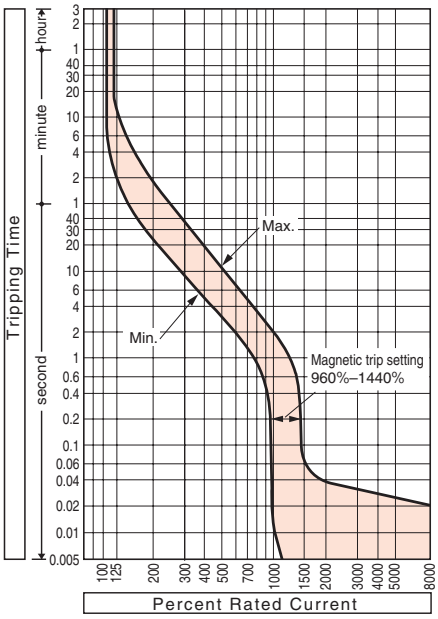

Ambient compensating curves

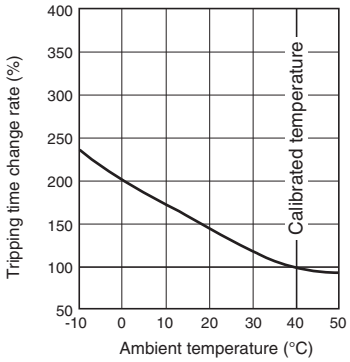

Combinations of Internally Mounted Accessories (Optional)

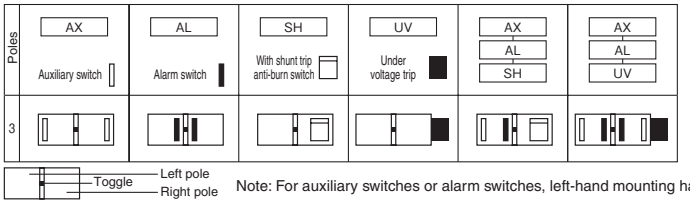

Note: For auxiliary switches or alarm switches, left-hand mounting has priority.

℄ : Handle Centre Line ⊢⊣ : Handle Frame Centre Line

Outline dimensions (mm) E100-NM

Front-connected

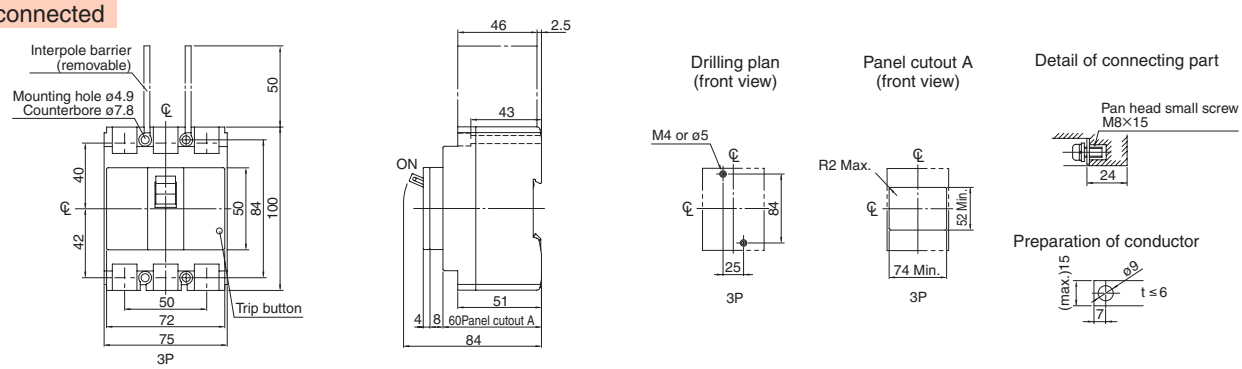

Rear-connected

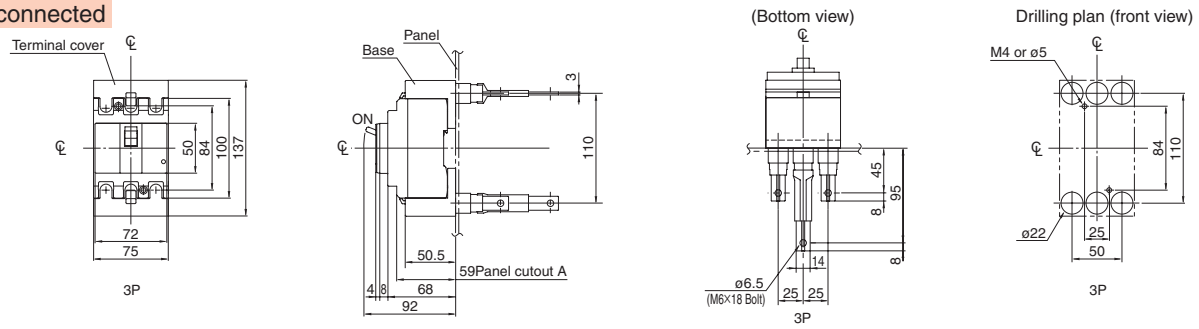

Note: The mounting direction of the studs cannot be changed. Please specify the mounting direction when ordering.
The line side and load side will be factory installed in the horizontal direction unless otherwise specified.

Flush-mounted

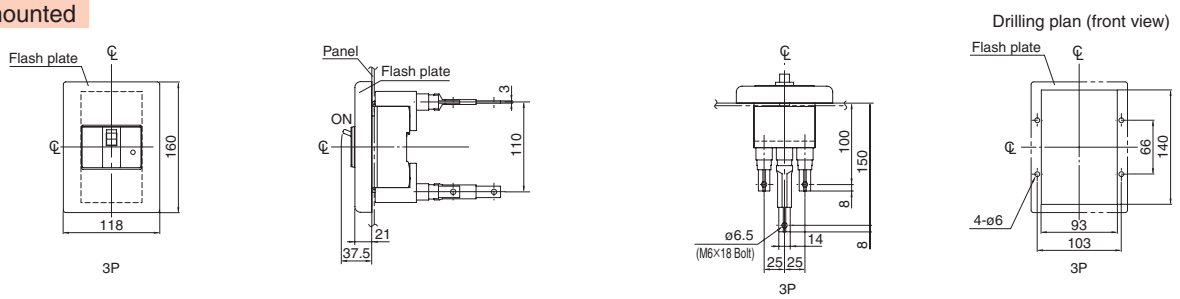

Note: The mounting direction of the studs cannot be changed. Please specify the mounting direction when ordering.
The line side and load side will be factory installed in the horizontal direction unless otherwise specified.

7 Characteristics and Outline Dimensions TemBreak PRO

Moulded Case Circuit Breakers for motor protection

S250-SM

Ratings and Specifications

Frame size (A)		225			
Type		**S250-SM**			
Number of poles		3			
■ Ratings					
Motor rated capacity (kW) and breaker rated current (A)					
Calibrated at 40°C					
45°C					

(A)	(kW) 200/220V	(kW) 400/440V
125	30	—
150	37	75
175	45	90
225	55	110

Note: Select an appropriate one depending on the total load current of the motor operator.

Rated insulation voltage〔U_i〕 V			690			
Rated impulse withstand voltage〔U_{imp}〕 kV			8			
■ Rated breaking capacity, kA						
JIS C 8201-2-1 Ann.1 Ann.2	AC	440V	30/15			
IEC 60947-2		415V	40/20			
I_{cu}/I_{cs}(sym)		380V	40/20			
		240V	85/43			
Weight (◉ marked standard type) kg			1.5			
■ Connections and Mountings						
Front-connected (FC)	Terminal screws		◉			
	With extension bars		○ ㊸			
Rear-connected (RC)	Flat bar studs		○			
Plug-in (PM) For switchboards	High-performance (PMB)		—			
	Standard (PMC)		—			
For distribution boards (PMD)			—			
Flush-mounted (FP)	With flat bar studs		○			
Draw-out type (DR)			—			
TemPlug70 (PG)			○			
DIN rail mount			—			
■ Accessories (optional)		**Symbol**				
Externally mounted: Motor operator		M C	●			
External operating handle	Breaker-mounted	H B	●			
	Door-mounted (variable depth)	H P	●			
Toggle extension		H A	—			
Mechanical interlock	Slide type	M S	●			
	Rear-connected type	M B	—			
	Link type	M L	●			
	Wire type	MW	●			
Toggle holder		H H	●			
Toggle lock		H L	●			
Terminal cover	For front-connected	C F	●			
	For rear-connected and plug-in	C R	●			
Terminal block for lead		T F	●			
Door flange		D F	●			
CE marking			Yes			
Overcurrent trip mechanism			Thermal-magnetic			
Colour of cover			Grey Blue			
Trip button (Colour)			Yes (Red)			
Suitability for isolation			Yes			
Reverse connection			Yes			

Notes:
◉ : Standard. This configuration used unless otherwise specified. ○ : Optional standard. Specify when ordering.
● : "yes" or "available". — : "no" or "not available". △ : Custom-built product. Please contact us for details.
㊸ : For the extension bars, please place the order separately in parts.

Time/Current characteristic curves

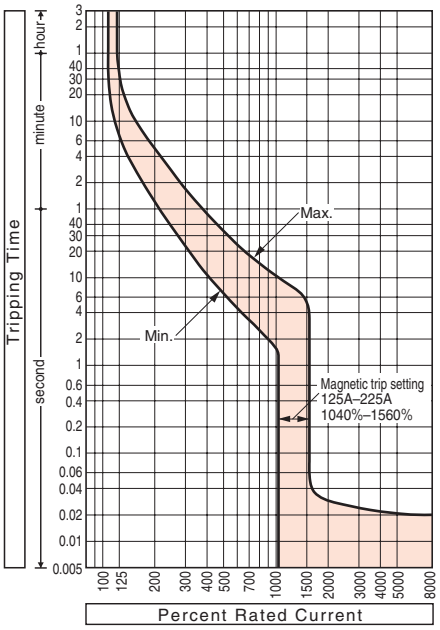

Ambient compensating curves

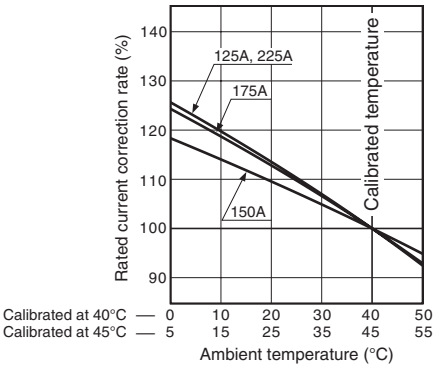

Combinations of Internally Mounted Accessories (Optional)

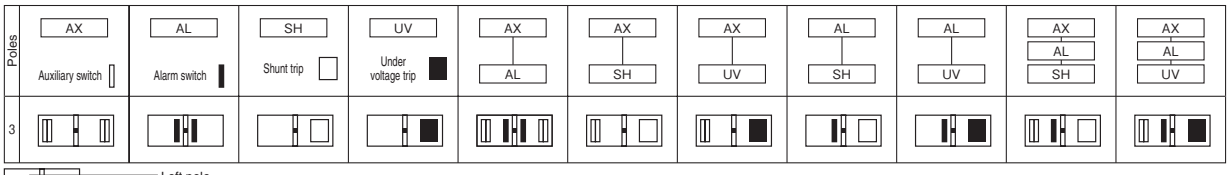

Note: For auxiliary switches or alarm switches, left-hand mounting has priority.

Outline dimensions (mm) S250-SM

Front-connected

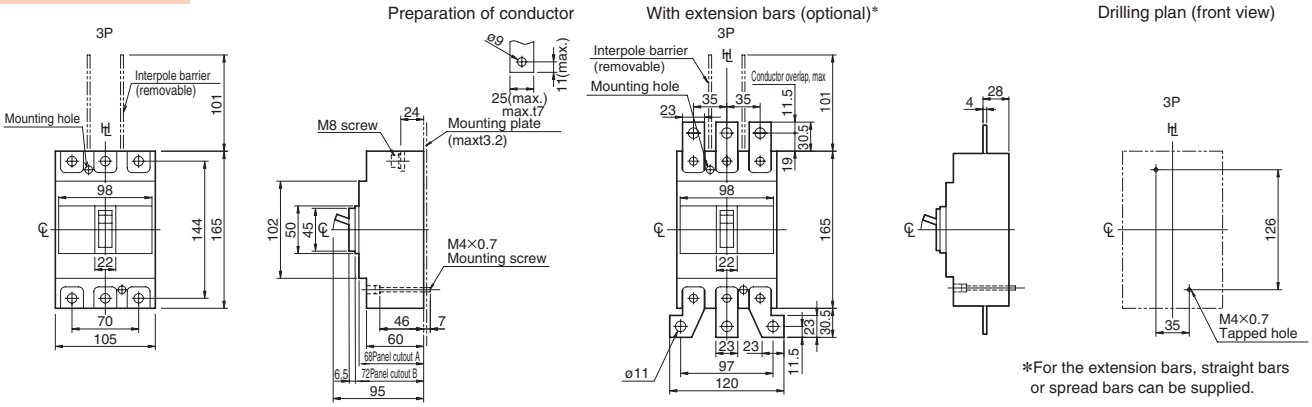

*For the extension bars, straight bars or spread bars can be supplied.

Rear-connected

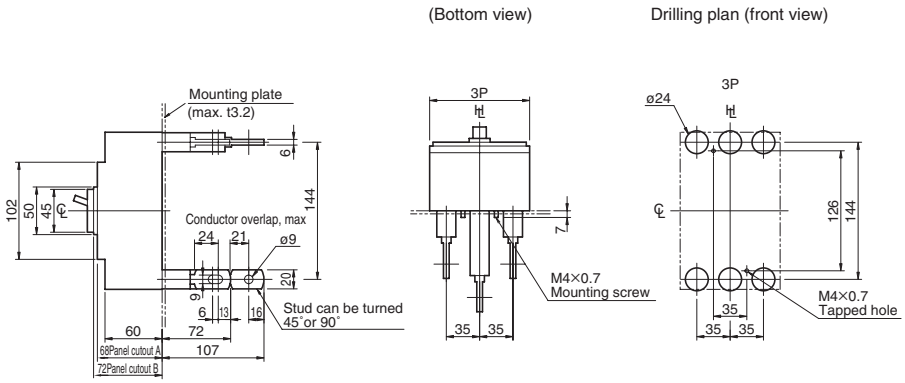

Note: Studs are factory installed in horizontal direction both on the line and load sides.

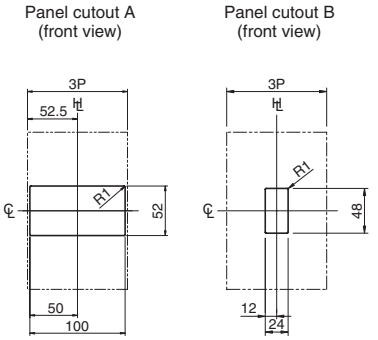

Panel cutout dimensions shown give an allowance of 1.0mm around the handle escutcheon.

Flush-mounted

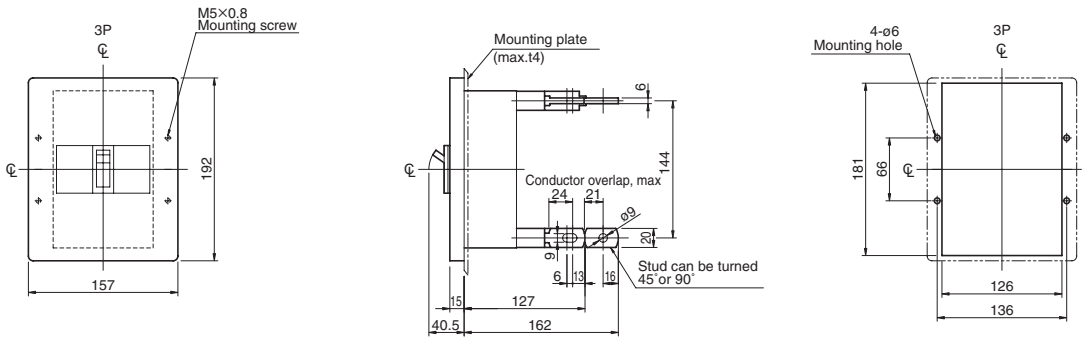

Switch-disconnectors

PE30-NN, PE50-NN

Ratings and Specifications

Frame size (A)			30		50			
Type			PE30-NN		PE50-NN			
Number of poles			2	3	2	3		
■ Ratings								
Rated current, A			30		50			
Rated insulation voltage〔U_i〕 V			690		690			
Rated operational voltage V		AC	415		500			
		DC	—		250 ㉗			
Rated impulse withstand voltage〔U_{imp}〕 kV			8		8			
Rated short circuit making capacity〔I_{cm}〕 kA peak			1.5		1.5			
Rated short time withstand current〔I_{cw}〕 kA			1 (1sec.)		1 (1sec.)			
■ Performance								
Utilization category		AC	AC-23A		AC-23A			
JIS C 8201-3 IEC 60947-3		DC	—		DC-22A			
Upstream breaker (OCPD) ㉙			PE30-NF		PE50-NF			
Weight (◉ marked standard type) kg			0.5	0.7	0.5	0.7		
■ Connections and Mountings								
Front-connected (FC)	Terminal screws		◉ ㊺		◉ ㊺			
	With extension bars		○ ㊸		○ ㊸			
Rear-connected (RC)	Flat bar studs		○		○			
Plug-in (PM) For switchboards	High-performance (PMB)		—		—			
	Standard (PMC)		—	○	—	○		
For distribution boards (PMD) ㊺			○		○			
Flush-mounted (FP)	With flat bar studs		○		○			
Draw-out type (DR)			—		—			
TemPlug70 (PG)			—		—			
DIN rail mount			—	○ ⑪	—	○ ⑪		
■ Accessories (optional)		Symbol						
Externally mounted: Motor operator		M C	—		—			
External operating handle	Breaker-mounted	H B	—	●	—	●		
	Door-mounted (variable depth)	H P	—	●	—	●		
Toggle extension		H A	—		—			
Mechanical interlock	Slide type	M S	—	●	—	●		
	Rear-connected type	M B	—		—			
	Link type	M L	—		—			
	Wire type	MW	—		—			
Toggle holder		H H	●		●			
Toggle lock		H L	●		●			
Terminal cover	For front-connected	C F	●		●			
	For rear-connected and plug-in	C R	●		●			
Terminal block for lead		T F	●		●			
Door flange		D F	●		●			
CE marking			Yes		Yes			
Colour of cover			Grey Blue		Grey Blue			
Trip button (Colour)			Yes (Red)		Yes (Red)			
Suitability for isolation			Yes		Yes			
Reverse connection			Yes		Yes			

Notes:

◉ : Standard. This configuration used unless otherwise specified. ○ : Optional standard. Specify when ordering.

● : "yes" or "available". — : "no" or "not available"

⑪ : Please order the DIN rail adapter separately. See page 6-152.

㉙ : Please use upstream breaker for overcurrent protection. Rated conditional short-circuit current [Icc] will be the same as Rated short-circuit breaking capacity of upstream breaker.

㊺ : A wire clamping terminal is provided.

㊸ : For the extension bars, please place the order separately in parts.

㊺ : See page 7-172 for the outline dimensions.

Combinations of Internally Mounted Accessories (Optional)

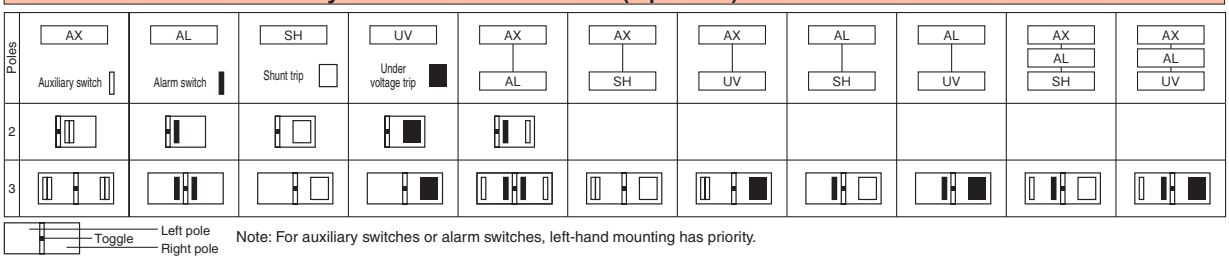

Note: For auxiliary switches or alarm switches, left-hand mounting has priority.

Outline dimensions (mm) PE30-NN, PE50-NN

Front-connected

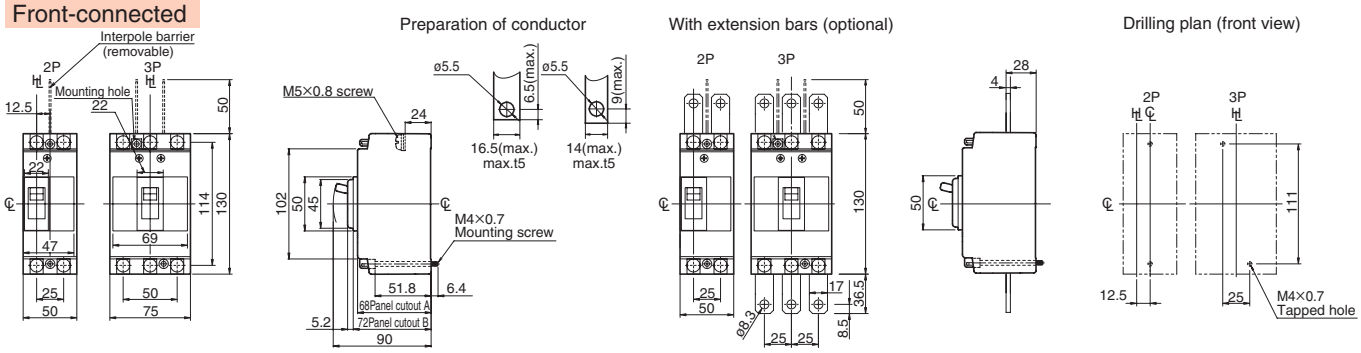

Rear-connected

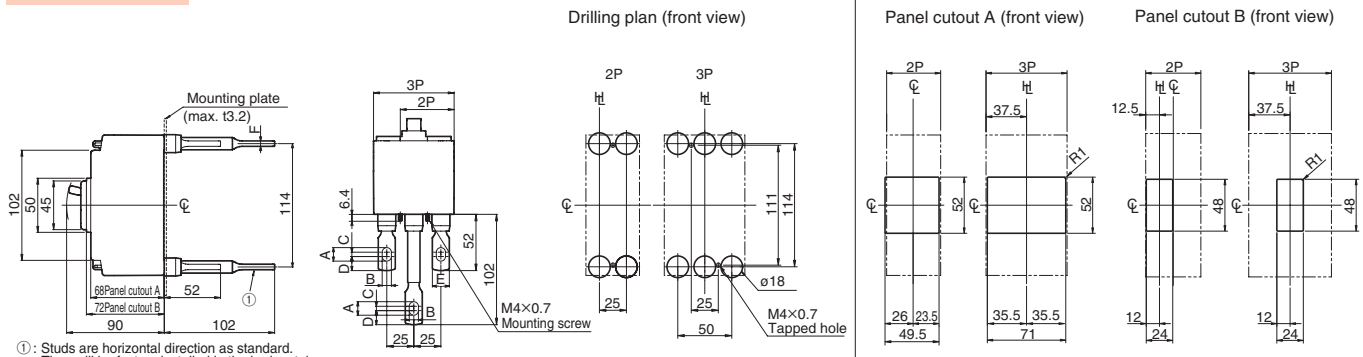

① : Studs are horizontal direction as standard. They will be factory installed in the horizontal direction unless otherwise specified. Vertical position is a special specification. Please specify this when ordering.

Note) If you will arrange the studs vertically, please insulate them carefully with insulating tubes, insulating tape, or similar because the insulation distance between the studs is insufficient.

Detail of connecting part

A	B	C	D	E	F
10.5	6.5	4	13	16	4

Panel cutout dimensions shown give an allowance of 1.0mm around the handle escutcheon.

Plug-in (Standard)

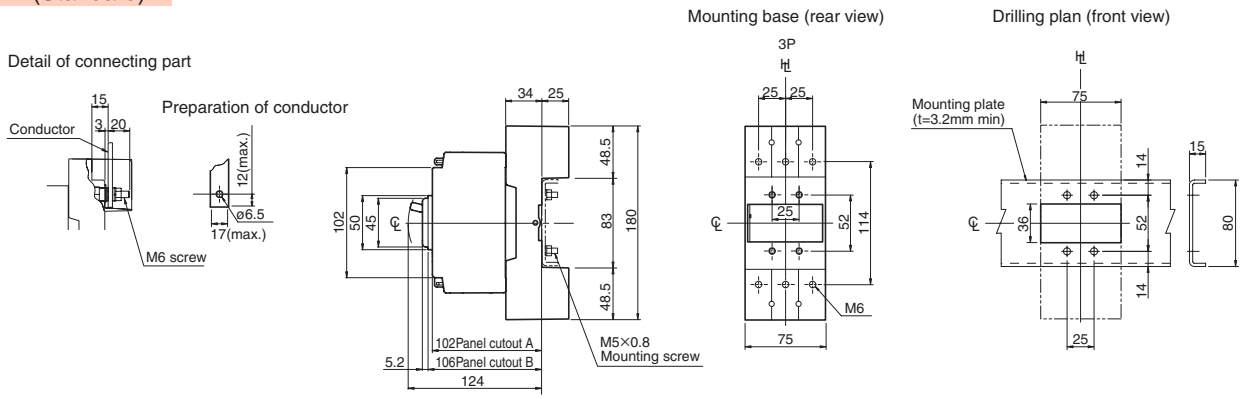

Flush-mounted

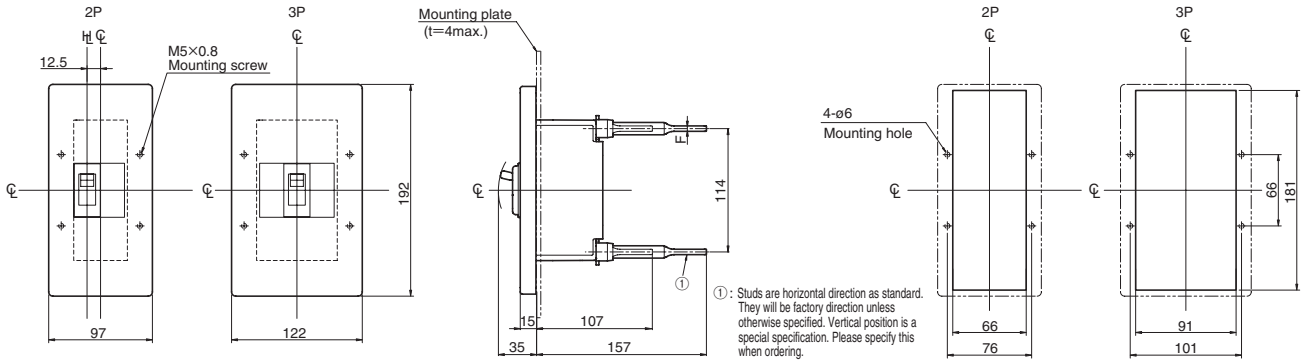

① : Studs are horizontal direction as standard. They will be factory direction unless otherwise specified. Vertical position is a special specification. Please specify this when ordering.

A	B	C	D	E	F
10.5	6.5	4	13	16	4

Please check the rear connected type for a detailed outline drawing of the terminals.

Note) If you will arrange the studs vertically, please insulate them carefully with insulating tubes, insulating tape, or similar because the insulation distance between the studs is insufficient.

Switch-disconnectors

PE125-NN

Ratings and Specifications

Frame size (A)			100		125			
Type			PE125-NN					
Number of poles			2	3	2	3		
■ Ratings								
Rated current, A			100		125			
Rated insulation voltage〔U_i〕 V			690		690			
Rated operational voltage V		AC	500		500			
		DC	250 ㉗		250 ㉗			
Rated impulse withstand voltage〔U_{imp}〕 kV			8		8			
Rated short circuit making capacity〔I_{cm}〕 kA peak			2.13		2.13			
Rated short time withstand current〔I_{cw}〕 kA			1.5 (0.3sec.)		1.5 (0.3sec.)			
■ Performance								
Utilization category		AC	AC-23A		AC-23A			
JIS C 8201-3 IEC 60947-3		DC	DC-22A		DC-22A			
Upstream breaker (OCPD) ㉙			PE125-NF		PE125-NF			
Weight (◉ marked standard type) kg			0.5	0.7	0.5	0.7		
■ Connections and Mountings								
Front-connected (FC)	Terminal screws		◉		◉			
	With extension bars		○ ㊸		○ ㊸			
Rear-connected (RC)	Flat bar studs		○		○			
Plug-in (PM) For switchboards	High-performance (PMB)		—		—			
	Standard (PMC)		—	○	—	○		
For distribution boards (PMD) ㊺			○		○			
Flush-mounted (FP)	With flat bar studs		○		○			
Draw-out type (DR)			—		—			
TemPlug70 (PG)			—		—			
DIN rail mount			—	○ ⑪	—	○ ⑪		
■ Accessories (optional)		Symbol						
Externally mounted: Motor operator		M C	—		—			
External operating handle	Breaker-mounted	H B	—	●	—	●		
	Door-mounted (variable depth)	H P	—	●	—	●		
Toggle extension		H A	—		—			
Mechanical interlock	Slide type	M S	—	●	—	●		
	Rear-connected type	M B	—		—			
	Link type	M L	—		—			
	Wire type	MW	—		—			
Toggle holder		H H	●		●			
Toggle lock		H L	●		●			
Terminal cover	For front-connected	C F	●		●			
	For rear-connected and plug-in	C R	●		●			
Terminal block for lead		T F	●		●			
Door flange		D F	●		●			
CE marking			Yes		Yes			
Colour of cover			Grey Blue		Grey Blue			
Trip button (Colour)			Yes (Red)		Yes (Red)			
Suitability for isolation			Yes		Yes			
Reverse connection			Yes		Yes			

Notes:

◉ : Standard. This configuration used unless otherwise specified.
○ : Optional standard. Specify when ordering. ● : "yes" or "available". — : "no" or "not available"
⑪ : Please order the DIN rail adapter separately. See page 6-152.
㉙ : Please use upstream breaker for overcurrent protection. Rated conditional short-circuit current [Icc] will be the same as Rated short-circuit breaking capacity of upstream breaker.
㊸ : For the extension bars, please place the order separately in parts.
㊺ : See page 7-172 for the outline dimensions.

Combinations of Internally Mounted Accessories (Optional)

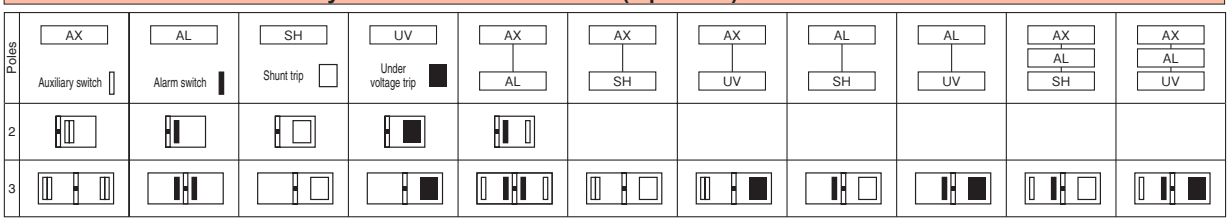

Note: For auxiliary switches or alarm switches, left-hand mounting has priority.

Outline dimensions (mm) PE125-NN

Front-connected

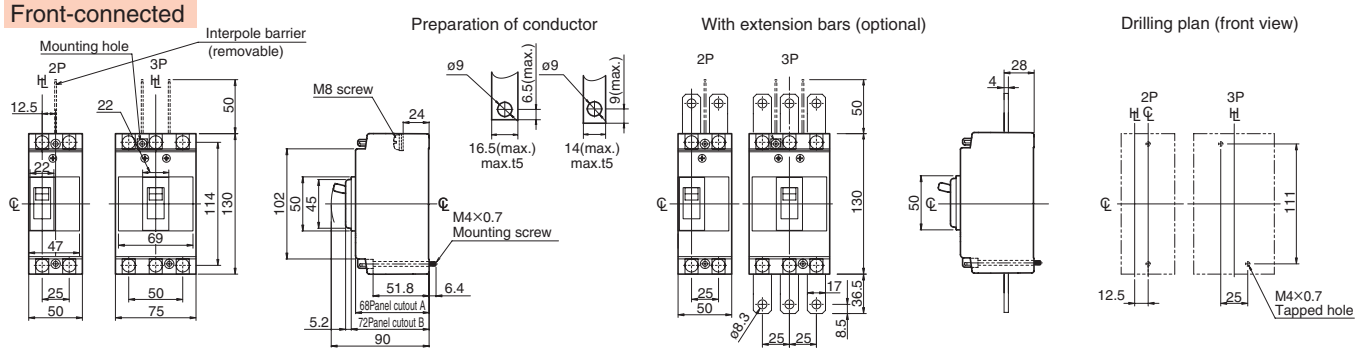

Rear-connected

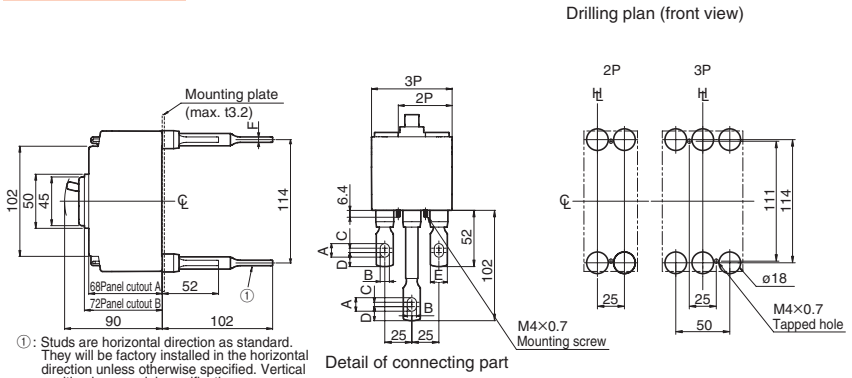

①: Studs are horizontal direction as standard. They will be factory installed in the horizontal direction unless otherwise specified. Vertical position is a special specification. Please specify this when ordering.

Note) If you will arrange the studs vertically, please insulate them carefully with insulating tubes, insulating tape, or similar because the insulation distance between the studs is insufficient.

Detail of connecting part

A	B	C	D	E	F
12.5	8.5	4	13	16	5

Panel cutout A (front view) Panel cutout B (front view)

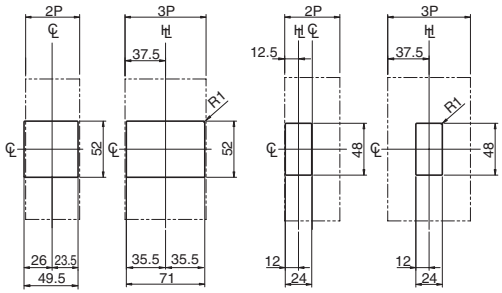

Panel cutout dimensions shown give an allowance of 1.0mm around the handle escutcheon.

Plug-in (Standard)

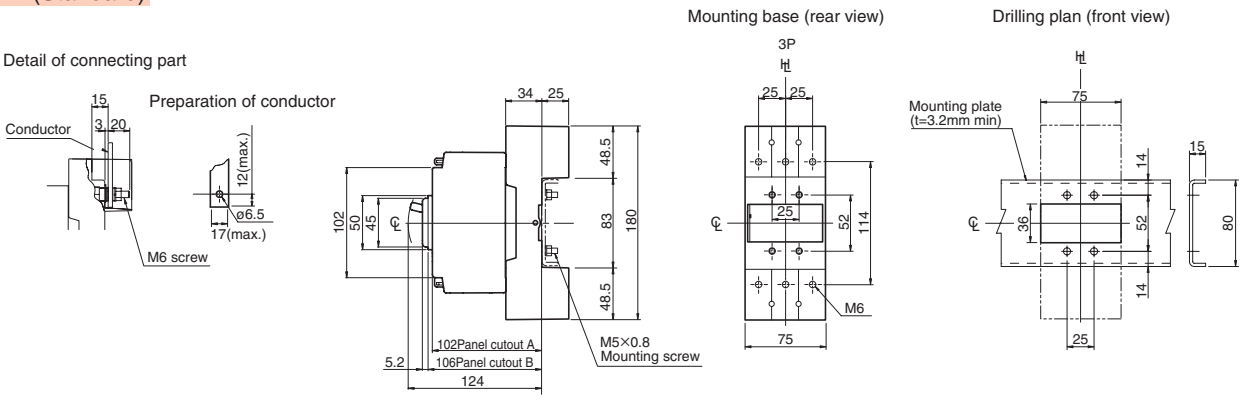

Flush-mounted

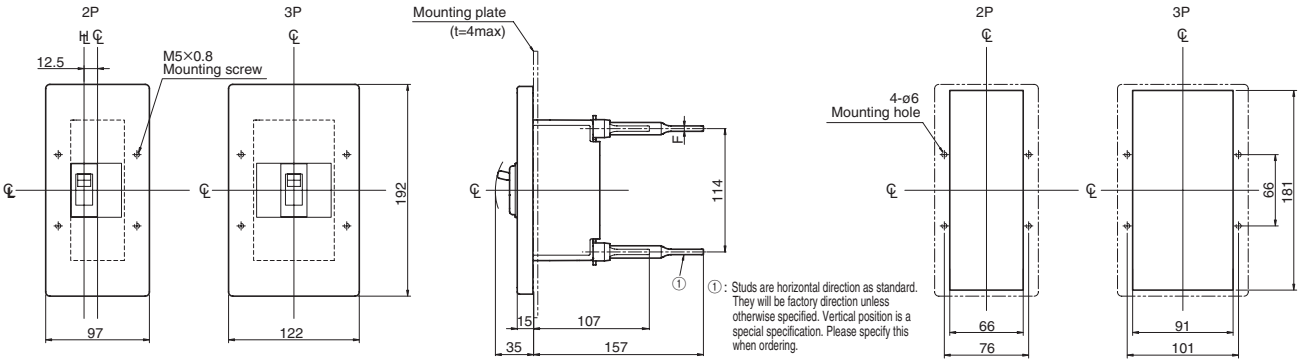

①: Studs are horizontal direction as standard. They will be factory direction unless otherwise specified. Vertical position is a special specification. Please specify this when ordering.

A	B	C	D	E	F
12.5	8.5	4	13	16	5

Please check the rear connected type for a detailed outline drawing of the terminals.

Note) If you will arrange the studs vertically, please insulate them carefully with insulating tubes, insulating tape, or similar because the insulation distance between the studs is insufficient.

Switch-disconnectors

S125-SN

Ratings and Specifications

Frame size (A)			100		125					
Type			S125-SN							
Number of poles			3	4	3	4				
■ Ratings										
Rated current, A			100		125					
Rated insulation voltage〔U_i〕 V			690		690					
Rated operational voltage V		AC	690		690					
		DC	250		250					
Rated impulse withstand voltage〔U_{imp}〕 kV			8		8					
Rated short circuit making capacity〔I_{cm}〕 kA peak			2.8		2.8					
Rated short time withstand current〔I_{cw}〕 kA			2 (0.3sec.)		2 (0.3sec.)					
■ Performance										
Utilization category		AC	AC-23A		AC-23A					
JIS C 8201-3 IEC 60947-3		DC	DC-22A		DC-22A					
Upstream breaker (OCPD) ㉙			S125-SF		S125-SF					
Weight (◉ marked standard type) kg			0.7	0.9	0.7	0.9				
■ Connections and Mountings										
Front-connected (FC)	Terminal screws		◉		◉					
	With extension bars		○ ㊸		○ ㊸					
Rear-connected (RC)	Flat bar studs		○		○					
Plug-in (PM) For switchboards	High-performance (PMB)		—		—					
	Standard (PMC)		○	—	○	—				
For distribution boards (PMD) ㊺			○	—	○	—				
Flush-mounted (FP)	With flat bar studs		○	—	○	—				
Draw-out type (DR)			—		—					
TemPlug70 (PG)			○	—	○	—				
DIN rail mount			○ ⑪		○ ⑪					
■ Accessories (optional)		Symbol								
Externally mounted: Motor operator		MC	—		—					
External operating handle	Breaker-mounted	HB	●		●					
	Door-mounted (variable depth)	HP	●		●					
Toggle extension		HA	—		—					
Mechanical interlock	Slide type	MS	●		●					
	Rear-connected type	MB	—		—					
	Link type	ML	—		—					
	Wire type	MW	—		—					
Toggle holder		HH	●		●					
Toggle lock		HL	●		●					
Terminal cover	For front-connected	CF	●		●					
	For rear-connected and plug-in	CR	●		●					
Terminal block for lead		TF	●		●					
Door flange		DF	●		●					
CE marking			Yes		Yes					
Colour of cover			Grey Blue		Grey Blue					
Trip button (Colour)			Yes (Red)		Yes (Red)					
Suitability for isolation			Yes		Yes					
Reverse connection			Yes		Yes					

Notes:

◉ : Standard. This configuration used unless otherwise specified.
○ : Optional standard. Specify when ordering. ● : "yes" or "available". — : "no" or "not available"
⑪ : Please order the DIN rail adapter separately. See page 6-152.
㉙ : Please use upstream breaker for overcurrent protection. Rated conditional short-circuit current [Icc] will be the same as Rated short-circuit breaking capacity of upstream breaker.
㊸ : For the extension bars, please place the order separately in parts.
㊺ : See page 7-172 for the outline dimensions.

Combinations of Internally Mounted Accessories (Optional)

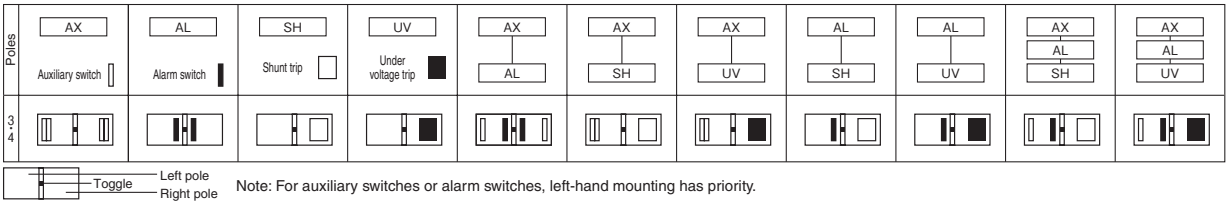

Note: For auxiliary switches or alarm switches, left-hand mounting has priority.

Outline dimensions (mm) S125-SN

Front-connected

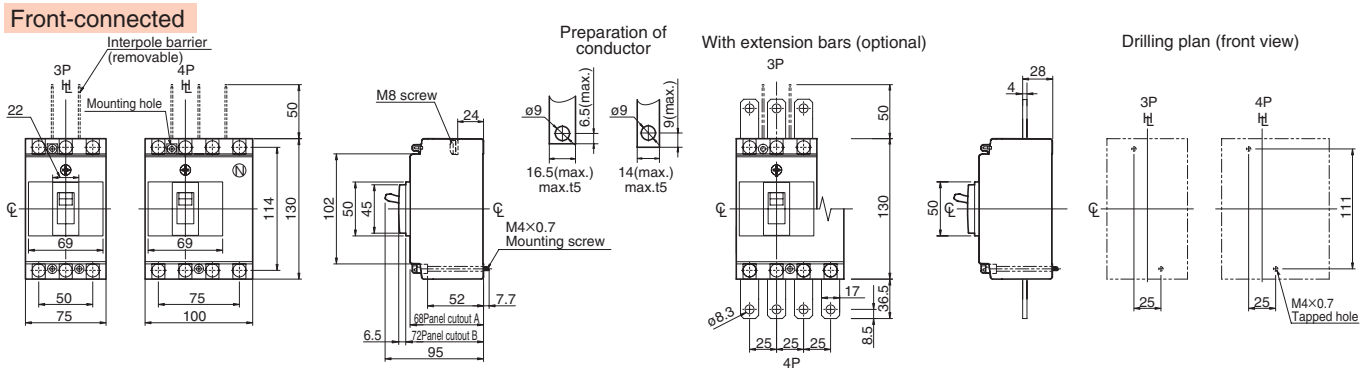

Rear-connected

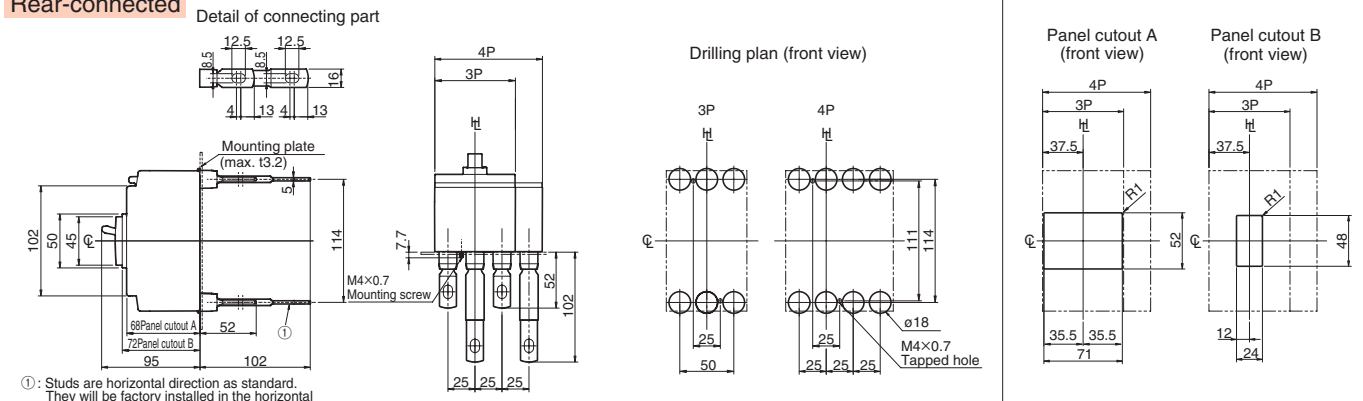

①: Studs are horizontal direction as standard. They will be factory installed in the horizontal direction unless otherwise specified. Vertical position is a special specification. Please specify this when ordering.

Note) If you will arrange the studs vertically, please insulate them carefully with insulating tubes, insulating tape, or similar because the insulation distance between the studs is insufficient.

Panel cutout dimensions shown give an allowance of 1.0mm around the handle escutcheon.

Plug-in (Standard)

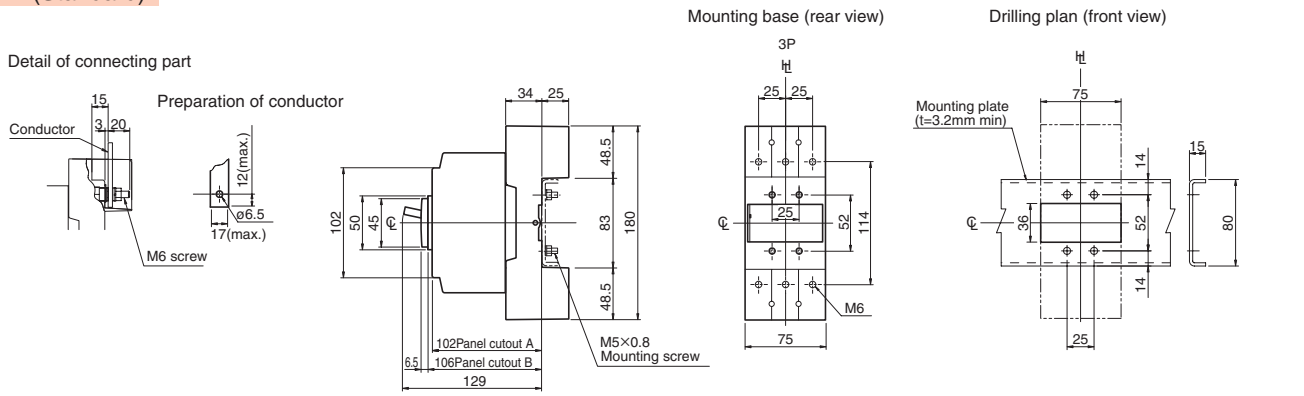

Flush-mounted

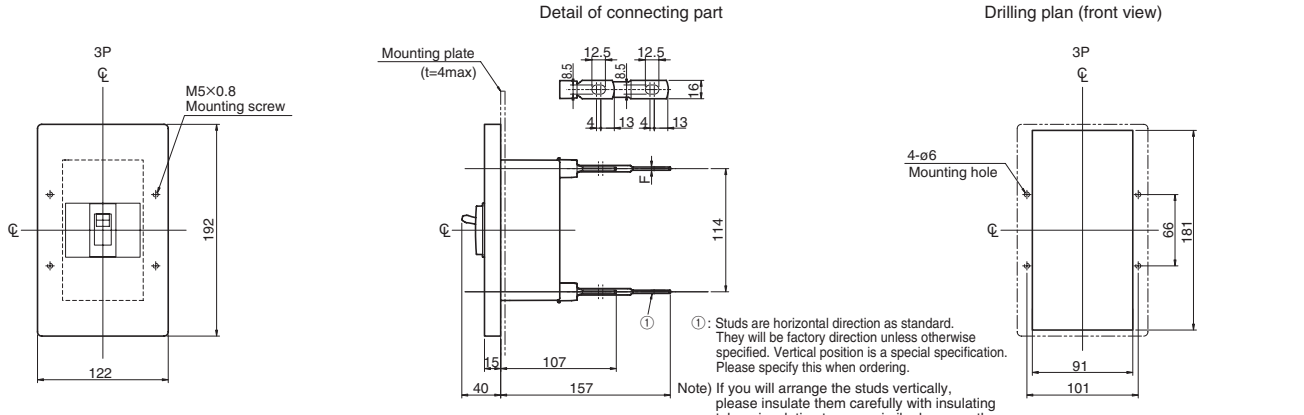

①: Studs are horizontal direction as standard. They will be factory direction unless otherwise specified. Vertical position is a special specification. Please specify this when ordering.

Note) If you will arrange the studs vertically, please insulate them carefully with insulating tubes, insulating tape, or similar because the insulation distance between the studs is insufficient.

7 Characteristics and Outline Dimensions TemBreak PRO

Switch-disconnectors

PS125-NN

Ratings and Specifications

Frame size (A)			100		125					
Type			PS125-NN							
Number of poles			3	4	3	4				
■ Ratings										
Rated current, A			100		125					
Rated insulation voltage〔U_i〕 V			800		800					
Rated operational voltage V		AC	690		690					
		DC	250		250					
Rated impulse withstand voltage〔U_{imp}〕 kV			8		8					
Rated short circuit making capacity〔I_{cm}〕 kA peak			2.8		2.8					
Rated short time withstand current〔I_{cw}〕 kA			2 (1sec.)		2 (1sec.)					
■ Performance										
Utilization category		AC	AC-23A		AC-23A					
JIS C 8201-3 IEC 60947-3		DC	DC-22A		DC-22A					
Upstream breaker (OCPD) ㉙			PS125-NF		PS125-NF					
Weight (◉ marked standard type) kg			1.0	1.3	1.0	1.3				
■ Connections and Mountings										
Front-connected (FC)	Terminal screws		◉		◉					
	With extension bars		○ ㊸		○ ㊸					
Rear-connected (RC)	Flat bar studs		○		○					
Plug-in (PM) For switchboards	High-performance (PMB)		○ ㊿		○ ㊿					
	Standard (PMC)		○	—	○	—				
For distribution boards (PMD) ㊸			○	—	○	—				
lush-mounted (FP)	With flat bar studs		○		○					
Draw-out type (DR)			—		—					
TemPlug70 (PG)			○	—	○	—				
DIN rail mount			○ ⑪		○ ⑪					
■ Accessories (optional)		Symbol								
Externally mounted: Motor operator		M C	●		●					
External operating handle	Breaker-mounted	H B	●		●					
	Door-mounted (variable depth)	H P	●		●					
Toggle extension		H A	—		—					
Mechanical interlock	Slide type	M S	●		●					
	Rear-connected type	M B	—		—					
	Link type	M L	●		●					
	Wire type	M W	●		●					
Toggle holder		H H	●		●					
Toggle lock		H L	●		●					
Terminal cover	For front-connected	C F	●		●					
	For rear-connected and plug-in	C R	●		●					
Terminal block for lead		T F	●		●					
Door flange		D F	●		●					
CE marking			Yes		Yes					
Colour of cover			Grey Blue		Grey Blue					
Trip button (Colour)			Yes (Red)		Yes (Red)					
Suitability for isolation			Yes		Yes					
Reverse connection			Yes		Yes					

Notes:

◉ : Standard. This configuration used unless otherwise specified.
○ : Optional standard. Specify when ordering. ● : "yes" or "available". — : "no" or "not available"
⑪ : Please order the DIN rail adapter separately. See page 6-152.
㉙ : Please use upstream breaker for overcurrent protection. Rated conditional short-circuit current [Icc] will be the same as Rated short-circuit breaking capacity of upstream breaker.
㊿ : A safety trip function is provided.
㊸ : For the extension bars, please place the order separately in parts.
㊸ : See page 7-171 for the outline dimensions.

Combinations of Internally Mounted Accessories (Optional)

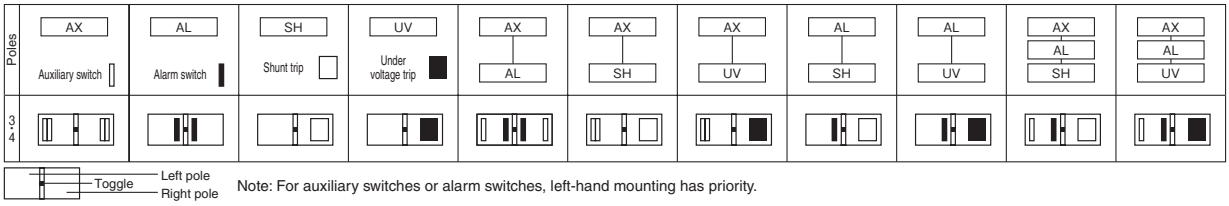

Note: For auxiliary switches or alarm switches, left-hand mounting has priority.

Outline dimensions (mm) PS125-NN

Front-connected

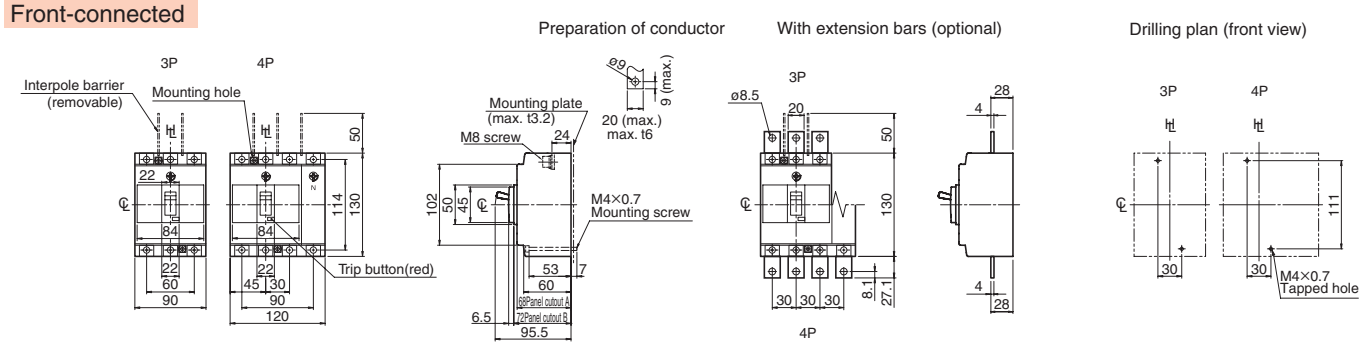

Rear-connected

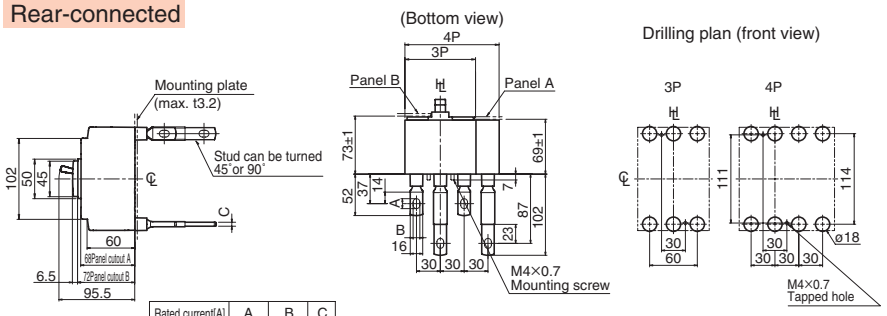

Rated current[A]	A	B	C
15 — 50	12.5	ø8.5	4
60 — 125	12.5	ø8.5	5

Note: Studs are factory installed in horizontal direction both on the line and load sides.

Panel cutout dimensions shown give an allowance of 1.0mm around the handle escutcheon.

Plug-in (Standard)

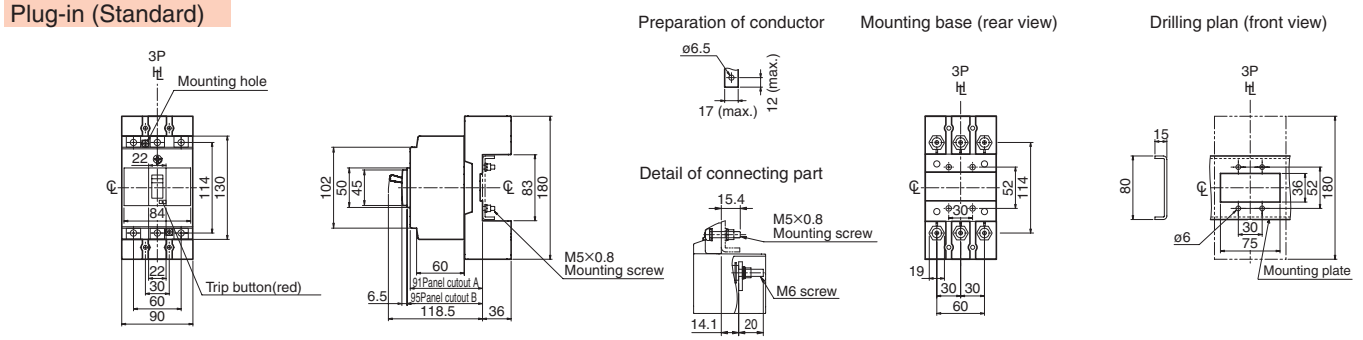

Plug-in (High-performance)

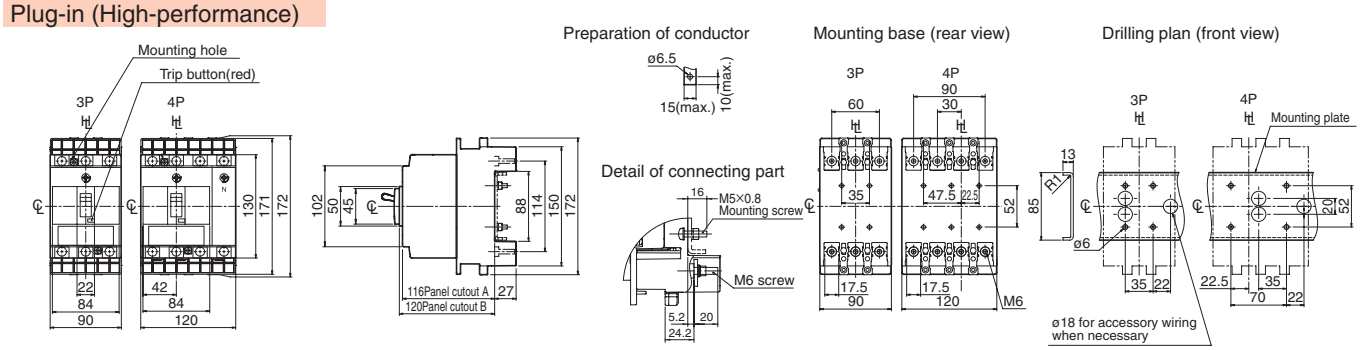

Flush-mounted

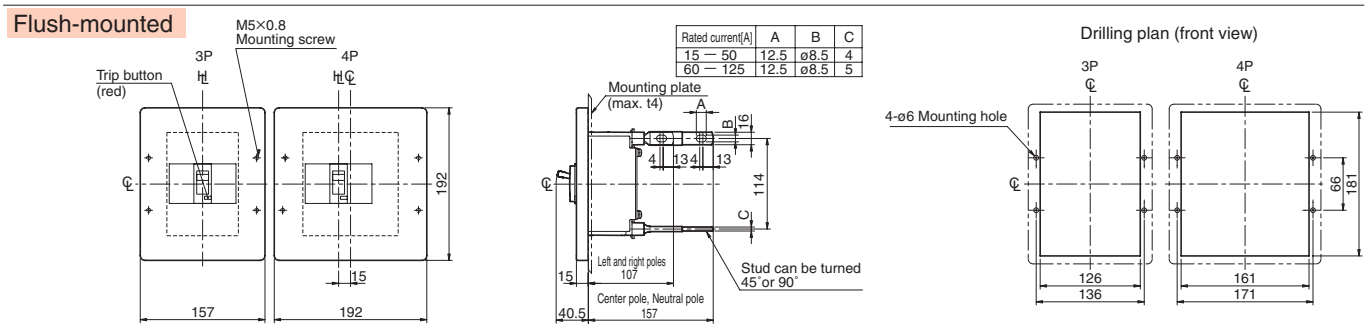

Rated current[A]	A	B	C
15 — 50	12.5	ø8.5	4
60 — 125	12.5	ø8.5	5

Note: Studs are factory installed in horizontal direction both on the line and load sides.

Switch-disconnectors

S250-SN

Ratings and Specifications

Frame size (A)			225		250					
Type			S250-SN							
Number of poles			3	4	3	4				
■ Ratings										
Rated current, A			225		250					
Rated insulation voltage〔U_i〕 V			690		690					
Rated operational voltage V		AC	690		690					
		DC	250		250					
Rated impulse withstand voltage〔U_{imp}〕 kV			8		8					
Rated short circuit making capacity〔I_{cm}〕 kA peak			6		6					
Rated short time withstand current〔I_{cw}〕 kA			3 (0.3sec.)		3 (0.3sec.)					
■ Performance										
Utilization category		AC	AC-23A		AC-23A					
JIS C 8201-3 IEC 60947-3		DC	DC-22A		DC-22A					
Upstream breaker (OCPD) ㉙			S250-SF		S250-SF					
Weight (◉ marked standard type) kg			1.5	1.9	1.5	1.9				
■ Connections and Mountings										
Front-connected (FC)	Terminal screws		◉		◉					
	With extension bars		○ ㊸		○ ㊸					
Rear-connected (RC)	Flat bar studs		○		○					
Plug-in (PM) For switchboards	High-performance (PMB)		—		—					
	Standard (PMC)		○		○					
For distribution boards (PMD)			—		—					
Flush-mounted (FP)	With flat bar studs		○		○					
Draw-out type (DR)			—		—					
TemPlug70 (PG)			○	—	○	—				
DIN rail mount			—		—					
■ Accessories (optional)		Symbol								
Externally mounted: Motor operator		M C	●		●					
External operating handle	Breaker-mounted	H B	●		●					
	Door-mounted (variable depth)	H P	●		●					
Toggle extension		H A	—		—					
Mechanical interlock	Slide type	M S	●		●					
	Rear-connected type	M B	—		—					
	Link type	M L	●		●					
	Wire type	M W	●		●					
Toggle holder		H H	●		●					
Toggle lock		H L	●		●					
Terminal cover	For front-connected	C F	●		●					
	For rear-connected and plug-in	C R	●		●					
Terminal block for lead		T F	●		●					
Door flange		D F	●		●					
CE marking			Yes		Yes					
Colour of cover			Grey Blue		Grey Blue					
Trip button (Colour)			Yes (Red)		Yes (Red)					
Suitability for isolation			Yes		Yes					
Reverse connection			Yes		Yes					

Notes:

◉ : Standard. This configuration used unless otherwise specified.

○ : Optional standard. Specify when ordering. ● : "yes" or "available". — : "no" or "not available"

㉙ : Please use upstream breaker for overcurrent protection. Rated conditional short-circuit current [Icc] will be the same as Rated short-circuit breaking capacity of upstream breaker.

㊸ : For the extension bars, please place the order separately in parts.

Combinations of Internally Mounted Accessories (Optional)

Poles	AX	AL	SH	UV	AX–AL	AX–SH	AX–UV	AL–SH	AL–UV	AX–AL–SH	AX–AL–UV
	Auxiliary switch	Alarm switch	Shunt trip	Under voltage trip							
3, 4	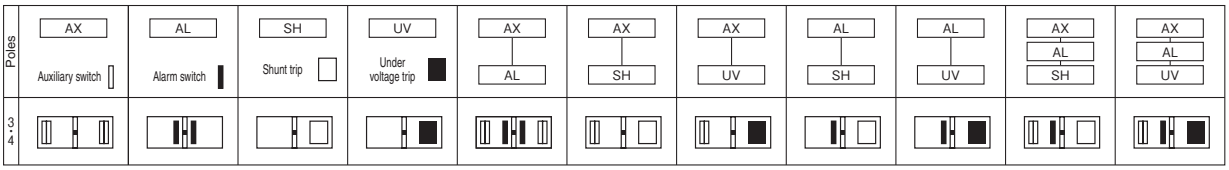										

Toggle — Left pole / Right pole

Note: For auxiliary switches or alarm switches, left-hand mounting has priority.

Outline dimensions (mm) S250-SN

Front-connected

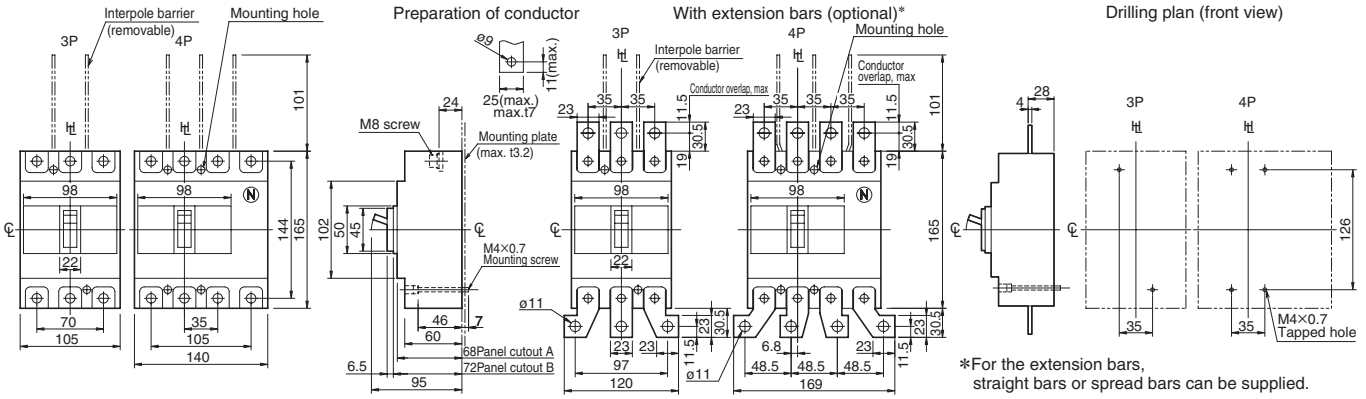

*For the extension bars, straight bars or spread bars can be supplied.

Rear-connected

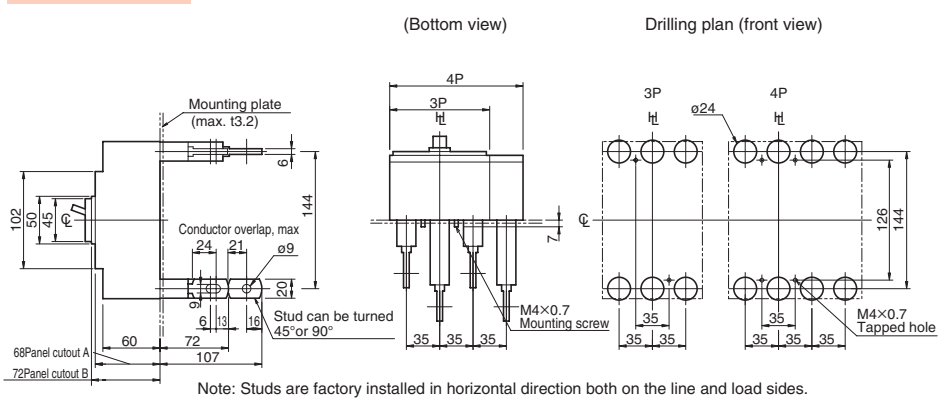

Note: Studs are factory installed in horizontal direction both on the line and load sides.

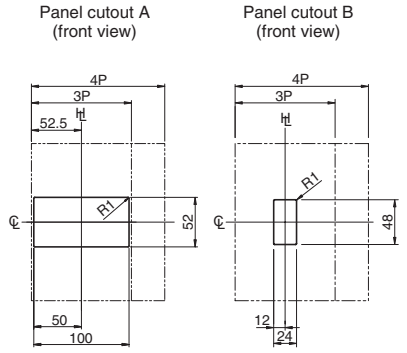

Panel cutout dimensions shown give an allowance of 1.0mm around the handle escutcheon.

Plug-in (Standard)

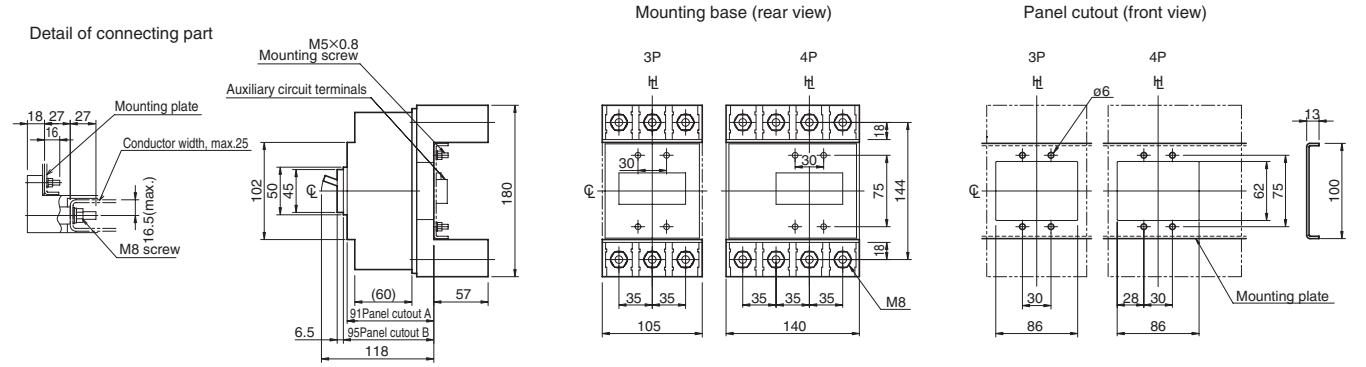

Flush-mounted

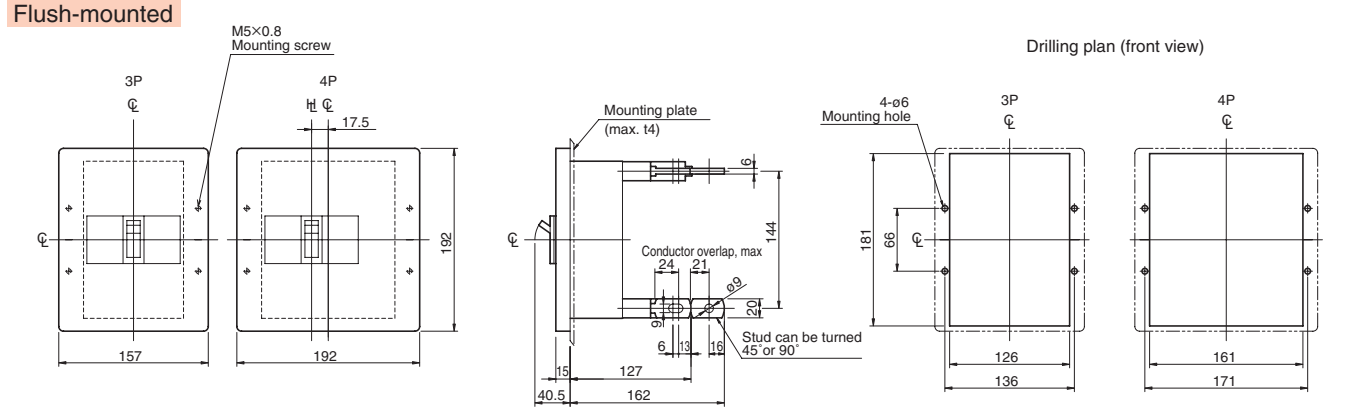

Switch-disconnectors

PS250-NN

Ratings and Specifications

Frame size (A)			225		250					
Type			PS250-NN							
Number of poles			3	4	3	4				
■ Ratings										
Rated current, A			225		250					
Rated insulation voltage〔U_i〕 V			800		800					
Rated operational voltage V		AC	690		690					
		DC	250		250					
Rated impulse withstand voltage〔U_{imp}〕 kV			8		8					
Rated short circuit making capacity〔I_{cm}〕 kA peak			5		5					
Rated short time withstand current〔I_{cw}〕 kA			3.6 (1sec.)		3.6 (1sec.)					
■ Performance										
Utilization category		AC	AC-23A		AC-23A					
JIS C 8201-3 IEC 60947-3		DC	DC-22A		DC-22A					
Upstream breaker (OCPD) ㉙			PS250-PF		PS250-PF					
Weight (◉ marked standard type) kg			1.5	2.0	1.5	2.0				
■ Connections and Mountings										
Front-connected (FC)	Terminal screws		◉		◉					
	With extension bars		○ ㊸		○ ㊸					
Rear-connected (RC)	Flat bar studs		○		○					
Plug-in (PM) For switchboards	High-performance (PMB)		○ ㊿		○ ㊿					
	Standard (PMC)		○	—	○	—				
For distribution boards (PMD)			—		—					
Flush-mounted (FP)	With flat bar studs		○		○					
Draw-out type (DR)			▲		▲					
TemPlug70 (PG)			○	—	○	—				
DIN rail mount			—		—					
■ Accessories (optional)		Symbol								
Externally mounted: Motor operator		M C	●		●					
External operating handle	Breaker-mounted	H B	●		●					
	Door-mounted (variable depth)	H P	●		●					
Toggle extension		H A	—		—					
Mechanical interlock ⑨	Slide type	M S	●		●					
	Rear-connected type	M B	—		—					
	Link type	M L	●		●					
	Wire type	M W	●		●					
Toggle holder		H H	●		●					
Toggle lock		H L	●		●					
Terminal cover	For front-connected	C F	●		●					
	For rear-connected and plug-in	C R	●		●					
Terminal block for lead		T F	●		●					
Door flange		D F	●		●					
CE marking			Yes		Yes					
Colour of cover			Grey Blue		Grey Blue					
Trip button (Colour)			Yes (Red)		Yes (Red)					
Suitability for isolation			Yes		Yes					
Reverse connection			Yes		Yes					

Notes:

◉ : Standard. This configuration used unless otherwise specified. ○ : Optional standard. Specify when ordering.
▲ : Semi-standard. ● : "yes" or "available". — : "no" or "not available"
⑨ : Mechanical interlocks cannot be applied to draw-out type (DR).
㉙ : Please use upstream breaker for overcurrent protection. Rated conditional short-circuit current [Icc] will be the same as Rated short-circuit breaking capacity of upstream breaker.
㊿ : A safety trip function is provided.
㊸ : For the extension bars, please place the order separately in parts.

Combinations of Internally Mounted Accessories (Optional)

Poles	AX Auxiliary switch	AL Alarm switch	SH Shunt trip	UV Under voltage trip	AX–AL	AX–SH	AX–UV	AL–SH	AL–UV	AX–AL–SH	AX–AL–UV
3, 4											

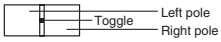

Note: For auxiliary switches or alarm switches, left-hand mounting has priority.

Outline dimensions (mm) PS250-NN

Front-connected

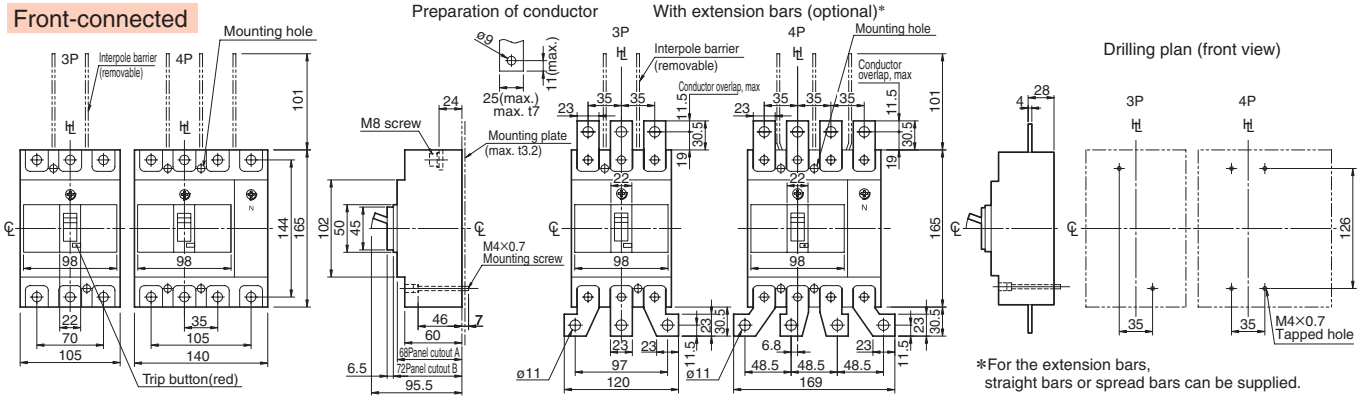

Rear-connected

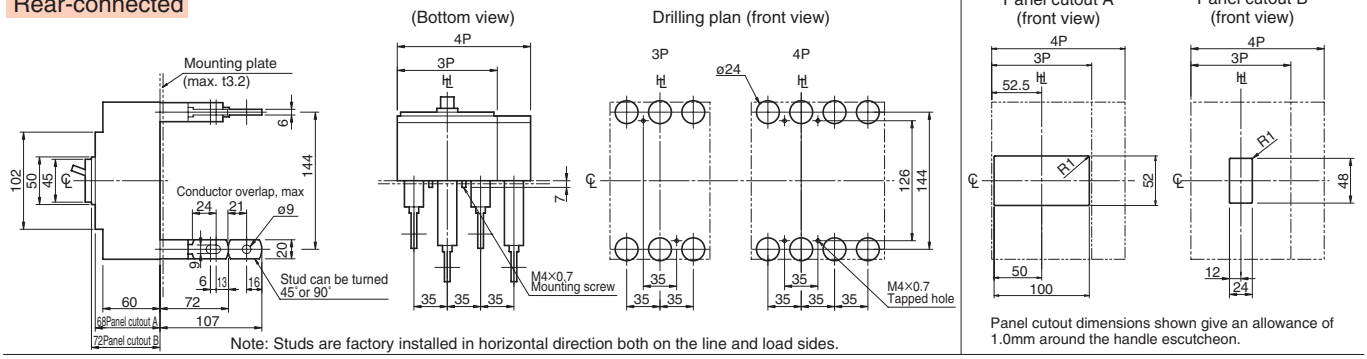

Note: Studs are factory installed in horizontal direction both on the line and load sides.

Panel cutout dimensions shown give an allowance of 1.0mm around the handle escutcheon.

Plug-in (Standard)

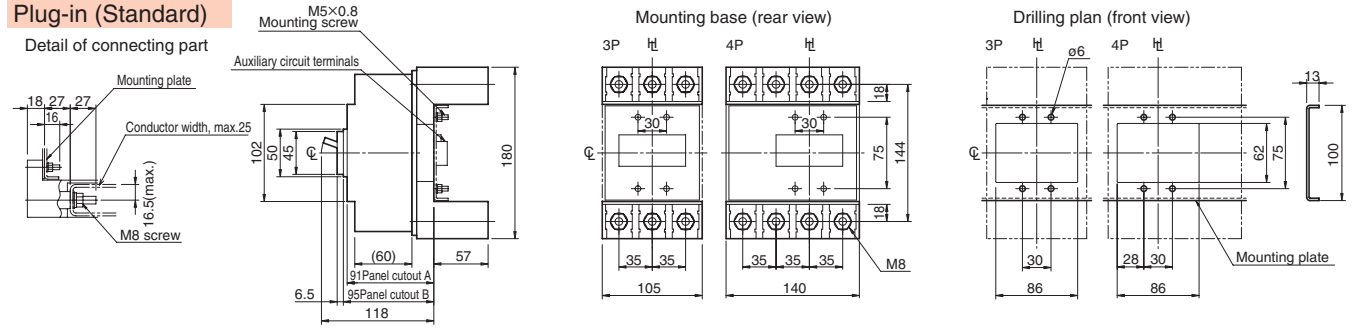

Plug-in (High-performance)

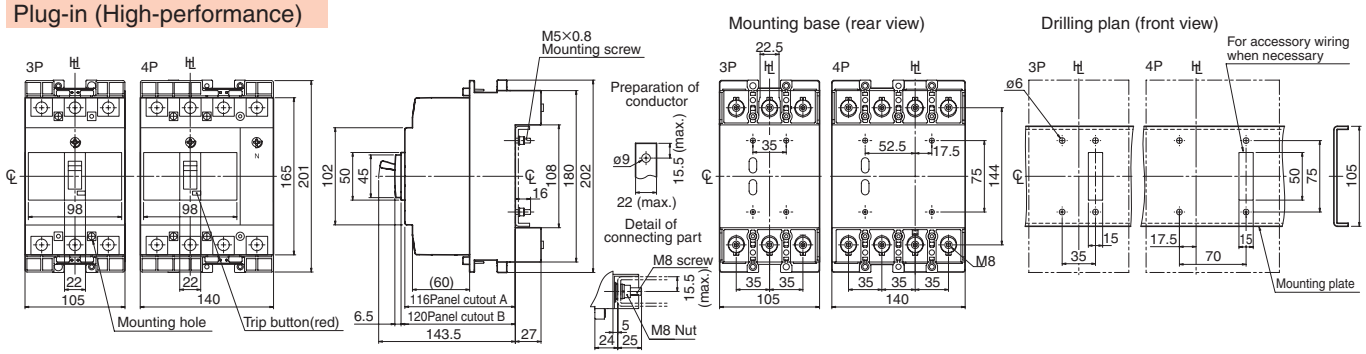

Flush-mounted

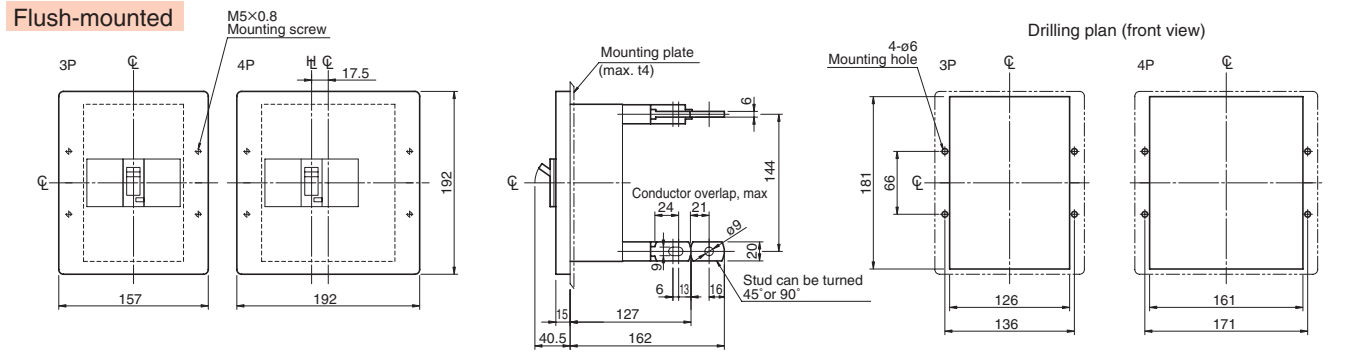

Switch-disconnectors

PS400-NN

Ratings and Specifications

Frame size (A)		400	
Type		PS400-NN	
Number of poles		3	4
■ Ratings			
Rated current, A		400	
Rated insulation voltage〔U_i〕 V		800	
Rated operational voltage V	AC	690	
	DC	250	
Rated impulse withstand voltage〔U_{imp}〕 kV		8	
Rated short circuit making capacity〔I_{cm}〕 kA peak		7.6	
Rated short time withstand current〔I_{cw}〕 kA		5 (1sec.)	
■ Performance			
Utilization category	AC	AC-23A	
JIS C 8201-3 IEC 60947-3	DC	DC-22A	
Upstream breaker (OCPD) ㉙		PS400-NF	
Weight (◉ marked standard type) kg		5.4	7.2
■ Connections and Mountings			
Front-connected (FC)	Terminal screws	◉	
	With extension bars	○	
Rear-connected (RC)	Flat bar studs	○	
Plug-in (PM) For switchboards	High-performance (PMB)	○ ㊿	
	Standard (PMC)	○	—
For distribution boards (PMD)		—	
Flush-mounted (FP)	With flat bar studs	○	
Draw-out type (DR)		▲	
TemPlug70 (PG)		○	—
DIN rail mount		—	
■ Accessories (optional)	Symbol		
Externally mounted: Motor operator	M C	●	
External operating handle: Breaker-mounted	H B	●	
External operating handle: Door-mounted (variable depth)	H P	●	
Toggle extension	H A	●	
Mechanical interlock ⑨: Slide type	M S	●	
Mechanical interlock ⑨: Rear-connected type	M B	—	
Mechanical interlock ⑨: Link type	M L	●	
Mechanical interlock ⑨: Wire type	MW	●	
Toggle holder	H H	●	
Toggle lock	H L	●	
Terminal cover: For front-connected	C F	●	
Terminal cover: For rear-connected and plug-in	C R	●	
Terminal block for lead	T F	●	
Door flange	D F	●	
CE marking		Yes	
Colour of cover		Grey Blue	
Trip button (Colour)		Yes (Red)	
Suitability for isolation		Yes	
Reverse connection		Yes	

Notes:

◉ : Standard. This configuration used unless otherwise specified. ○ : Optional standard. Specify when ordering.
▲ : Semi-standard. ● : "yes" or "available". — : "no" or "not available"
⑨ : Mechanical interlocks cannot be applied to draw-out type (DR).
㉙ : Please use upstream breaker for overcurrent protection. Rated conditional short-circuit current [Icc] will be the same as Rated short-circuit breaking capacity of upstream breaker.
㊿ : A safety trip function is provided.

Combinations of Internally Mounted Accessories (Optional)

Poles	AX Auxiliary switch	AL Alarm switch	SH Shunt trip	UV Under voltage trip	AX–AL	AX–SH	AX–UV	AL–SH	AL–UV	AX–AL–SH	AX–AL–UV
3, 4											

Toggle — Left pole / Right pole

Note: For auxiliary switches or alarm switches, left-hand mounting has priority.

Outline dimensions (mm) PS400-NN

Front-connected

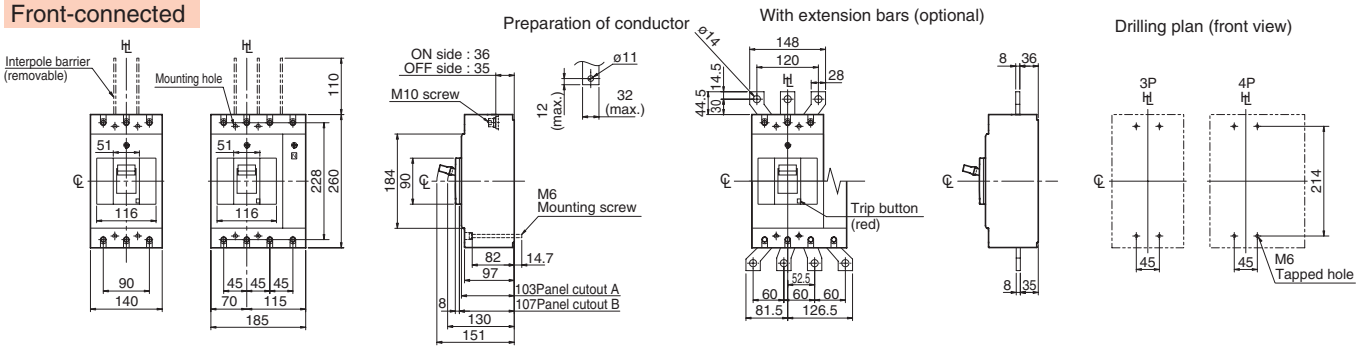

Rear-connected

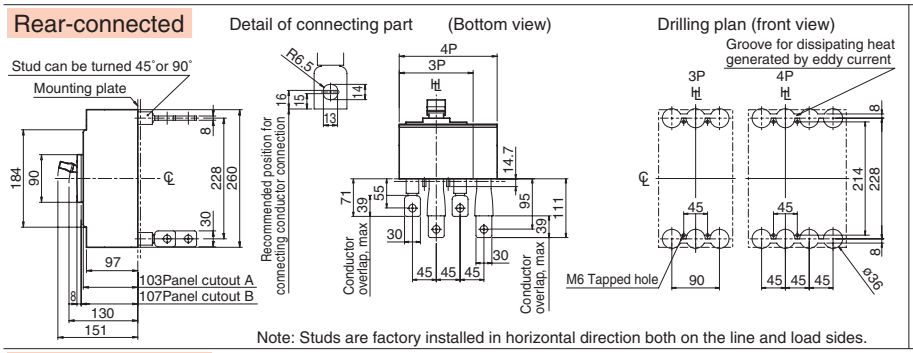

Note: Studs are factory installed in horizontal direction both on the line and load sides.

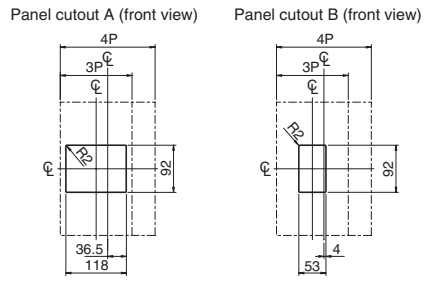

Panel cutout dimensions shown give an allowance of 1.0mm around the handle escutcheon.

Plug-in (Standard)

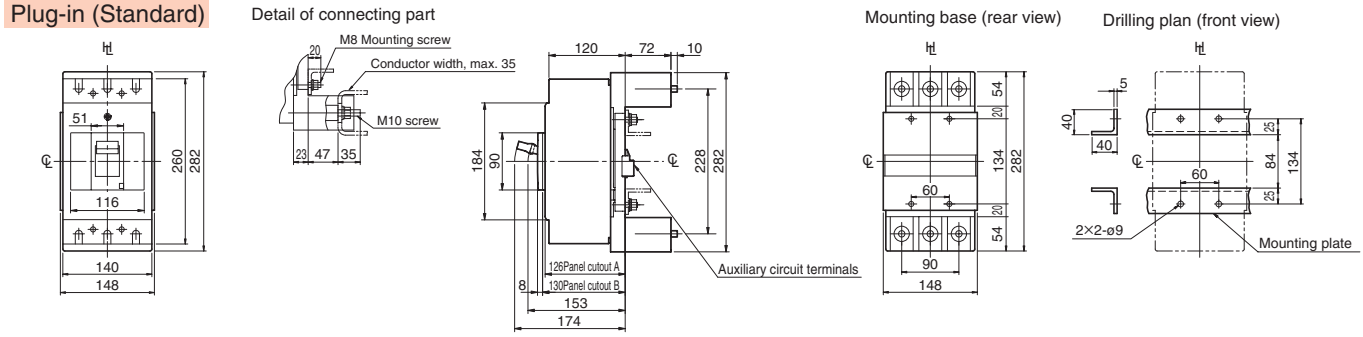

Plug-in (High-performance)

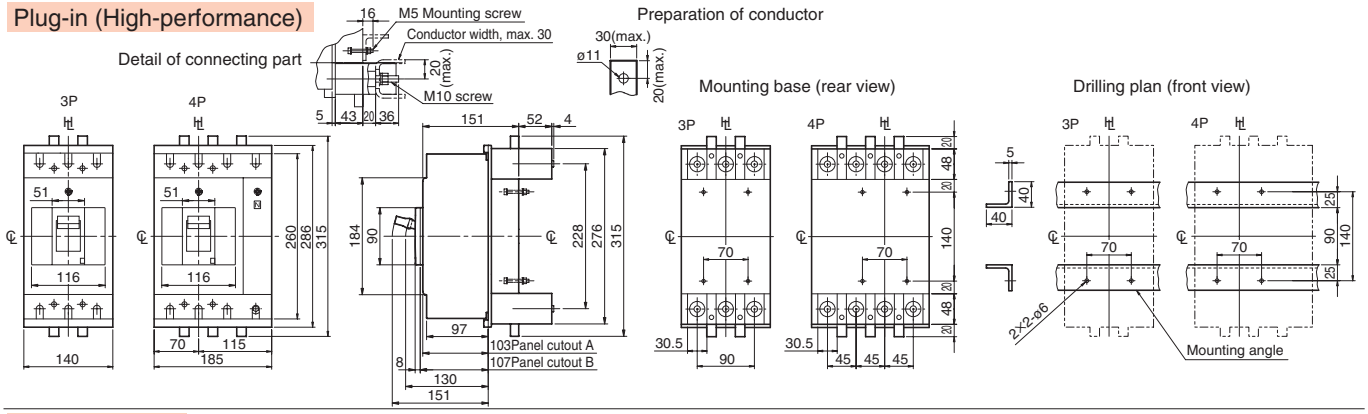

Flush-mounted

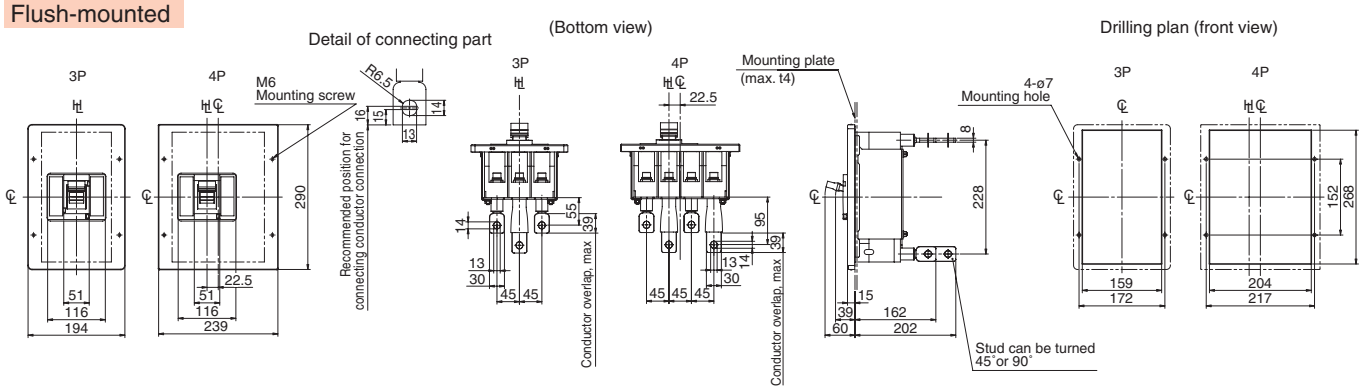

Switch-disconnectors

PS630-NN

Ratings and Specifications

Frame size (A)			600			
Type			**PS630-NN**			
Number of poles			3	4		
■ Ratings						
Rated current, A			600 ⑲			
Rated insulation voltage〔U_i〕 V			800			
Rated operational voltage V		AC	690			
		DC	250			
Rated impulse withstand voltage〔U_{imp}〕 kV			8			
Rated short circuit making capacity〔I_{cm}〕 kA peak			13			
Rated short time withstand current〔I_{cw}〕 kA			7.6 (1sec.)			
■ Performance						
Utilization category JIS C 8201-3 IEC 60947-3		AC	AC-23A(500A) AC-22A(600A)			
		DC	DC-22A			
Upstream breaker (OCPD) ㉙			**PS630-NF**			
Weight (◉ marked standard type) kg			5.7	7.7		
■ Connections and Mountings						
Front-connected (FC)	Terminal screws		—			
	With extension bars		◉			
Rear-connected (RC)	Flat bar studs		○			
Plug-in (PM) For switchboards	High-performance (PMB)		○ ㊿			
	Standard (PMC)		○	—		
For distribution boards (PMD)			—			
Flush-mounted (FP)	With flat bar studs		○			
Draw-out type (DR)			▲			
TemPlug70 (PG)			○	—		
DIN rail mount			—			
■ Accessories (optional)		Symbol				
Externally mounted: Motor operator		M C	●			
External operating handle	Breaker-mounted	H B	●			
	Door-mounted (variable depth)	H P	●			
Toggle extension		H A	●			
Mechanical interlock ⑨	Slide type	M S	●			
	Rear-connected type	M B	—			
	Link type	M L	●			
	Wire type	MW	●			
Toggle holder		H H	●			
Toggle lock		H L	●			
Terminal cover	For front-connected	C F	●			
	For rear-connected and plug-in	C R	●			
Terminal block for lead		T F	●			
Door flange		D F	●			
CE marking			Yes			
Colour of cover			Grey Blue			
Trip button (Colour)			Yes (Red)			
Suitability for isolation			Yes			
Reverse connection			Yes			

Notes:

◉ : Standard. This configuration used unless otherwise specified. ○ : Optional standard. Specify when ordering.
▲ : Semi-standard. ● : "yes" or "available". — : "no" or "not available"
⑨ : Mechanical interlocks cannot be applied to draw-out type (DR).
㉙ : Please use upstream breaker for overcurrent protection. Rated conditional short-circuit current [Icc] will be the same as Rated short-circuit breaking capacity of upstream breaker.
㊿ : A safety trip function is provided.
⑲ : Plug-in type (PM), draw-out type (DR), and TemPlug70 (PG) are only rated current 500A.

Combinations of Internally Mounted Accessories (Optional)

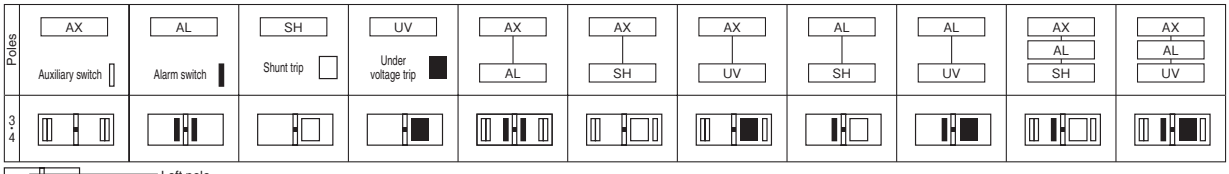

Note: For auxiliary switches or alarm switches, left-hand mounting has priority.

Outline dimensions (mm) PS630-NN

Front-connected

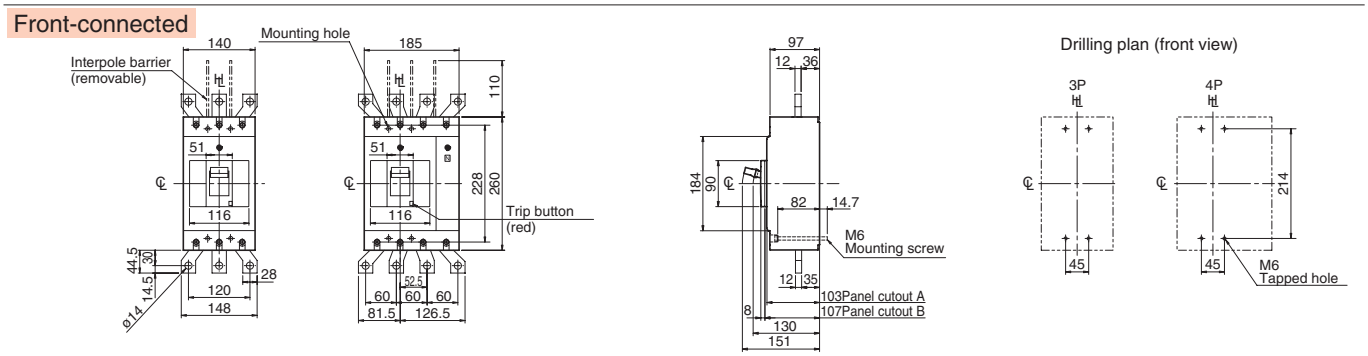

Rear-connected

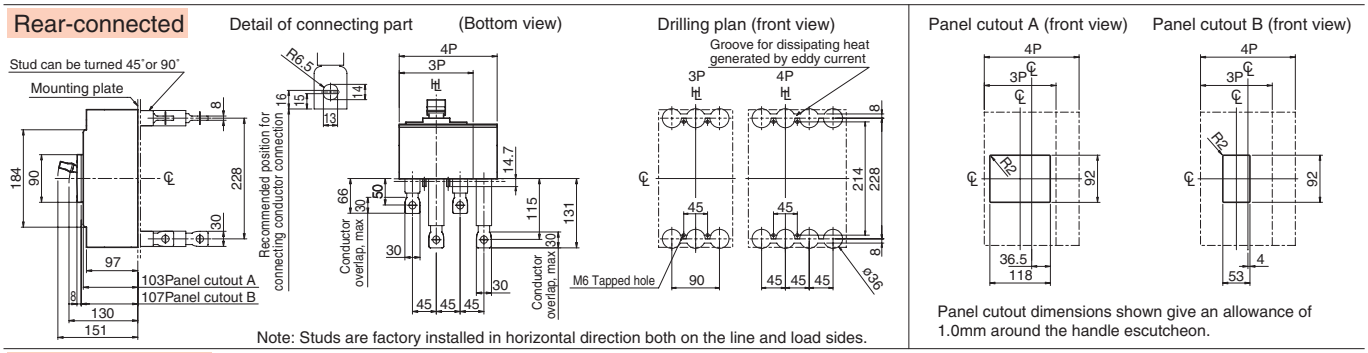

Note: Studs are factory installed in horizontal direction both on the line and load sides.

Panel cutout dimensions shown give an allowance of 1.0mm around the handle escutcheon.

Plug-in (Standard)

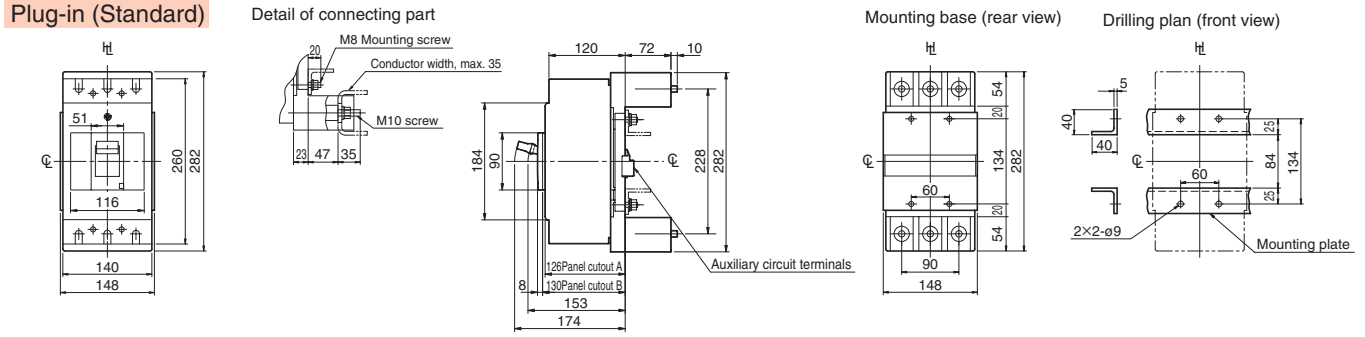

Plug-in (High-performance)

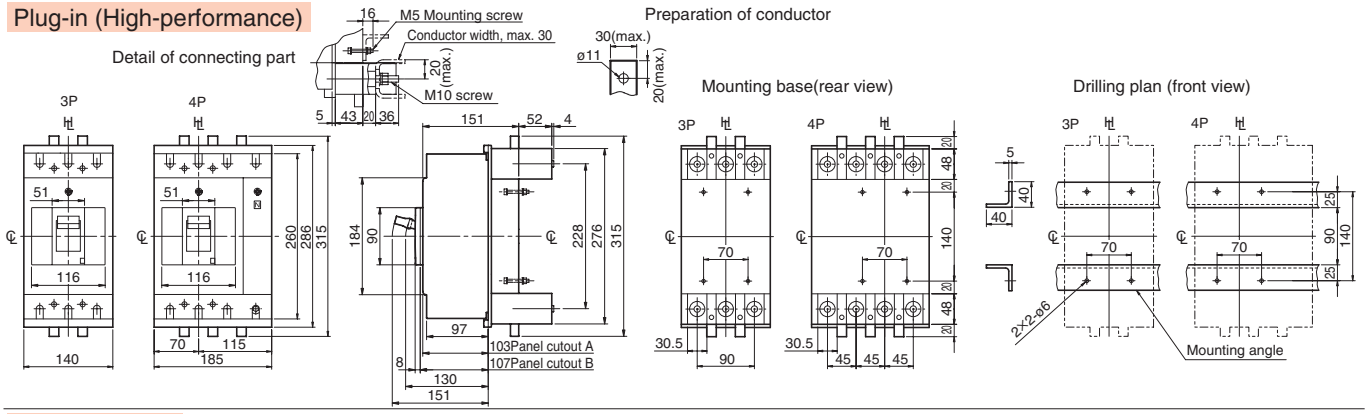

Flush-mounted

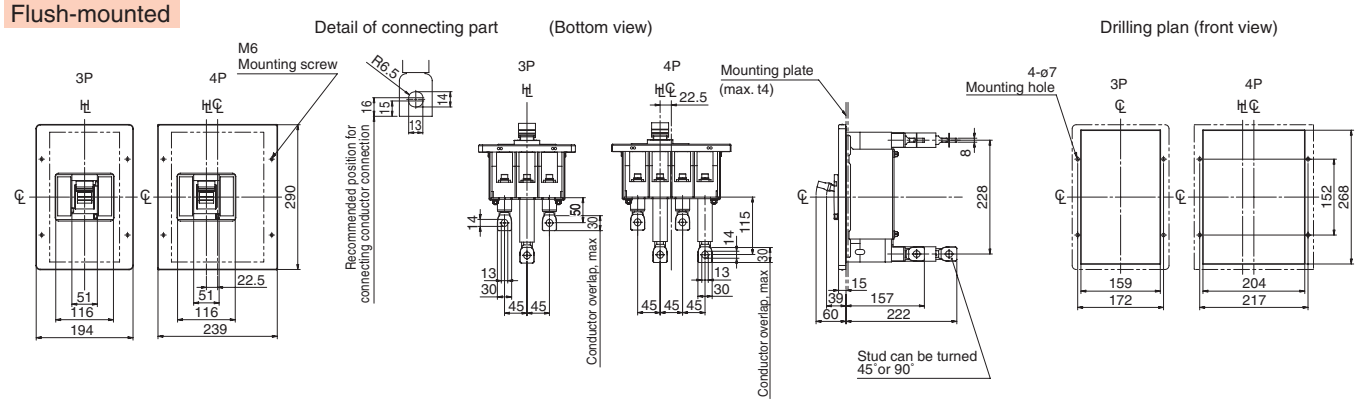

Switch-disconnectors

S630-GN, S800-NN, S1000-NN

Ratings and Specifications

Frame size (A)		600		630		800		1000		
Type		**S630-GN**				**S800-NN**		**S1000-NN**		
Number of poles		3	4	3	4	3	4	3	4	
■ Ratings										
Rated current, A		600		630		800		1000		
Rated insulation voltage〔U_i〕 V		690		690		690		690		
Rated operational voltage V	AC	690		690		690		690		
	DC	250		250		250		250		
Rated impulse withstand voltage〔U_{imp}〕 kV		8		8		8		8		
Rated short circuit making capacity〔I_{cm}〕 kA peak		17		17		17		17		
Rated short time withstand current〔I_{cw}〕 kA		10 (0.3sec.)		10 (0.3sec.)		10 (0.3sec.)		10 (0.3sec.)		
■ Performance										
Utilization category	AC	AC-23A		AC-23A		AC-23A		AC-23A		
JIS C 8201-3 IEC 60947-3	DC	DC-22A		DC-22A		DC-22A		DC-22A		
Upstream breaker (OCPD) ㉙		**S630-NF**		**S630-NF**		**S800-NF**		**S1000-CE**		
Weight (◉ marked standard type) kg		8.0	11.0	8.0	11.0	8.5	11.5	10.4	14.0	
■ Connections and Mountings										
Front-connected (FC)	Terminal screws	—		—		—		—		
	With extension bars	◉		◉		◉		◉		
Rear-connected (RC)	Flat bar studs	○		○		○		○		
Plug-in (PM) For switchboards	High-performance (PMB)	○ ㊺		○ ㊺		○ ㊺		—		
	Standard (PMC)	○	—	○	—	○	—	—		
For distribution boards (PMD)		—		—		—		—		
Flush-mounted (FP)	With flat bar studs	○		○		○		○		
Draw-out type (DR)		▲		▲		▲		—		
TemPlug70 (PG)		○	—	○	—	—		—		
DIN rail mount		—		—		—		—		
■ Accessories (optional)			**Symbol**							
Externally mounted: Motor operator		●	M C	●		●		●		
External operating handle	Breaker-mounted	●	H B	●		●		●		
	Door-mounted (variable depth)	●	H P	●		●		●		
Toggle extension		●	H A	●		●		●		
Mechanical interlock ⑨	Slide type	●	M S	●		●		●		
	Rear-connected type	—	M B	—		—		—		
	Link type	●	M L	●		●		●		
	Wire type	●	MW	●		●		●		
Toggle holder		●	H H	●		●		●		
Toggle lock			H L							
Terminal cover	For front-connected	●	C F	●		●		●		
	For rear-connected and plug-in	●	C R	●		●		●		
Terminal block for lead		●	T F	●		●		●		
Door flange		●	D F	●		●		●		
CE marking		Yes		Yes		Yes		Yes		
Colour of cover		Grey Blue		Grey Blue		Grey Blue		Grey Blue		
Trip button (Colour)		Yes (Red)		Yes (Red)		Yes (Red)		Yes (Red)		
Suitability for isolation		Yes		Yes		Yes		Yes		
Reverse connection		Yes		Yes		Yes		Yes		

Notes:

◉ : Standard. This configuration used unless otherwise specified. ○ : Optional standard. Specify when ordering.
▲ : Semi-standard. ● : "yes" or "available". — : "no" or "not available"
⑨ : Mechanical interlocks cannot be applied to draw-out type (DR).
㉙ : Please use upstream breaker for overcurrent protection. Rated conditional short-circuit current [Icc] will be the same as Rated short-circuit breaking capacity of upstream breaker.
㊺ : A safety lock function is provided.

Combinations of Internally Mounted Accessories (Optional)

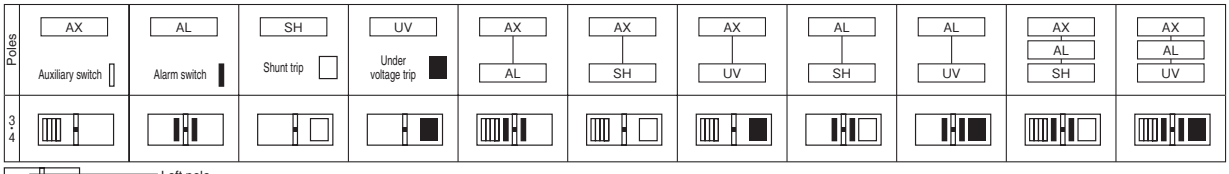

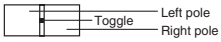

Note: For auxiliary switches or alarm switches, left-hand mounting has priority.

Outline dimensions (mm) — S630-GN, S800-NN, S1000-NN

Front-connected

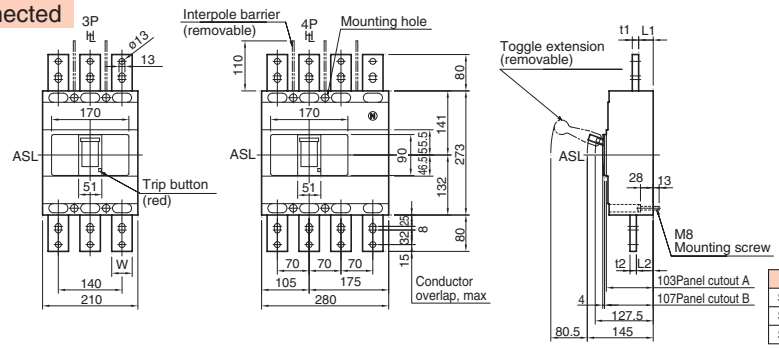

Drilling plan (front view)

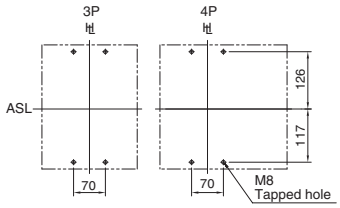

	L1	L2	t1	t2	W
S630-GN	32	34	8	8	40
S800-NN	32	35	10	10	40
S1000-NN	32	37	14	14	45

Rear-connected

Outline drawing of S630-GN and S800-NN. See S1000-CE on page 7-75 for the outline drawing of S1000-NN.

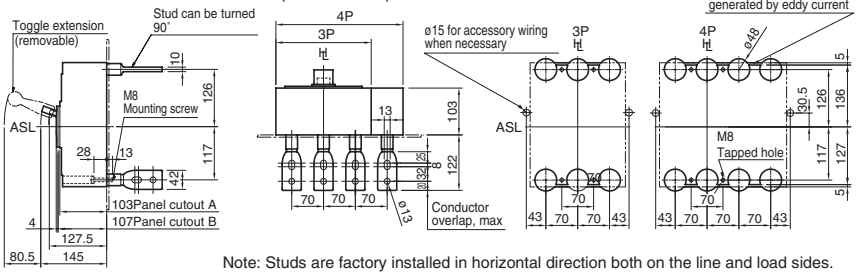

Note: Studs are factory installed in horizontal direction both on the line and load sides.

Panel cutout A (front view) Panel cutout B (front view)

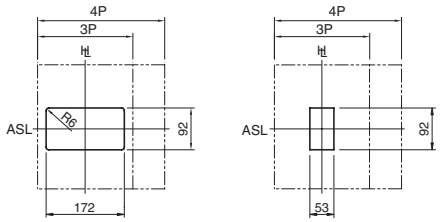

Panel cutout dimensions shown give an allowance of 1.0mm around the handle escutcheon.

Plug-in (Standard)

Outline drawing of S630-GN and S800-NN.

Detail of connecting part

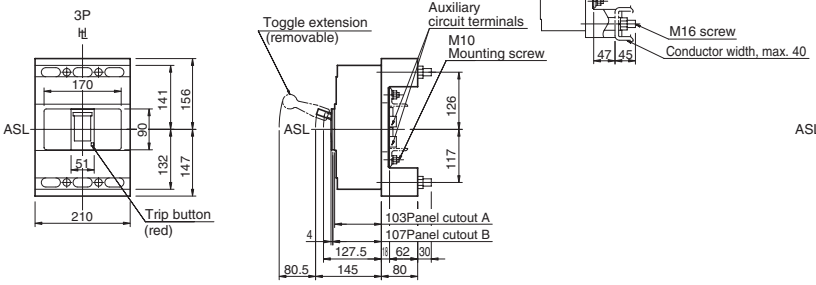

Mounting base (rear view) Drilling plan (front view)

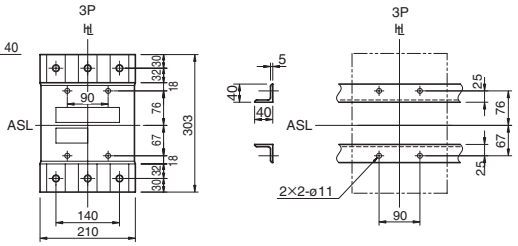

Plug-in (High-performance)

Outline drawing of S630-GN and S800-NN.

Detail of connecting part / Preparation of conductor

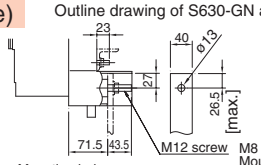

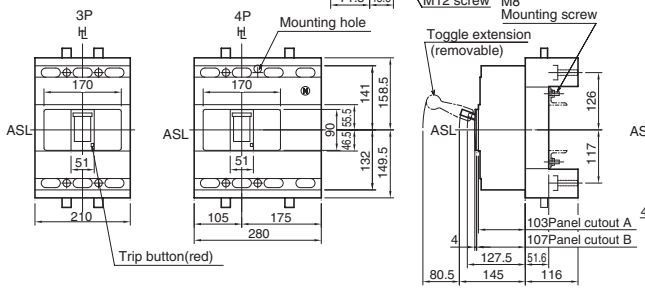

Mounting base (rear view) Drilling plan (front view)

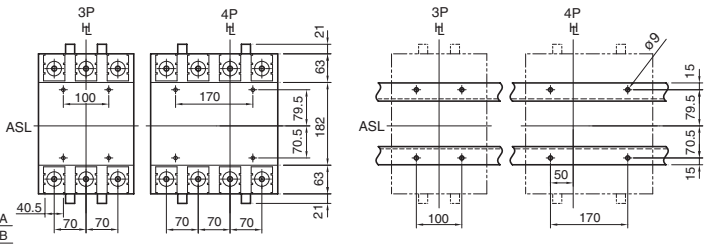

Flush-mounted

Outline drawing of S630-GN and S800-NN. See S1000-CE on page 7-75 for the outline drawing of S1000-NN.

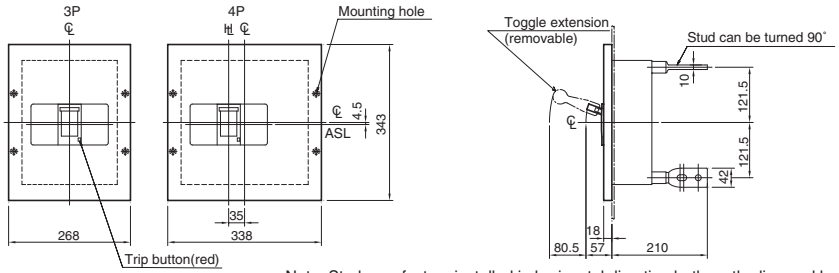

Drilling plan (front view)

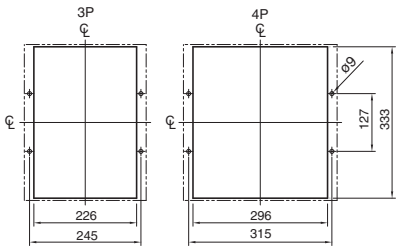

Note: Studs are factory installed in horizontal direction both on the line and load sides.

Switch-disconnectors

S1250-NN

Ratings and Specifications

Frame size (A)			1250			
Type			**S1250-NN**			
Number of poles			3	4		
■ Ratings						
Rated current, A			1250			
Rated insulation voltage〔U_i〕 V			690			
Rated operational voltage V		AC	690			
		DC	250			
Rated impulse withstand voltage〔U_{imp}〕 kV			8			
Rated short circuit making capacity〔I_{cm}〕 kA peak			32			
Rated short time withstand current〔I_{cw}〕 kA			15 (0.3sec.)			
■ Performance						
Utilization category		AC	AC-23A			
JIS C 8201-3 IEC 60947-3		DC	DC-22A			
Upstream breaker (OCPD) ㉙			**S1250-NE**			
Weight (◉ marked standard type) kg			18.2	23.4		
■ Connections and Mountings						
Front-connected (FC)	Terminal screws		—			
	With extension bars		◉			
Rear-connected (RC)	Flat bar studs		○			
Plug-in (PM) For switchboards	High-performance (PMB)		—			
	Standard (PMC)		○			
For distribution boards (PMD)			—			
lush-mounted (FP)	With flat bar studs		○			
Draw-out type (DR)			▲			
TemPlug70 (PG)			—			
DIN rail mount			—			
■ Accessories (optional)		**Symbol**				
Externally mounted: Motor operator		M C	●			
External operating handle	Breaker-mounted	H B	●			
	Door-mounted (variable depth)	H P	●			
Toggle extension		H A	● ㉔			
Mechanical interlock ⑨	Slide type	M S	●			
	Rear-connected type	M B	●			
	Link type	M L	—			
	Wire type	MW	●			
Toggle holder		H H	●			
Toggle lock		H L				
Terminal cover	For front-connected	C F	●			
	For rear-connected and plug-in	C R	—			
Terminal block for lead		T F	●			
Door flange		D F	●			
CE marking			Yes			
Colour of cover			Grey Blue			
Trip button (Colour)			Yes (Red)			
Suitability for isolation			Yes			
Reverse connection			Yes			

Notes:

◉ : Standard. This configuration used unless otherwise specified. ○ : Optional standard. Specify when ordering.
▲ : Semi-standard. ● : "yes" or "available". — : "no" or "not available"
⑨ : Mechanical interlocks cannot be applied to draw-out type (DR).
㉔ : One is supplied with every five breakers. Please specify if more are required.
㉙ : Please use upstream breaker for overcurrent protection. Rated conditional short-circuit current [Icc] will be the same as Rated short-circuit breaking capacity of upstream breaker.

Combinations of Internally Mounted Accessories (Optional)

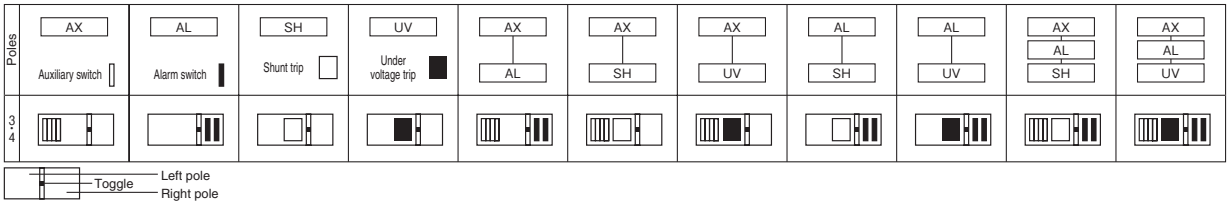

Outline dimensions (mm) S1250-NN

Front-connected

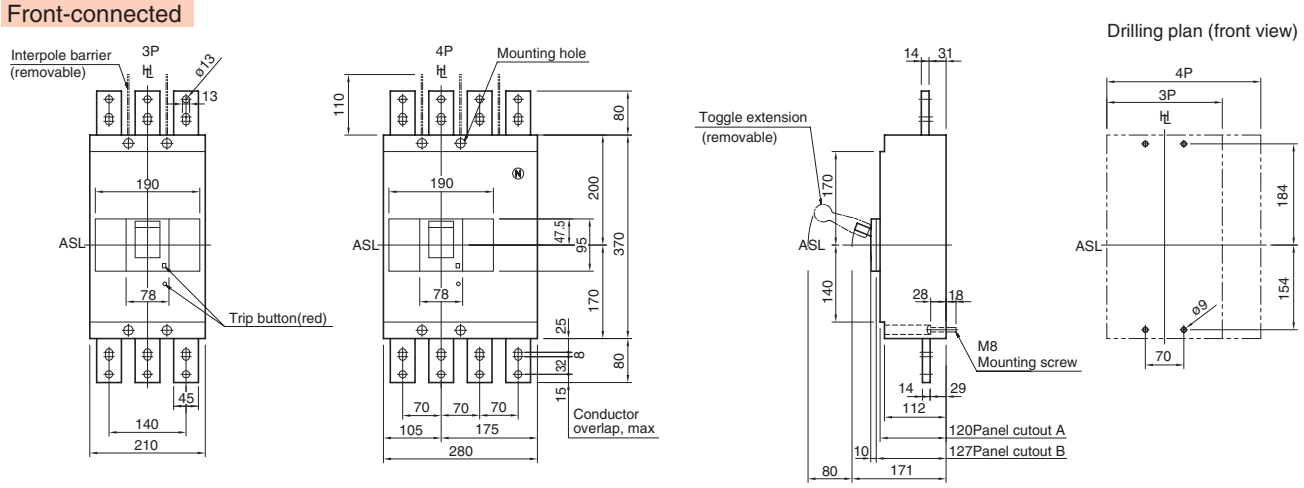

Rear-connected

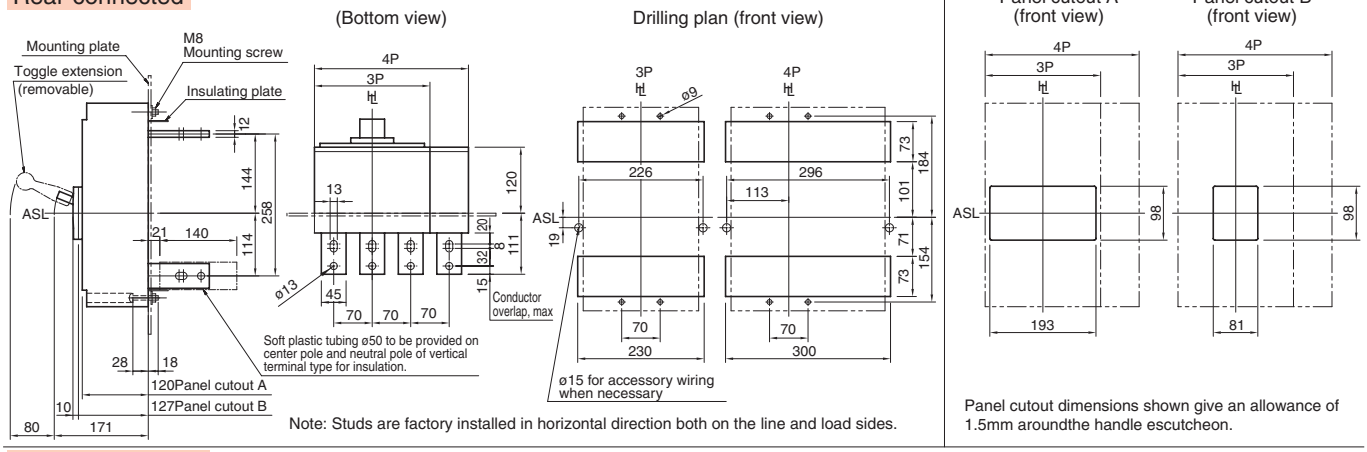

Note: Studs are factory installed in horizontal direction both on the line and load sides.

Panel cutout dimensions shown give an allowance of 1.5mm aroundthe handle escutcheon.

Plug-in (Standard)

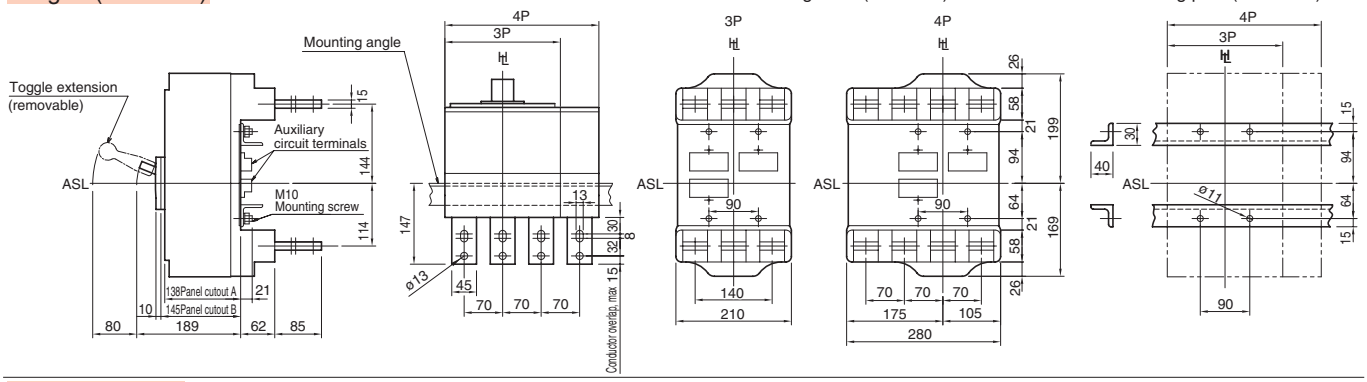

Flush-mounted

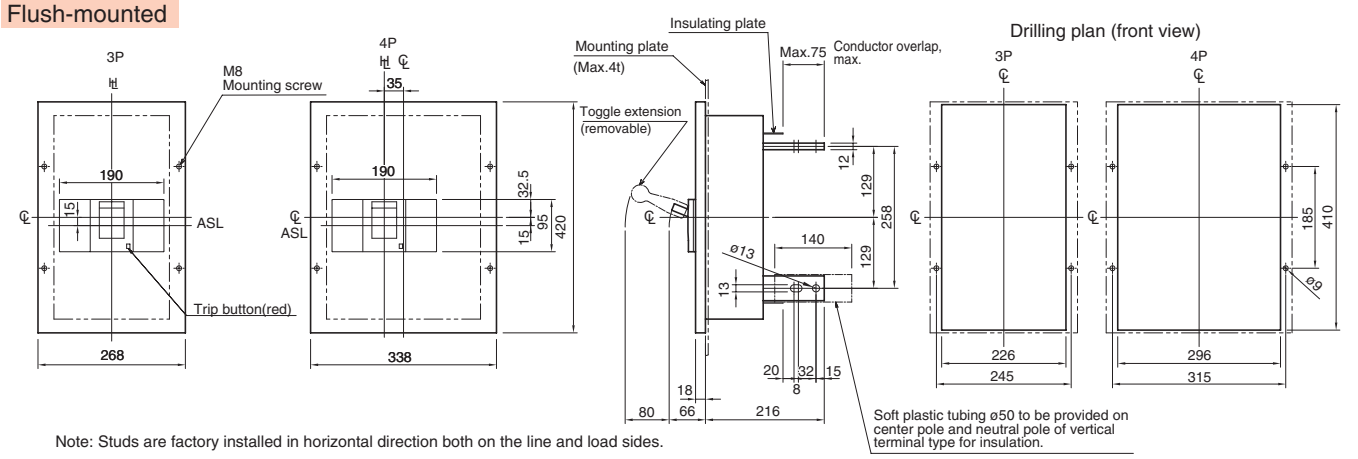

Note: Studs are factory installed in horizontal direction both on the line and load sides.

Switch-disconnectors

S1600-NN

Ratings and Specifications

Frame size (A)			1600	
Type			**S1600-NN**	
Number of poles			3	4
■ Ratings				
Rated current, A			1600	
Rated insulation voltage〔U_i〕 V			690	
Rated operational voltage V		AC	690	
		DC	250	
Rated impulse withstand voltage〔U_{imp}〕 kV			8	
Rated short circuit making capacity〔I_{cm}〕 kA peak			45	
Rated short time withstand current〔I_{cw}〕 kA			20 (0.3sec.)	
■ Performance				
Utilization category		AC	AC-23A	
JIS C 8201-3 IEC 60947-3		DC	DC-22A	
Upstream breaker (OCPD) ㉙			**S1600-NE**	
Weight (◉ marked standard type) kg			24.9	32.9
■ Connections and Mountings				
Front-connected (FC)	Terminal screws		—	
	With extension bars		○	
Rear-connected (RC)	Flat bar studs		◉	
Plug-in (PM) For switchboards	High-performance (PMB)		—	
	Standard (PMC)		—	
For distribution boards (PMD)			—	
Flush-mounted (FP)	With flat bar studs		○	
Draw-out type (DR)			○	
TemPlug70 (PG)			—	
DIN rail mount			—	
■ Accessories (optional)		**Symbol**		
Externally mounted: Motor operator		M C	●	
External operating handle	Breaker-mounted	H B	●	
	Door-mounted (variable depth)	H P	●	
Toggle extension		H A	● ㉔	
Mechanical interlock ⑨	Slide type	M S	●	
	Rear-connected type	M B	●	
	Link type	M L	—	
	Wire type	MW	●	
Toggle holder		H H	●	
Toggle lock		H L		
Terminal cover	For front-connected	C F	—	
	For rear-connected and plug-in	C R	—	
Terminal block for lead		T F	●	
Door flange		D F	●	
CE marking			Yes	
Colour of cover			Grey Blue	
Trip button (Colour)			Yes (Red)	
Suitability for isolation			Yes	
Reverse connection			Yes	

Notes:

◉ : Standard. This configuration used unless otherwise specified. ○ : Optional standard. Specify when ordering.
▲ : Semi-standard. ● : "yes" or "available". — : "no" or "not available"
⑨ : Mechanical interlocks cannot be applied to draw-out type (DR).
㉔ : One is supplied with every five breakers. Please specify if more are required.
㉙ : Please use upstream breaker for overcurrent protection. Rated conditional short-circuit current [Icc] will be the same as Rated short-circuit breaking capacity of upstream breaker.

Combinations of Internally Mounted Accessories (Optional)

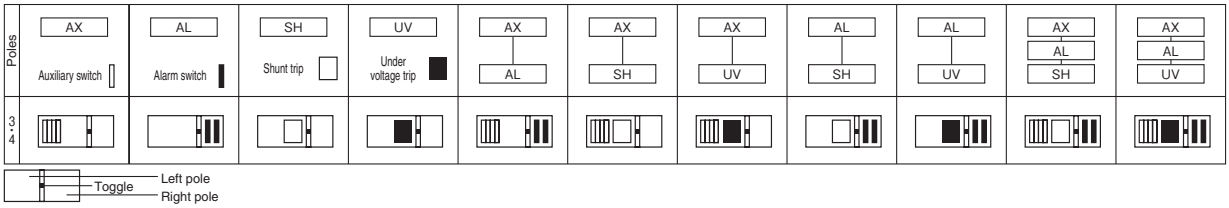

Outline dimensions (mm) S1600-NN

Front-connected

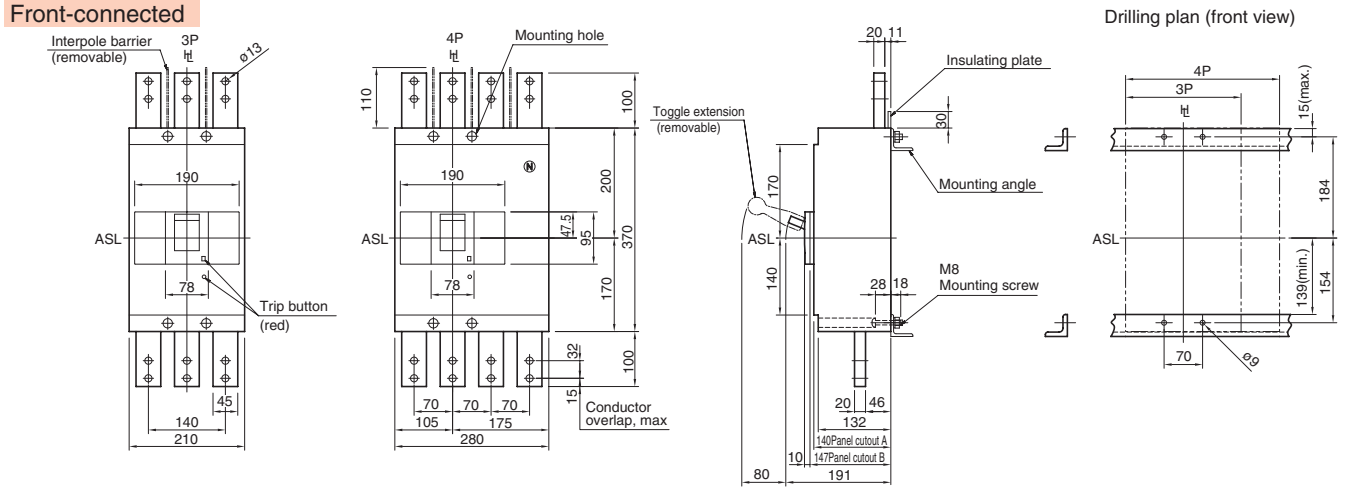

Rear-connected

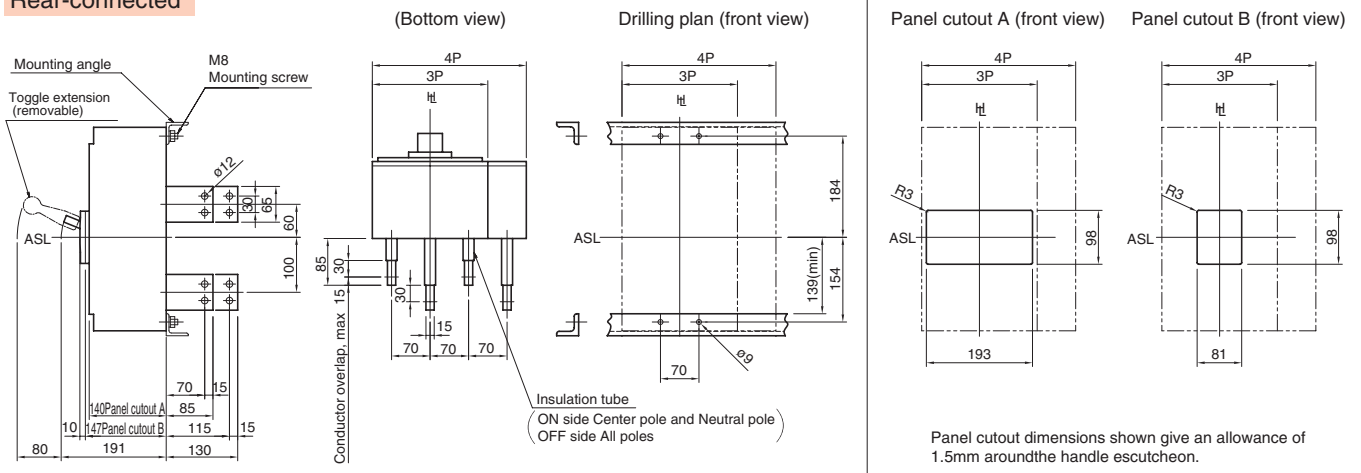

Panel cutout dimensions shown give an allowance of 1.5mm aroundthe handle escutcheon.

Draw-out

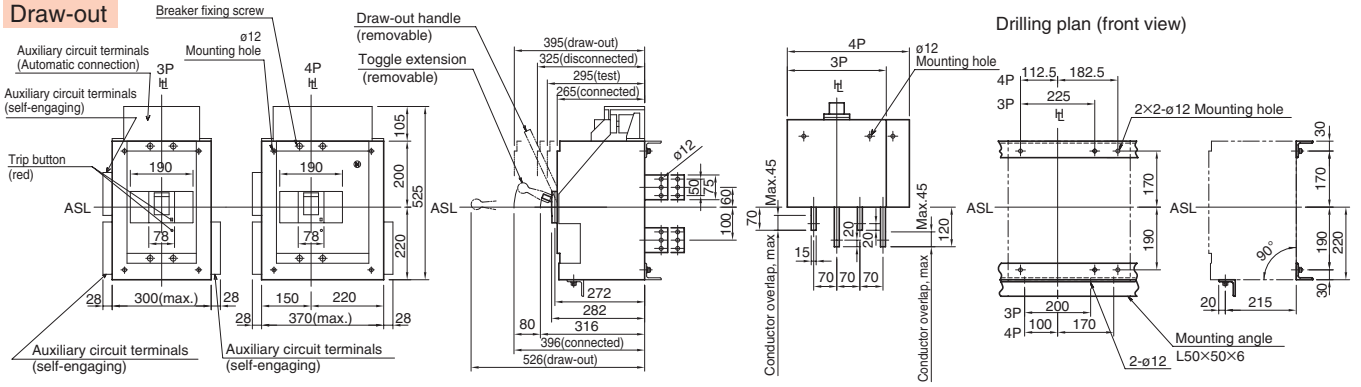

Flush-mounted

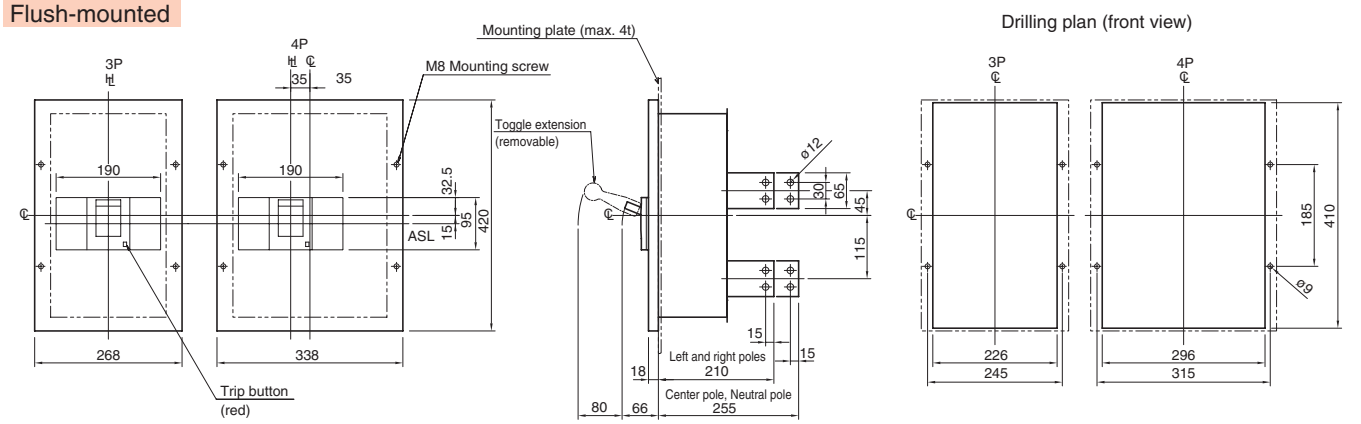

Non-automatic trip breakers

XS2000NN

Ratings and Specifications

Frame size (A)		2000				
Type		XS2000NN				
Number of poles		3	4			
■ Ratings						
Rated current, A		2000				
Rated insulation voltage〔U_i〕 V		690				
Rated operational voltage V	AC	690				
	DC	250				
Rated impulse withstand voltage〔U_{imp}〕 kV		8				
Rated short circuit making capacity〔I_{cm}〕 kA peak		90				
Rated short time withstand current〔I_{cw}〕 kA		35 (0.3sec.)				
■ Performance						
Max switching current A	AC	12000				
JIS C 8201-2-1 Ann.1 Ann.2	DC	5000				
IEC60947-2						
Ann.L CBI-Y						
Endurance Number of operating cycles with current		500				
Number of operating cycles without current		2500				
Upstream breaker (OCPD) ㉙		XS2000NE				
Weight (◉ marked standard type) kg		51.8	64.8			
■ Connections and Mountings						
Front-connected (FC) Terminal screws		—				
With extension bars		○				
Rear-connected (RC) Flat bar studs		◉				
Plug-in (PM) For switchboards High-performance (PMB)		—				
Standard (PMC)		—				
For distribution boards (PMD)		—				
Flush-mounted (FP) With flat bar studs		○				
Draw-out type (DR)		○				
TemPlug70 (PG)		—				
DIN rail mount		—				
■ Accessories (optional)	Symbol					
Externally mounted: Toggle extension	H A	● ②				
Mechanical interlock ⑨: Rear-connected type	M B	●				
Link type	M L	—				
Wire type	MW	—				
Terminal cover: For front-connected	C F	—				
For rear-connected and plug-in	C R	—				
Terminal block for lead	T F	●				
Door flange	D F	●				
CE marking		Non				
Colour of cover		Grey Blue				
Trip button (Colour)		Yes (Red)				
Suitability for isolation		Yes				
Reverse connection		Yes				

Notes:

◉ : Standard. This configuration used unless otherwise specified. ○ : Optional standard. Specify when ordering.

● : "yes" or "available". — : "no" or "not available"

② : Supplied as standard.

⑨ : Mechanical interlocks cannot be applied to draw-out type (DR).

㉙ : Please use upstream breaker for overcurrent protection. Rated conditional short-circuit current [Icc] will be the same as Rated short-circuit breaking capacity of upstream breaker.

㊻ : Fixed depth, not adjustable.

Combinations of Internally Mounted Accessories (Optional)

Poles	AX Auxiliary switch	AL Alarm switch	SH With shunt trip anti-burn switch	UV Under voltage trip	AX–AL	AX–SH	AX–UV	AL–SH	AL–UV	AX–AL–SH	AX–AL–UV
3-4											

Toggle — Left pole / Right pole

Note: With AC UVT, the UVT controller is externally mounted. See page 6-25.

Outline dimensions (mm) XS2000NN

Front-connected

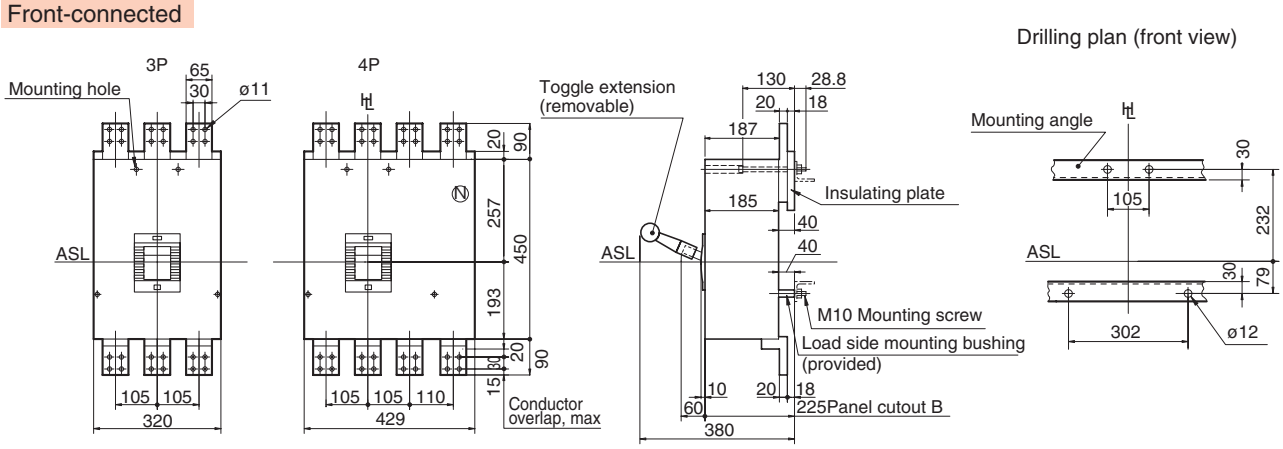

Rear-connected

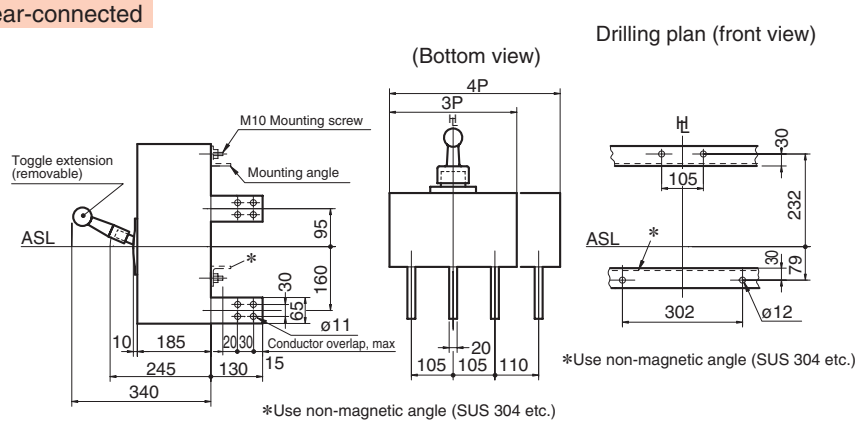

Panel cutout B (front view)

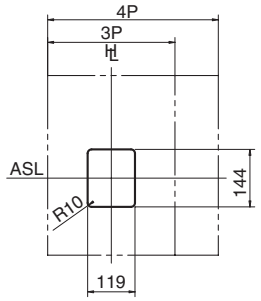

Panel cutout dimensions shown give an allowance of 2mm aroundthe handle escutcheon.

Draw-out

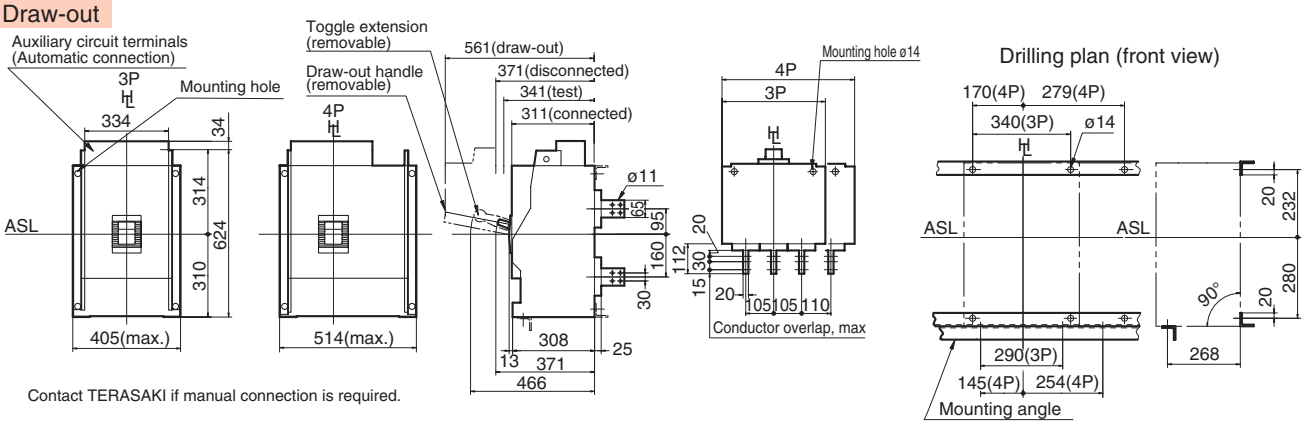

Flush-mounted

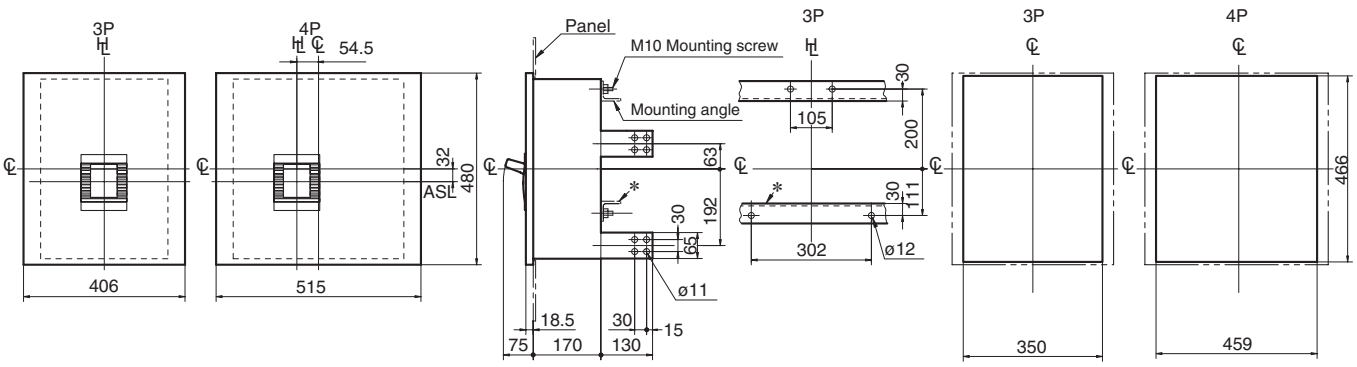

Non-automatic trip breakers

XS2500NN, XS3200NN

Ratings and Specifications

Frame size (A)			2500		3200	
Type			XS2500NN		XS3200NN	
Number of poles			3	4	3	
■ Ratings						
Rated current, A			2500		3200	
Rated insulation voltage〔U_i〕 V			690		690	
Rated operational voltage V		AC	690		690	
		DC	250		250	
Rated impulse withstand voltage〔U_{imp}〕 kV			8		8	
Rated short circuit making capacity〔I_{cm}〕 kA peak			90		90	
Rated short time withstand current〔I_{cw}〕 kA			35 (0.3sec.)		38 (0.5sec.)	
■ Performance						
Max switching current A		AC	15000		15000	
JIS C 8201-2-1 Ann.1 Ann.2		DC	6250		6250	
IEC60947-2						
Ann.L CBI-Y						
Endurance	Number of operating cycles with current		500		500	
	Number of operating cycles without current		2500		1500	
Upstream breaker (OCPD) ㉙			XS2500NE		XS3200NE	
Weight (◉ marked standard type) kg			60	75.7	60	
■ Connections and Mountings						
Front-connected (FC)	Terminal screws		—		—	
	With extension bars		—		—	
Rear-connected (RC)	Flat bar studs		◉		◉	
Plug-in (PM) For switchboards	High-performance (PMB)		—		—	
	Standard (PMC)		—		—	
For distribution boards (PMD)			—		—	
Flush-mounted (FP)	With flat bar studs		○		○	
Draw-out type (DR)			—		—	
TemPlug70 (PG)			—		—	
DIN rail mount			—		—	
■ Accessories (optional)		Symbol				
Externally mounted: Toggle extension		H A	● ②		● ②	
Mechanical interlock	Rear-connected type	M B	●		●	
	Link type	M L	—		—	
	Wire type	MW	—		—	
Terminal cover	For front-connected	C F	—		—	
	For rear-connected and plug-in	C R	—		—	
Terminal block for lead		T F	●		●	
Door flange		D F	●		●	
CE marking			Non		Non	
Colour of cover			Grey Blue		Grey Blue	
Trip button (Colour)			Yes (Red)		Yes (Red)	
Suitability for isolation			Yes		Yes	
Reverse connection			Yes		Yes	

Notes:

◉ : Standard. This configuration used unless otherwise specified. ○ : Optional standard. Specify when ordering.

● : "yes" or "available". — : "no" or "not available"

② : Supplied as standard.

㉙ : Please use upstream breaker for overcurrent protection. Rated conditional short-circuit current [Icc] will be the same as Rated short-circuit breaking capacity of upstream breaker.

㊻ : Fixed depth, not adjustable.

Combinations of Internally Mounted Accessories (Optional)

Poles	AX	AL	SH	UV	AX–AL	AX–SH	AX–UV	AL–SH	AL–UV	AX–AL–SH	AX–AL–UV
	Auxiliary switch	Alarm switch	With shunt trip anti-burn switch	Under voltage trip							
3·4											

Toggle — Left pole / Right pole

Note: With AC UVT, the UVT controller is externally mounted. See page 6-25.

Outline dimensions (mm) XS2500NN, XS3200NN

Rear-connected

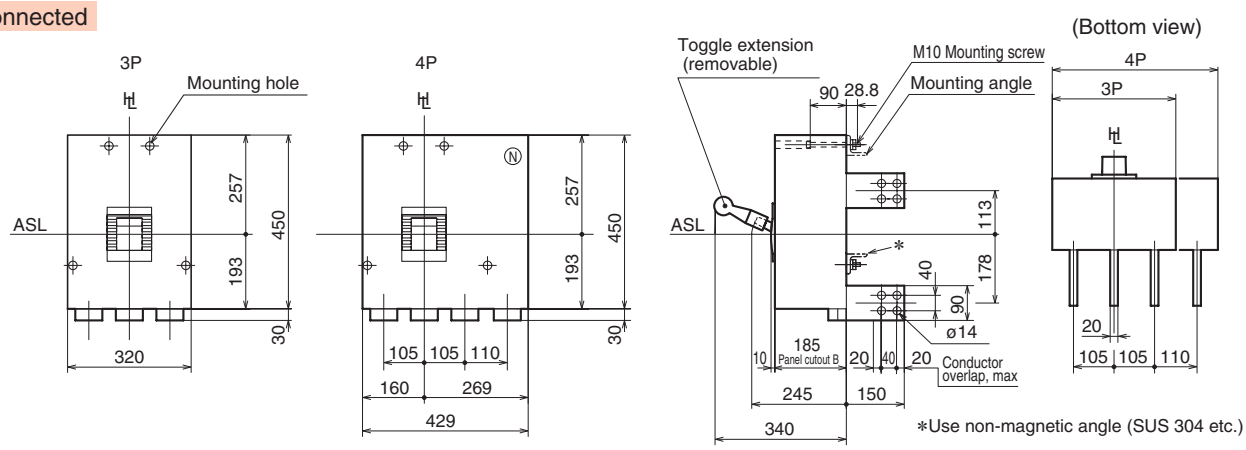

Panel cutout B (front view)

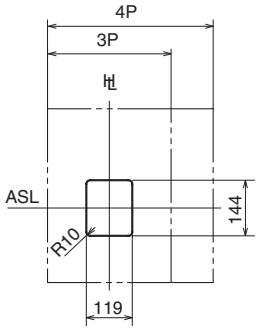

Drilling plan (front view)

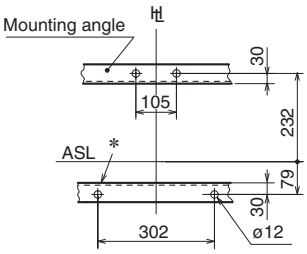

*Use non-magnetic angle (SUS 304 etc.)

Panel cutout dimensions shown give an allowance of 2mm aroundthe handle escutcheon.

Flush-mounted

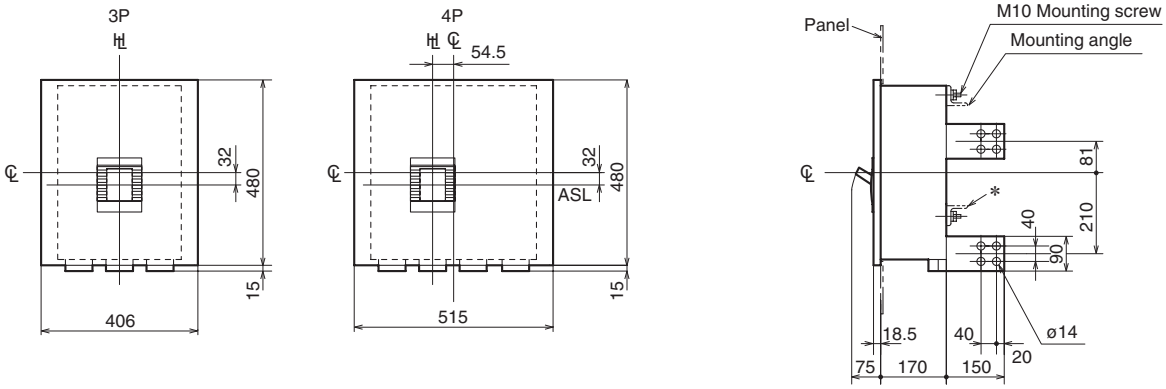

Panel cutout (front view)

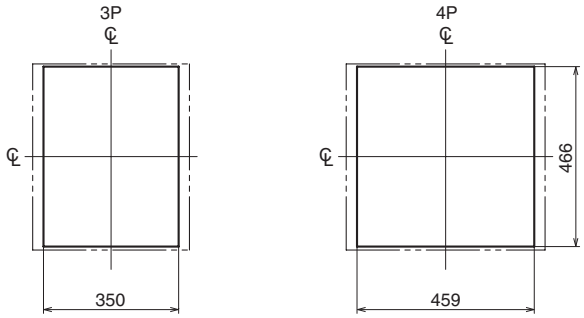

Drilling plan (front view)

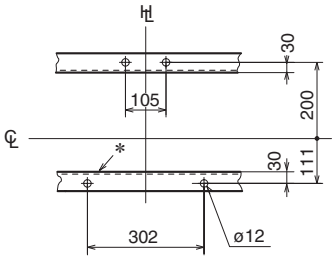

*Use non-magnetic angle (SUS 304 etc.)

Remark: XS3200NN is only available with 3 poles.

7 Characteristics and Outline Dimensions TemBreak PRO

Circuit Breaker with earth leakage alarm

PE50-NFZ, PS50-NFZ, PE125-NFZ

Ratings and Specifications

Frame size (A)		50	50	100	125
Type		PE50-NFZ	PS50-NFZ	PE125-NFZ	
Number of poles ⑭⑮		3	3	3	3
■ Ratings					
Rated current, A		15	15	60	125
Calibrated at 40°C		20	20	75	
		30	30	100	
		40	40		
		50	50		
Rated operational voltage V		100-440 common	100-440 common	100-440 common	100-440 common
Applicable range V		80 – 484	80 – 484	80 – 484	80 – 484
Rated impulse withstand voltage〔U_{imp}〕 kV		6	6	6	6
■ Rated breaking capacity, kA					
JIS C 8201-2-1 Ann.2 AC	440V	2.5	7.5	10	10
I_{cu}(sym)	415V	2.5	7.5	10	10
	240V	7.5	15	30	30
■ Earth leakage alarm specifications					
Earth leakage detection (Current operation type)		Electronic	Electronic	Electronic	Electronic
Rated sensitivity current mA		30/100/500 selectable	30/100/500 selectable	30/100/500 selectable	30/100/500 selectable
Max. operating time sec		0.1/0.45/1.0 selectable	0.1/0.45/1.0 selectable	0.1/0.45/1.0 selectable	0.1/0.45/1.0 selectable
Earth leakage alarm output contact configuration ㉚		1c	1c	1c	1c
Alarm reset function (manual reset) ㊴		Push button	Push button	Push button	Push button
Weight (◉ marked standard type) kg		0.8	0.8	0.9	0.9
■ Connections and Mountings					
Front-connected (FC) Terminal screws		◉ ㊺	◉ ㊺	◉	◉
With extension bars		○ ㊸	○ ㊸	○ ㊸	○ ㊸
Rear-connected (RC) Flat bar studs		○	○	○	○
Plug-in (PM) For switchboards High-performance (PMB)		—	—	—	—
Standard (PMC)		—	—	—	—
For distribution boards (PMD)		—	—	—	—
Flush-mounted (FP) With flat bar studs		○	○	○	○
Draw-out type (DR)		—	—	—	—
TemPlug70 (PG)		—	—	—	—
DIN rail mount		○ ⑪	○ ⑪	○ ⑪	○ ⑪
■ Accessories (optional)	Symbol				
Externally mounted: Motor operator	M C	—	—	—	—
External operating handle: Breaker-mounted	H B	●	●	●	●
External operating handle: Door-mounted (variable depth)	H P	●	●	●	●
Toggle extension	H A	—	—	—	—
Mechanical interlock: Slide type	M S	●	●	●	●
Mechanical interlock: Rear-connected type	M B	—	—	—	—
Mechanical interlock: Link type	M L	—	—	—	—
Mechanical interlock: Wire type	M W	—	—	—	—
Toggle holder	H H	●	●	●	●
Toggle lock	H L	●	●	●	●
Terminal cover: For front-connected	C F	●	●	●	●
Terminal cover: For rear-connected and plug-in	C R	●	●	●	●
Terminal block for lead	T F	●	●	●	●
Door flange	D F	—	—	—	—
CE marking		Non	Non	Non	Non
Overcurrent trip mechanism		Thermal-magnetic	Thermal-magnetic	Thermal-magnetic	Thermal-magnetic
Earth leakage indication		LED (Red)	LED (Red)	LED (Red)	LED (Red)
Colour of cover		Grey Blue	Grey Blue	Grey Blue	Grey Blue
Trip button (Colour)		Yes (Red)	Yes (Red)	Yes (Red)	Yes (Red)
Suitability for isolation		Yes	Yes	Yes	Yes
Reverse connection		Non	Non	Non	Non

Notes:

◉ : Standard. This configuration used unless otherwise specified.
○ : Optional standard. Specify when ordering. ● : "yes" or "available". — : "no" or "not available".
⑪ : Please order the DIN rail adapter separately. See page 6-152.
⑭ : When applying 3-pole type to a 1ø2W circuit, use both ends and do not use the central pole.
⑮ : When applying 3-pole type to a 1ø3W circuit, apply voltage to both ends and connect the neutral wire to the central pole.
㉚ : See page 6-22 for the contact rating.
㊴ : An earth leakage alarm maintains the operating state until pressing the reset button or turning the main circuit power OFF. If the electric leakage continues, it will be reset while you hold down the reset button, but when you release the reset button, it will return to the operating state.
㊺ : A wire clamping terminal is provided. ㊸ : For the extension bars, please place the order separately in parts.

Time/Current characteristic curves

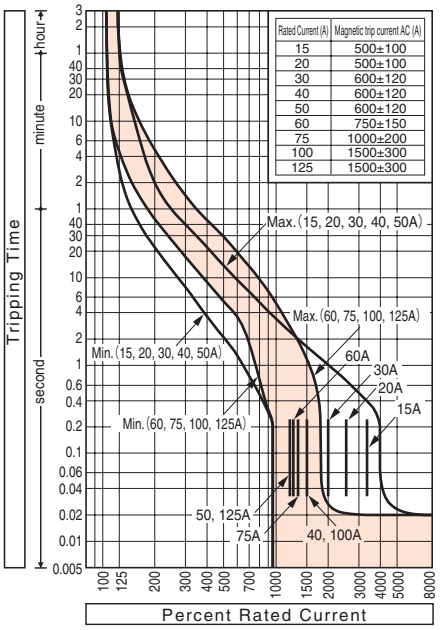

Ambient Compensating Curves

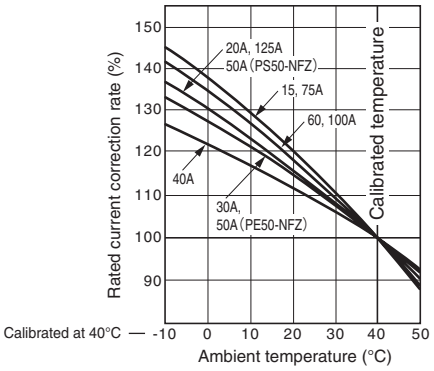

Combinations of Internally Mounted Accessories (Optional)

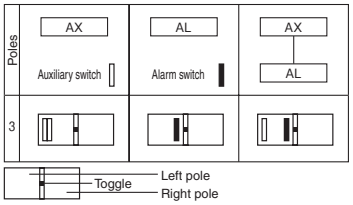

Outline dimensions (mm)

PE50-NFZ, PS50-NFZ, PE125-NFZ

Front-connected

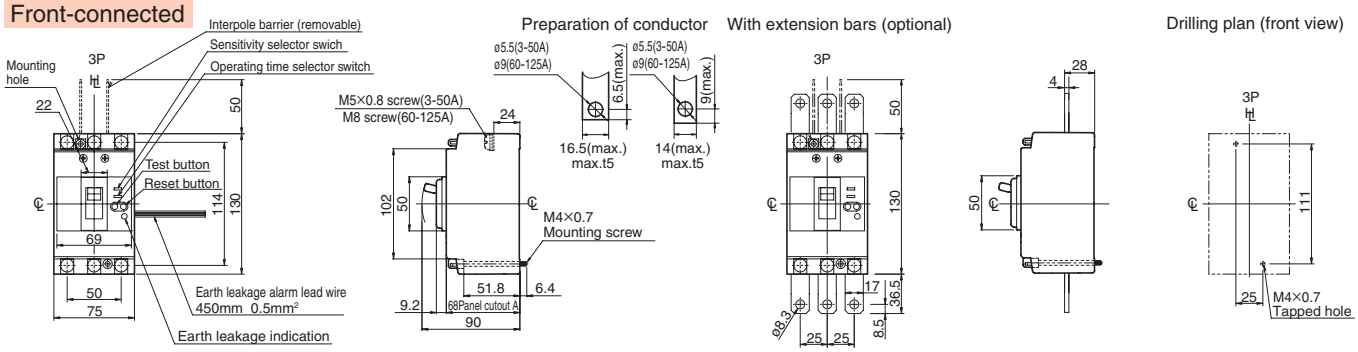

Rear-connected (For leakage alarm lead wires, see the front-connected type)

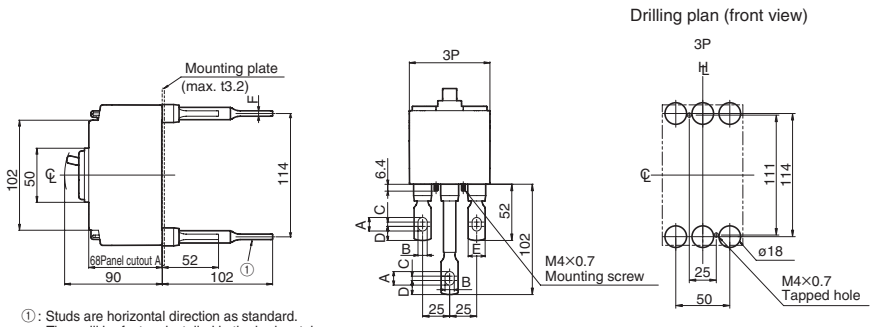

① : Studs are horizontal direction as standard. They will be factory installed in the horizontal direction unless otherwise specified. Vertical position is a special specification. Please specify this when ordering.

Note) If you will arrange the studs vertically, please insulate them carefully with insulating tubes, insulating tape, or similar because the insulation distance between the studs is insufficient.

Detail of connecting part

Rated current (A)	A	B	C	D	E	F
3-50	10.5	6.5	4	13	16	4
60-125	12.5	8.5	4	13	16	5

Panel cutout A (front view)

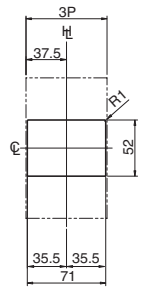

Panel cutout dimensions shown give an allowance of 1.0mm around the handle escutcheon.

Flush-mounted (For leakage alarm lead wires, see the front-connected type)

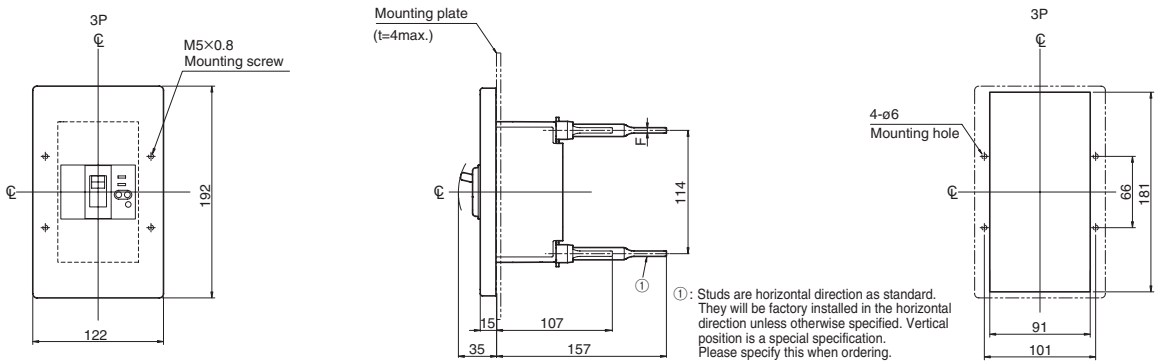

① : Studs are horizontal direction as standard. They will be factory installed in the horizontal direction unless otherwise specified. Vertical position is a special specification. Please specify this when ordering.

Rated current (A)	A	B	C	D	E	F
3-50	10.5	6.5	4	13	16	4
60-125	12.5	8.5	4	13	16	5

Note) If you will arrange the studs vertically, please insulate them carefully with insulating tubes, insulating tape, or similar because the insulation distance between the studs is insufficient.

Please check the rear connected type for a detailed outline drawing of the terminals.

Earth leakage trip characteristic

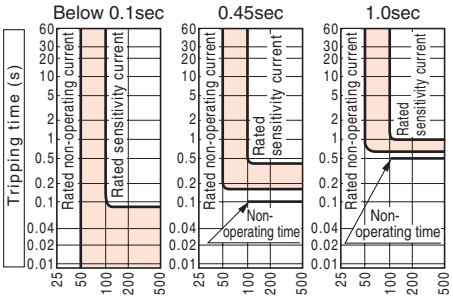

Time delay tripping type will operate on 0.15-0.45sec for 0.45sec, 0.6-1.0sec for 1.0sec.

Control circuit

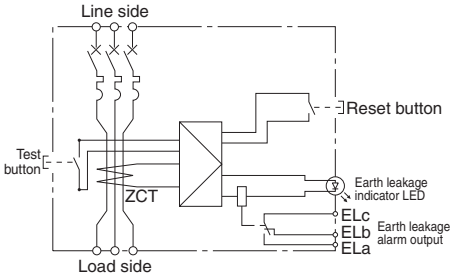

7 Characteristics and Outline Dimensions TemBreak PRO

Circuit Breaker with earth leakage alarm

ZAS125-SF

Ratings and Specifications

Frame size (A)		100	125	
Type		ZAS125-SF		
Number of poles ⑭⑮		3	3	
■ Ratings				
Rated current, A		15 50	125	
Calibrated at 40°C		20 60		
		30 75		
		40 100		
Rated operational voltage V		100-440 common	100-440 common	
Applicable range V		80 – 484	80 – 484	
Rated impulse withstand voltage〔U_{imp}〕 kV		8	8	
■ Rated breaking capacity, kA				
JIS C 8201-2-1 Ann.2	AC 440V	25	25	
I_{cu}(sym)	415V	30	30	
	240V	50	50	
■ Earth leakage alarm specifications				
Earth leakage detection (Current operation type)		Electronic	Electronic	
Rated sensitivity current mA		100/200/500 selectable	100/200/500 selectable	
Max. operating time sec		0.1/0.45/1.0 selectable	0.1/0.45/1.0 selectable	
Earth leakage alarm output contact configuration ㉚		1c	1c	
Alarm reset function (manual reset) ㊴		Push button ⑧	Push button ⑧	
Weight (◉ marked standard type) kg		0.95	0.95	
■ Connections and Mountings				
Front-connected (FC)	Terminal screws	◉ ④	◉	
	With extension bars	○ ㊸	○ ㊸	
Rear-connected (RC)	Flat bar studs	○	○	
Plug-in (PM) For switchboards	High-performance (PMB)	—	—	
	Standard (PMC)	—	—	
For distribution boards (PMD)		—	—	
Flush-mounted (FP)	With flat bar studs	○	○	
Draw-out type (DR)		—	—	
TemPlug70 (PG)		○	○	
DIN rail mount		○ ⑪	○ ⑪	
■ Accessories (optional)		Symbol		
Externally mounted: Motor operator		M C	—	—
External operating handle: Breaker-mounted		H B	●	●
External operating handle: Door-mounted (variable depth)		H P	●	●
Toggle extension		H A	—	—
Mechanical interlock: Slide type		M S	●	●
Mechanical interlock: Rear-connected type		M B	—	—
Mechanical interlock: Link type		M L	—	—
Mechanical interlock: Wire type		MW	—	—
Toggle holder		H H	●	●
Toggle lock		H L	●	●
Terminal cover: For front-connected		C F	●	●
Terminal cover: For rear-connected and plug-in		C R	●	●
Terminal block for lead		T F	●	●
Door flange		D F	—	—
CE marking			Non	Non
Overcurrent trip mechanism			Thermal-magnetic	Thermal-magnetic
Earth leakage indication			LED (Red)	LED (Red)
Colour of cover			Grey Blue	Grey Blue
Trip button (Colour)			Yes (Red)	Yes (Red)
Suitability for isolation			Yes	Yes
Reverse connection			Yes ㉒	Yes ㉒

Notes:

◉ : Standard. This configuration used unless otherwise specified.
○ : Optional standard. Specify when ordering. ● : "yes" or "available". — : "no" or "not available".
④ : 50A or less is the M5 wire clamping terminal. ⑧ : Optional remote reset or automatic reset available on request. Please apply this when the reset button cannot be pressed due to the installation of external accessories, etc. See page 6-27 for details. ⑪ : Please order the DIN rail adapter separately. See page 6-152. ⑭ : When applying 3-pole type to a 1ø2W circuit, use both ends and do not use the central pole. ⑮ : When applying 3-pole type to a 1ø3W circuit, apply voltage to both ends and connect the neutral wire to the central pole. ㉚ : See page 6-22 for the contact rating. ㊴ : An earth leakage alarm maintains the operating state until pressing the reset button or turning the main circuit power OFF. If the electric leakage continues, it will be reset while you hold down the reset button, but when you release the reset button, it will return to the operating state. ㊸ : For the extension bars, please place the order separately in parts. ㉒ : There are some limitations. See page 5-23 for details.

Time/Current characteristic curves

15-50A

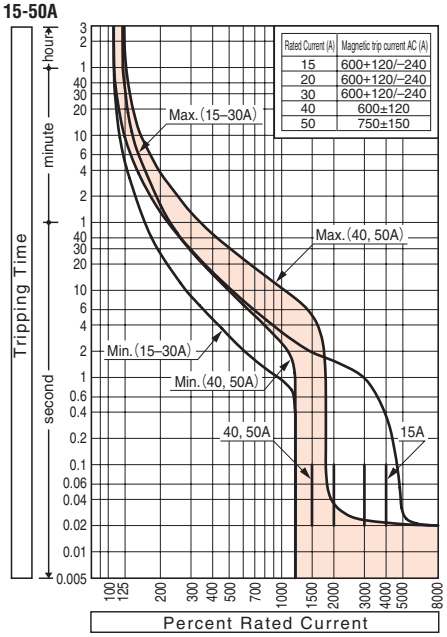

60-125A

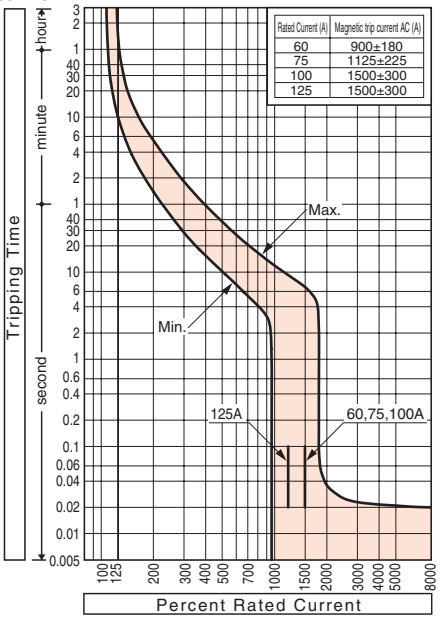

Ambient Compensating Curves

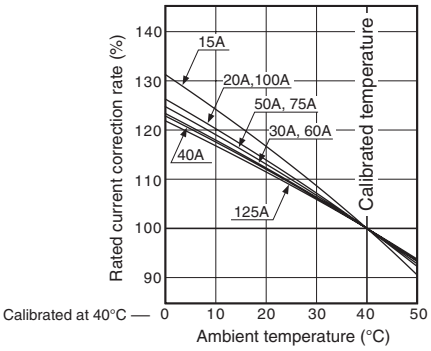

Combinations of Internally Mounted Accessories (Optional)

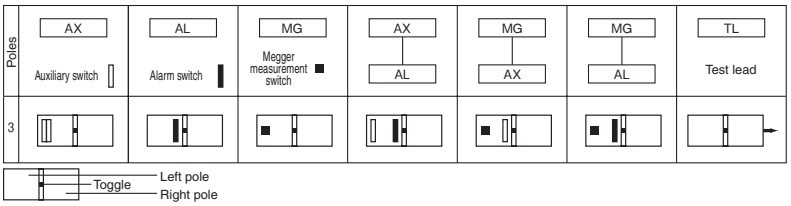

Outline dimensions (mm) ZAS125-SF

Front-connected

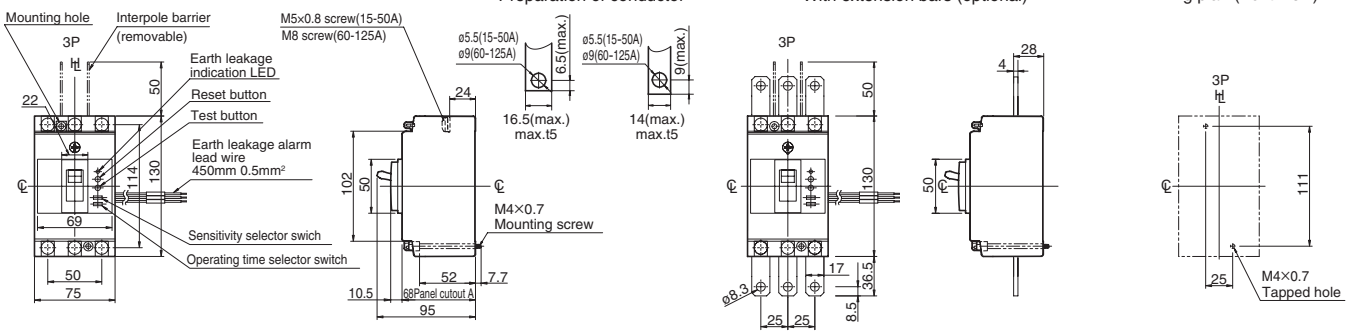

Rear-connected (For leakage alarm lead wires, see the front-connected type)

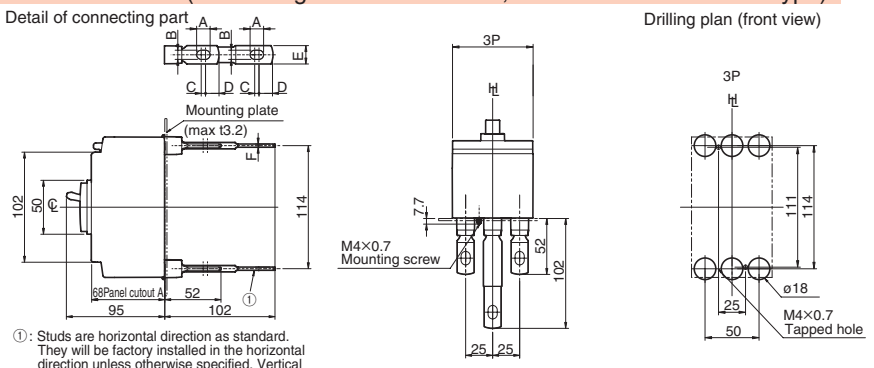

①: Studs are horizontal direction as standard. They will be factory installed in the horizontal direction unless otherwise specified. Vertical position is a special specification. Please specify this when ordering.

Note) If you will arrange the studs vertically, please insulate them carefully with insulating tubes, insulating tape, or similar because the insulation distance between the studs is insufficient.

Rated current (A)	A	B	C	D	E	F
15-50	10.5	6.5	4	13	16	4
60-125	12.5	8.5	4	13	16	5

Panel cutout A (front view)

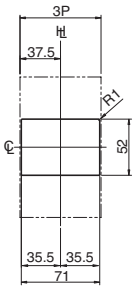

Panel cutout dimensions shown give an allowance of 1.0mm around the handle escutcheon.

Flush-mounted (For leakage alarm lead wires, see the front-connected type)

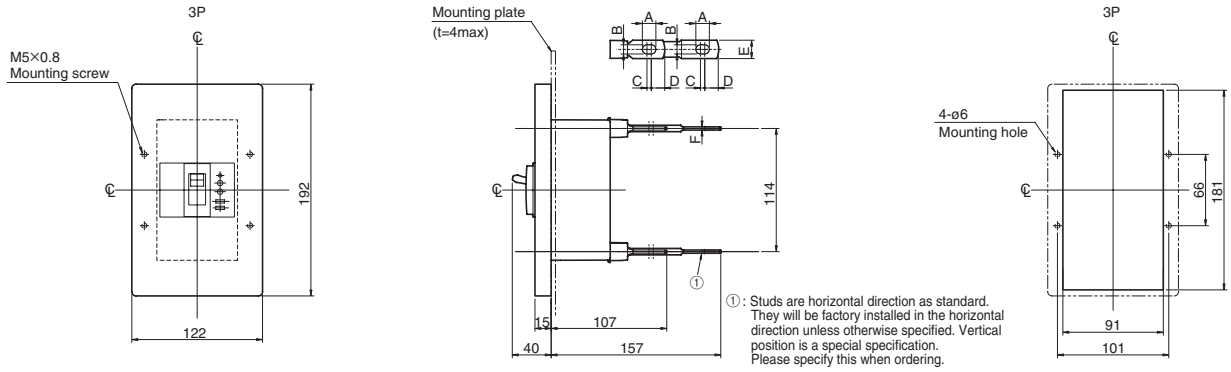

①: Studs are horizontal direction as standard. They will be factory installed in the horizontal direction unless otherwise specified. Vertical position is a special specification. Please specify this when ordering.

Rated current (A)	A	B	C	D	E	F
15-50	10.5	6.5	4	13	16	4
60-125	12.5	8.5	4	13	16	5

Note) If you will arrange the studs vertically, please insulate them carefully with insulating tubes, insulating tape, or similar because the insulation distance between the studs is insufficient.

Earth leakage trip characteristic

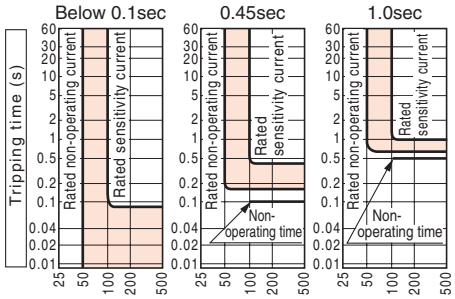

Time delay tripping type will operate on 0.15-0.45sec for 0.45sec, 0.6-1.0sec for 1.0sec.

Control circuit

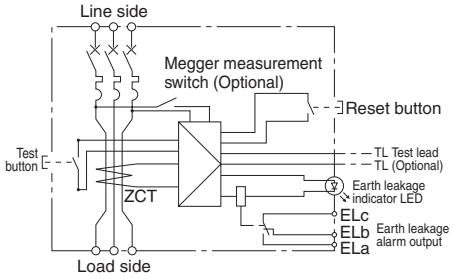

7 Characteristics and Outline Dimensions

TemBreak PRO

Circuit Breaker with earth leakage alarm

ZAS50-GF, ZAS100-GF

Ratings and Specifications

Frame size (A)			50		100			
Type			ZAS50-GF		ZAS100-GF			
Number of poles ⑭⑮			3	4	3	4		
■ Ratings								
Rated current, A			15	50	15	50		
Calibrated at 40°C			20		20	60		
			30		30	75		
			40		40	100		
Rated operational voltage V			100-440 common		100-440 common			
Applicable range V			80 – 484		80 – 484			
Rated impulse withstand voltage〔U_{imp}〕 kV			8		8			
■ Rated breaking capacity, kA								
JIS C 8201-2-1 Ann.2	AC	440V	50		50			
I_{cu}(sym)		415V	65		65			
		240V	85		85			
■ Earth leakage alarm specifications								
Earth leakage detection (Current operation type)			Electronic		Electronic			
Rated sensitivity current mA			100/200/500 selectable		100/200/500 selectable			
Max. operating time sec			0.1/0.45/1.0 selectable		0.1/0.45/1.0 selectable			
Earth leakage alarm output contact configuration ㉚			1c		1c			
Alarm reset function (manual reset) ㊴			Push button ⑧		Push button ⑧			
Weight (◉ marked standard type) kg			1.3	1.7	1.3	1.7		
■ Connections and Mountings								
Front-connected (FC)	Terminal screws		◉		◉			
	With extension bars		○ ㊸		○ ㊸			
Rear-connected (RC)	Flat bar studs		○		○			
Plug-in (PM) For switchboards	High-performance (PMB)		—		—			
	Standard (PMC)		—		—			
For distribution boards (PMD)			—		—			
lush-mounted (FP)	With flat bar studs		○		○			
Draw-out type (DR)			—		—			
TemPlug70 (PG)			○	—	○	—		
DIN rail mount			○ ⑪		○ ⑪			
■ Accessories (optional)				Symbol				
Externally mounted: Motor operator				M C	●			
External operating handle	Breaker-mounted			H B	●			
	Door-mounted (variable depth)			H P	●			
Toggle extension				H A	—			
Mechanical interlock	Slide type			M S	●			
	Rear-connected type			M B	—			
	Link type			M L	—			
	Wire type			MW	—			
Toggle holder				H H	●			
Toggle lock				H L	●			
Terminal cover	For front-connected			C F	●			
	For rear-connected and plug-in			C R	●			
Terminal block for lead				T F	●			
Door flange				D F	—			
CE marking					Non			
Overcurrent trip mechanism					Thermal-magnetic			
Earth leakage indication					LED (Red)			
Colour of cover					Grey Blue			
Trip button (Colour)					Yes (Red)			
Suitability for isolation					Yes			
Reverse connection					Yes			

Notes:

◉ : Standard. This configuration used unless otherwise specified.

○ : Optional standard. Specify when ordering. ● : "yes" or "available". — : "no" or "not available".

⑧ : Optional remote reset or automatic reset available on request. Please apply this when the reset button cannot be pressed due to the installation of external accessories, etc. See page 6-27 for details. ⑪ : Please order the DIN rail adapter separately. See page 6-152. ⑭ : When applying 3-pole type to a 1ø2W circuit, use both ends and do not use the central pole. ⑮ : When applying 3-pole type to a 1ø3W circuit, apply voltage to both ends and connect the neutral wire to the central pole. ㉚ : See page 6-22 for the contact rating. ㊴ : An earth leakage alarm maintains the operating state until pressing the reset button or turning the main circuit power OFF. If the electric leakage continues, it will be reset while you hold down the reset button, but when you release the reset button, it will return to the operating state. ㊸ : For the extension bars, please place the order separately in parts.

Remark: The rated sensitivity current is set to 100mA and the time delay tripping type's operating time is set to 0.45 seconds before delivery.

Time/Current characteristic curves

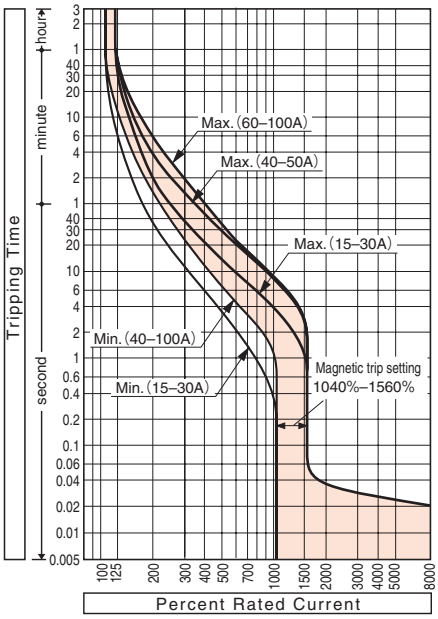

Ambient Compensating Curves

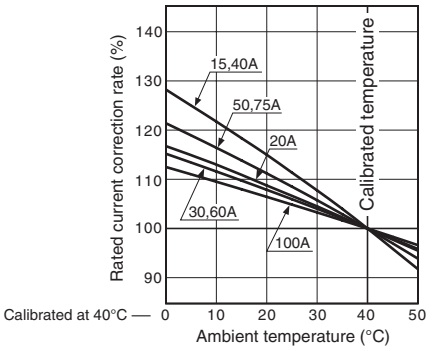

Earth leakage trip characteristic

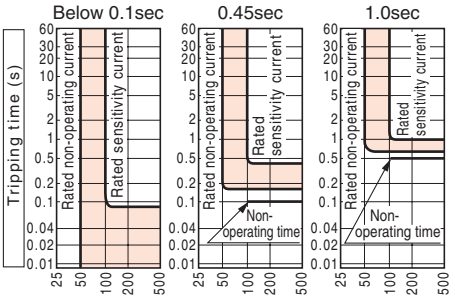

Time delay tripping type will operate on 0.15-0.45sec for 0.45sec, 0.6-1.0sec for 1.0sec.

Combinations of Internally Mounted Accessories (Optional)

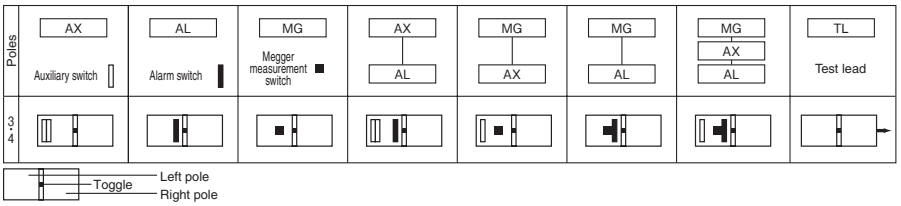

Outline dimensions (mm) — ZAS50-GF, ZAS100-GF

Front-connected

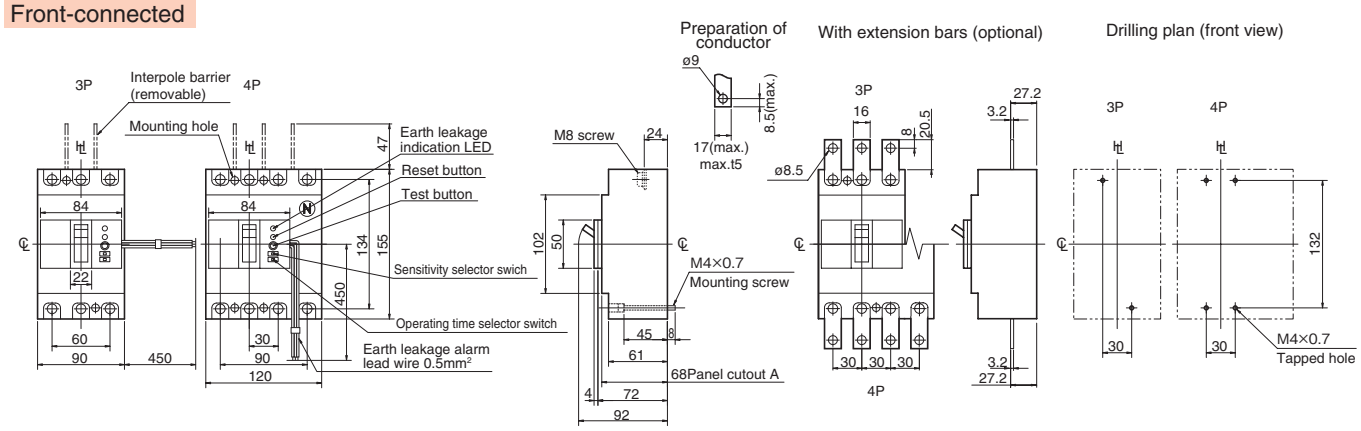

Rear-connected (For leakage alarm lead wires, see the front-connected type)

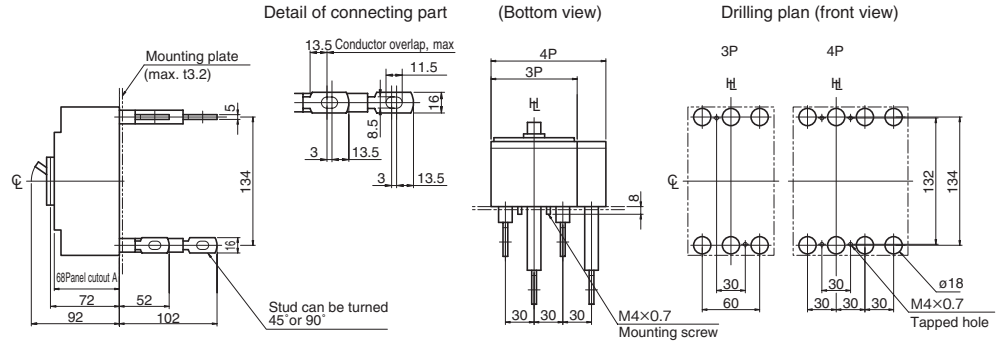

Note: Studs are factory installed in horizontal direction both on the line and load sides.

Panel cutout A (front view)

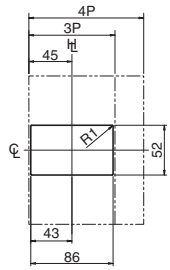

Panel cutout dimensions shown give an allowance of 1.0mm around the handle escutcheon.

Flush-mounted (For leakage alarm lead wires, see the front-connected type)

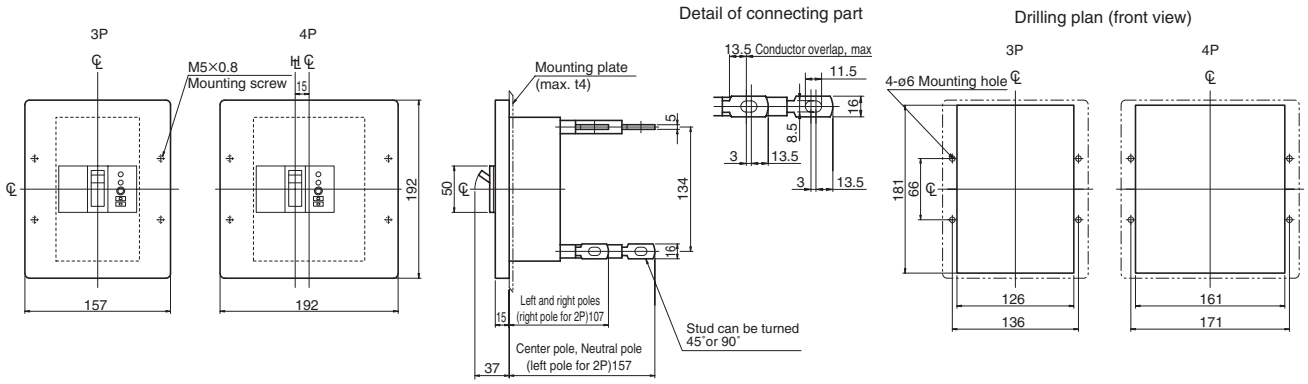

Note: Studs are factory installed in horizontal direction both on the line and load sides.

Control circuit

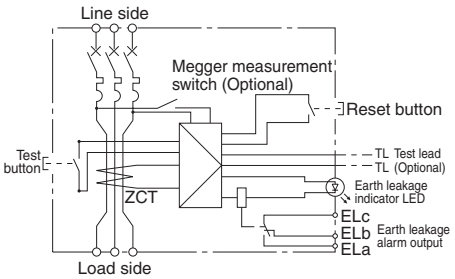

7 Characteristics and Outline Dimensions TemBreak PRO

Circuit Breaker with earth leakage alarm

ZAS125-GF

Ratings and Specifications

Frame size (A)			125			
Type			ZAS125-GF			
Number of poles ⑭⑮			3	4		
■ Ratings						
Rated current, A Calibrated at 40°C			125			
Rated operational voltage V			100-440 common			
Applicable range V			80 – 484			
Rated impulse withstand voltage〔U_{imp}〕 kV			8			
■ Rated breaking capacity, kA						
JIS C 8201-2-1 Ann.2 I_{cu}(sym)	AC	440V	50			
		415V	65			
		240V	85			
■ Earth leakage alarm specifications						
Earth leakage detection (Current operation type)			Electronic			
Rated sensitivity current mA			100/200/500 selectable			
Max. operating time sec			0.1/0.45/1.0 selectable			
Earth leakage alarm output contact configuration ㉚			1c			
Alarm reset function (manual reset) ㊴			Push button ⑧			
Weight (◉ marked standard type) kg			1.3	1.7		
■ Connections and Mountings						
Front-connected (FC)	Terminal screws		◉			
	With extension bars		○ ㊸			
Rear-connected (RC)	Flat bar studs		○			
Plug-in (PM) For switchboards	High-performance (PMB)		—			
	Standard (PMC)		—			
For distribution boards (PMD)			—			
Flush-mounted (FP)	With flat bar studs		○			
Draw-out type (DR)			—			
TemPlug70 (PG)			○	—		
DIN rail mount			○ ⑪			
■ Accessories (optional)		Symbol				
Externally mounted: Motor operator		M C	●			
External operating handle	Breaker-mounted	H B	●			
	Door-mounted (variable depth)	H P	●			
Toggle extension		H A	—			
Mechanical interlock	Slide type	M S	●			
	Rear-connected type	M B	—			
	Link type	M L	—			
	Wire type	MW	—			
Toggle holder		H H	●			
Toggle lock		H L	●			
Terminal cover	For front-connected	C F	●			
	For rear-connected and plug-in	C R	●			
Terminal block for lead		T F	●			
Door flange		D F	—			
CE marking			Non			
Overcurrent trip mechanism			Thermal-magnetic			
Earth leakage indication			LED (Red)			
Colour of cover			Grey Blue			
Trip button (Colour)			Yes (Red)			
Suitability for isolation			Yes			
Reverse connection			Yes			

Notes:

◉ : Standard. This configuration used unless otherwise specified. ○ : Optional standard. Specify when ordering.
● : "yes" or "available". — : "no" or "not available".
⑧ : Optional remote reset or automatic reset available on request. Please apply this when the reset button cannot be pressed due to the installation of external accessories, etc. See page 6-27 for details. ⑪ : Please order the DIN rail adapter separately. See page 6-152. ⑭ : When applying 3-pole type to a 1ø2W circuit, use both ends and do not use the central pole. ⑮ : When applying 3-pole type to a 1ø3W circuit, apply voltage to both ends and connect the neutral wire to the central pole. ㉚ : See page 6-22 for the contact rating. ㊴ : An earth leakage alarm maintains the operating state until pressing the reset button or turning the main circuit power OFF. If the electric leakage continues, it will be reset while you hold down the reset button, but when you release the reset button, it will return to the operating state. ㊸ : For the extension bars, please place the order separately in parts.

Remark: The rated sensitivity current is set to 100mA and the time delay tripping type's operating time is set to 0.45 seconds before delivery.

Time/Current characteristic curves

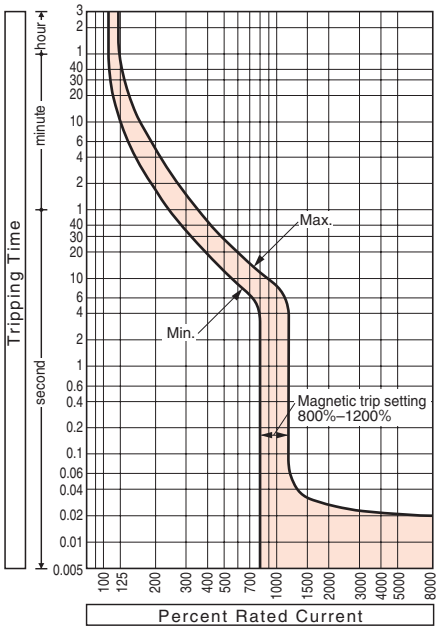

Ambient Compensating Curves

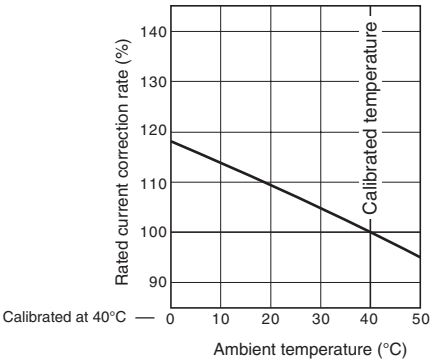

Earth leakage trip characteristic

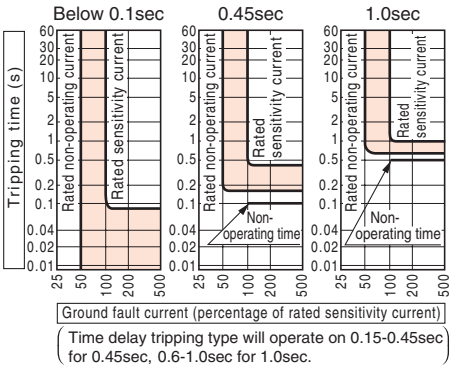

Combinations of Internally Mounted Accessories (Optional)

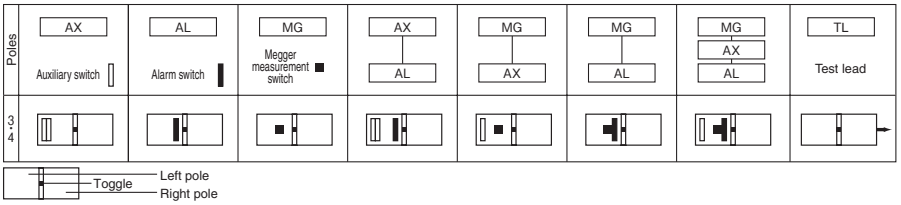

Outline dimensions (mm) ZAS125-GF

Front-connected

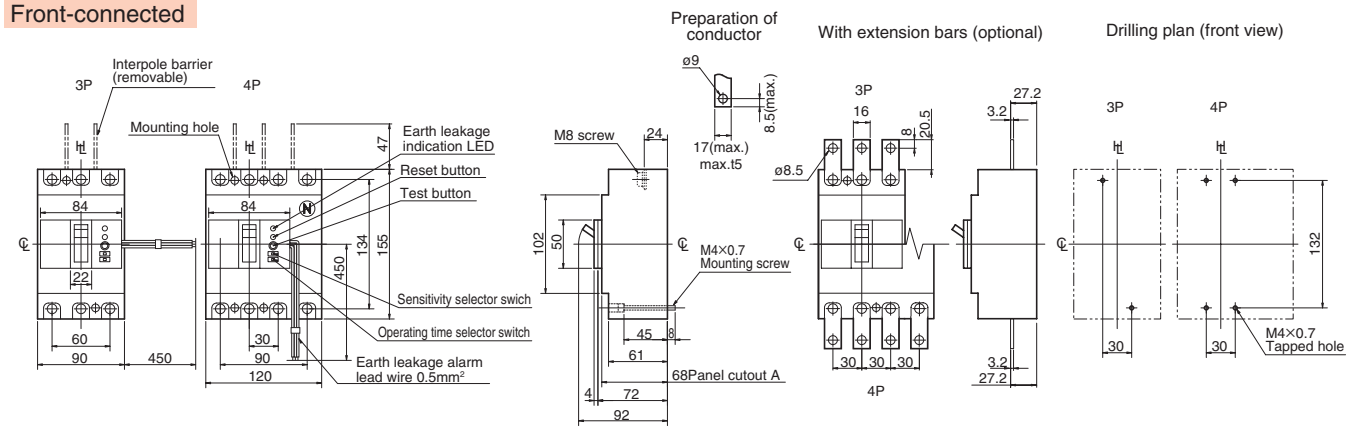

Rear-connected (For leakage alarm lead wires, see the front-connected type)

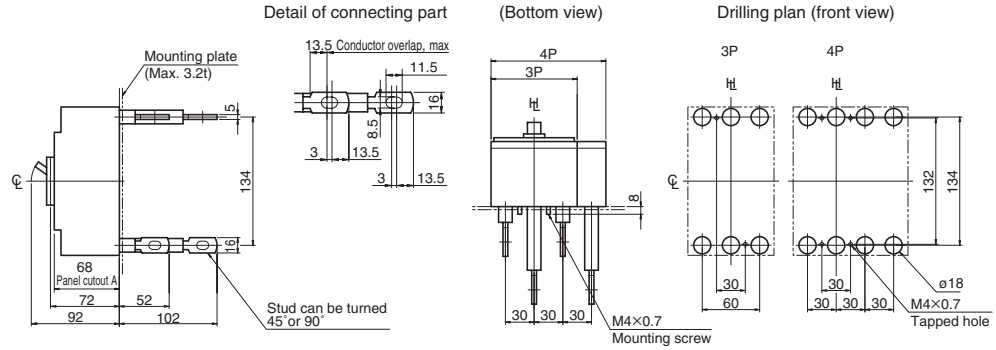

Note: Studs are factory installed in horizontal direction both on the line and load sides.

Panel cutout A (front view)

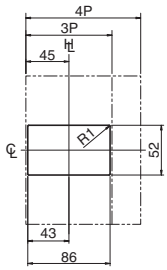

Panel cutout dimensions shown give an allowance of 1.0mm around the handle escutcheon.

Flush-mounted (For leakage alarm lead wires, see the front-connected type)

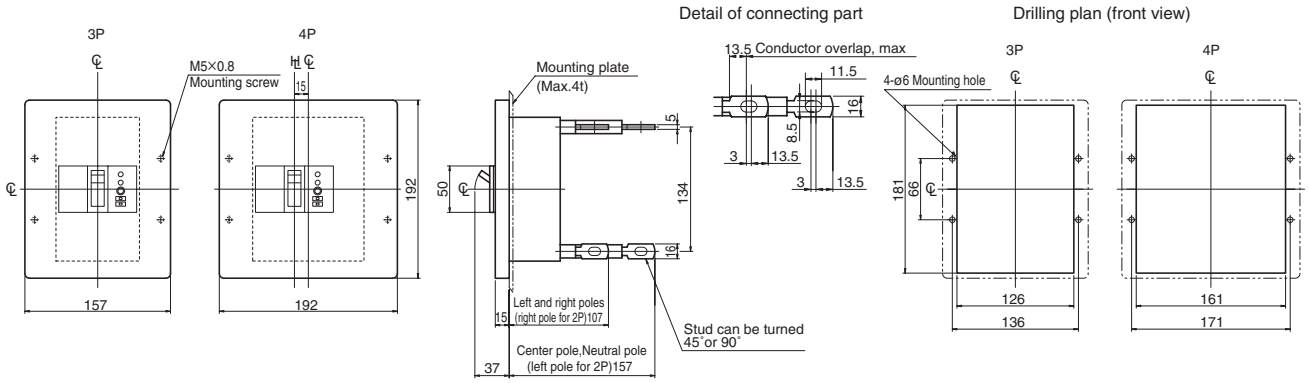

Note: Studs are factory installed in horizontal direction both on the line and load sides.

Control circuit

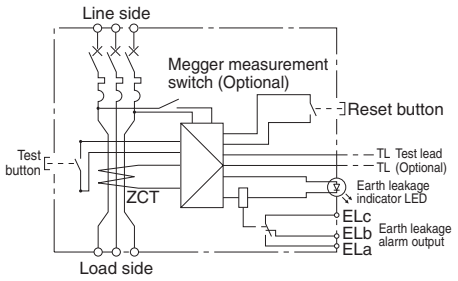

7 Characteristics and Outline Dimensions TemBreak PRO

Circuit Breaker with earth leakage alarm

ZAE250-SF, ZAS250-SF

Ratings and Specifications

Frame size (A)			225	250	225	250
Type			ZAE250-SF		ZAS250-SF	
Number of poles ⑭⑮			3	3	3	3
■ Ratings						
Rated current, A			125 200	250	125 200	250
Calibrated at 40°C			150 225		150 225	
			175		175	
Rated operational voltage V			100-440 common	100-440 common	100-440 common	100-440 common
Applicable range V			80 – 484	80 – 484	80 – 484	80 – 484
Rated impulse withstand voltage〔U_{imp}〕 kV			8	8	8	8
■ Rated breaking capacity, kA						
JIS C 8201-2-1 Ann.2	AC	440V	15	15	30	30
I_{cu}(sym)		415V	25	25	40	40
		240V	35	35	85	85
■ Earth leakage alarm specifications						
Earth leakage detection (Current operation type)			Electronic	Electronic	Electronic	Electronic
Rated sensitivity current mA			100/200/500 selectable	100/200/500 selectable	100/200/500 selectable	100/200/500 selectable
Max. operating time sec			0.1/0.45/1.0 selectable	0.1/0.45/1.0 selectable	0.1/0.45/1.0 selectable	0.1/0.45/1.0 selectable
Earth leakage alarm output contact configuration ㉚			1c	1c	1c	1c
Alarm reset function (manual reset) ㊴			Push button ⑧	Push button ⑧	Push button ⑧	Push button ⑧
Weight (◉ marked standard type) kg			1.7	1.7	1.7	1.7
■ Connections and Mountings						
Front-connected (FC)	Terminal screws		◉	◉	◉	◉
	With extension bars		○ ㊸	○ ㊸	○ ㊸	○ ㊸
Rear-connected (RC)	Flat bar studs		○	○	○	○
Plug-in (PM) For switchboards	High-performance (PMB)		—	—	—	—
	Standard (PMC)		—	—	—	—
For distribution boards (PMD)			—	—	—	—
Flush-mounted (FP)	With flat bar studs		○	○	○	○
Draw-out type (DR)			—	—	—	—
TemPlug70 (PG)			○	○	○	○
DIN rail mount			—	—	—	—
■ Accessories (optional)		Symbol				
Externally mounted: Motor operator		M C	●	●	●	●
External operating handle	Breaker-mounted	H B	●	●	●	●
	Door-mounted (variable depth)	H P	●	●	●	●
Toggle extension		H A	—	—	—	—
Mechanical interlock	Slide type	M S	●	●	●	●
	Rear-connected type	M B	—	—	—	—
	Link type	M L	—	—	—	—
	Wire type	M W	—	—	—	—
Toggle holder		H H	●	●	●	●
Toggle lock		H L	●	●	●	●
Terminal cover	For front-connected	C F	●	●	●	●
	For rear-connected and plug-in	C R	●	●	●	●
Terminal block for lead		T F	●	●	●	●
Door flange		D F	—	—	—	—
CE marking			Non	Non	Non	Non
Overcurrent trip mechanism			Thermal-magnetic	Thermal-magnetic	Thermal-magnetic	Thermal-magnetic
Earth leakage indication			LED (Red)	LED (Red)	LED (Red)	LED (Red)
Colour of cover			Grey Blue	Grey Blue	Grey Blue	Grey Blue
Trip button (Colour)			Yes (Red)	Yes (Red)	Yes (Red)	Yes (Red)
Suitability for isolation			Yes	Yes	Yes	Yes
Reverse connection			Yes	Yes	Yes	Yes

Notes:

◉ : Standard. This configuration used unless otherwise specified.

○ : Optional standard. Specify when ordering. ● : "yes" or "available". — : "no" or "not available".

⑧ : Optional remote reset or automatic reset available on request. Please apply this when the reset button cannot be pressed due to the installation of external accessories, etc. See page 6-27 for details. ⑭ : When applying 3-pole type to a 1ø2W circuit, use both ends and do not use the central pole. ⑮ : When applying 3-pole type to a 1ø3W circuit, apply voltage to both ends and connect the neutral wire to the central pole. ㉚ : See page 6-22 for the contact rating. ㊴ : An earth leakage alarm maintains the operating state until pressing the reset button or turning the main circuit power OFF. If the electric leakage continues, it will be reset while you hold down the reset button, but when you release the reset button, it will return to the operating state. ㊸ : For the extension bars, please place the order separately in parts.

Remark: The rated sensitivity current is set to 100mA and the time delay tripping type's operating time is set to 0.45 seconds before delivery.

Time/Current characteristic curves

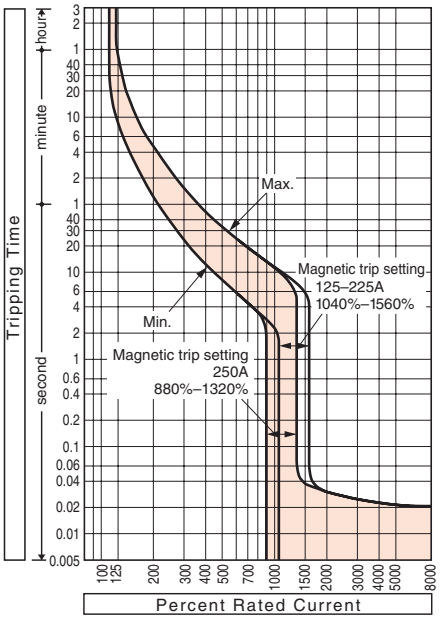

Ambient Compensating Curves

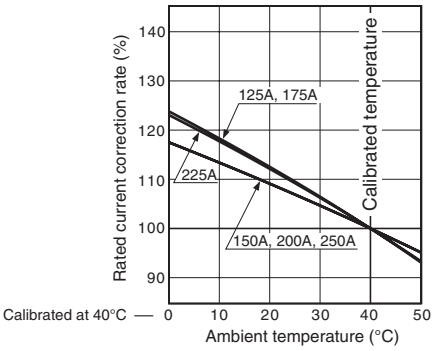

Earth leakage trip characteristic

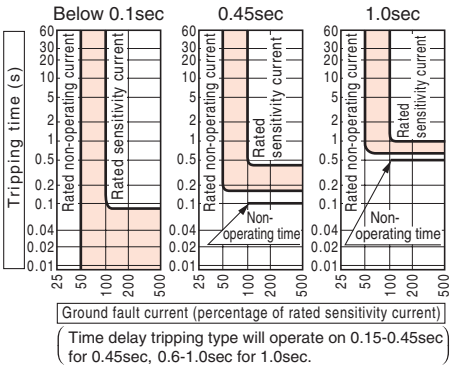

Combinations of Internally Mounted Accessories (Optional)

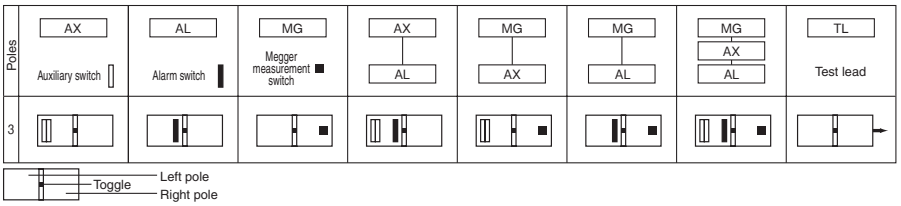

Outline dimensions (mm) — ZAE250-SF, ZAS250-SF

Front-connected

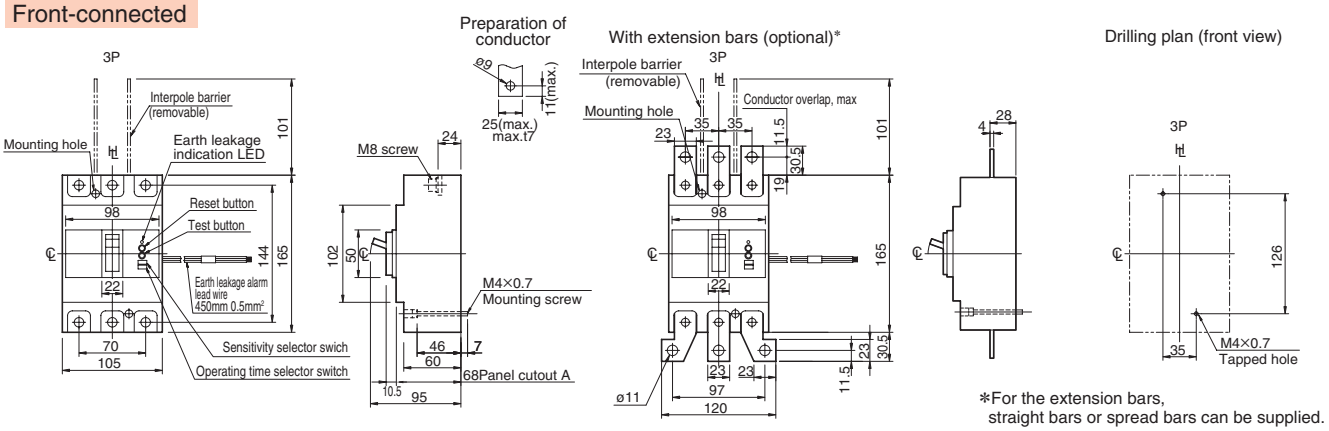

*For the extension bars, straight bars or spread bars can be supplied.

Rear-connected (For leakage alarm lead wires, see the front-connected type)

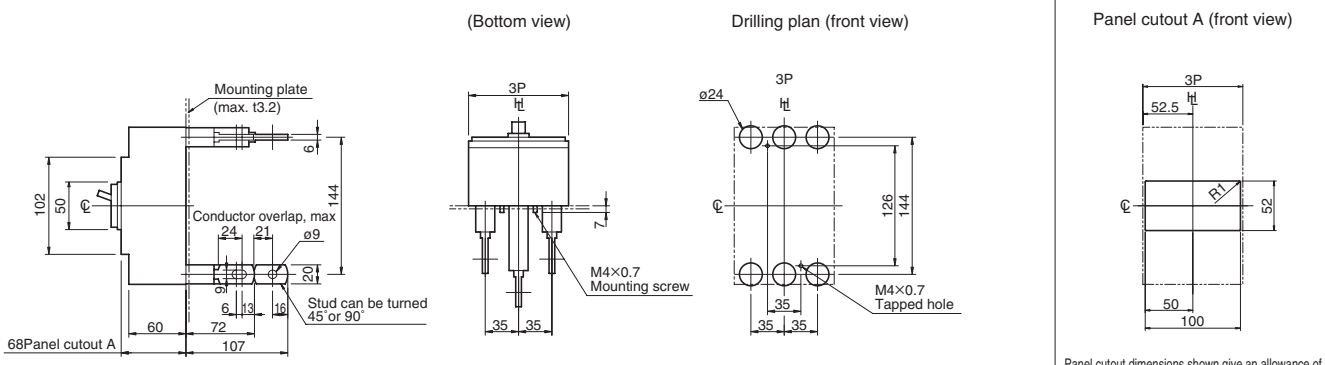

Note: Studs are factory installed in horizontal direction both on the line and load sides.

Panel cutout dimensions shown give an allowance of 1.0mm around the handle escutcheon.

Flush-mounted (For leakage alarm lead wires, see the front-connected type)

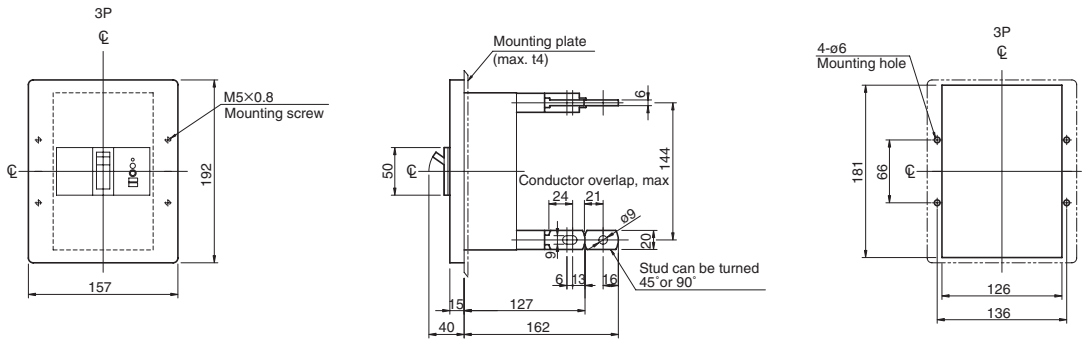

Control circuit

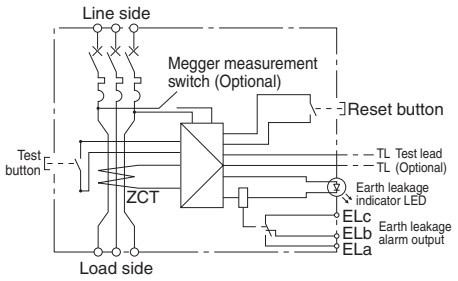

7 Characteristics and Outline Dimensions

TemBreak PRO

Circuit Breaker with earth leakage alarm

ZAS225-GF

Ratings and Specifications

Frame size (A)			225			
Type			ZAS225-GF			
Number of poles ⑭⑮			3	4		
■ Ratings						
Rated current, A			125	200		
Calibrated at 40°C			150	225		
			175			
Rated operational voltage V			100-440 common			
Applicable range V			80 – 484			
Rated impulse withstand voltage〔U_{imp}〕 kV			8			
■ Rated breaking capacity, kA						
JIS C 8201-2-1 Ann.2	AC	440V	50			
I_{cu}(sym)		415V	65			
		240V	85			
■ Earth leakage alarm specifications						
Earth leakage detection (Current operation type)			Electronic			
Rated sensitivity current mA			100/200/500 selectable			
Max. operating time sec			0.1/0.45/1.0 selectable			
Earth leakage alarm output contact configuration ㉚			1c			
Alarm reset function (manual reset) ㊴			Push button ⑧			
Weight (◉ marked standard type) kg			1.7	2.1		
■ Connections and Mountings						
Front-connected (FC)	Terminal screws		◉			
	With extension bars		○ ㊸			
Rear-connected (RC)	Flat bar studs		○			
Plug-in (PM) For switchboards	High-performance (PMB)		—			
	Standard (PMC)		—			
For distribution boards (PMD)			—			
Flush-mounted (FP)	With flat bar studs		○			
Draw-out type (DR)			—			
TemPlug70 (PG)			○	—		
DIN rail mount			—			
■ Accessories (optional)		Symbol				
Externally mounted: Motor operator		M C	●			
External operating handle	Breaker-mounted	H B	●			
	Door-mounted (variable depth)	H P	●			
Toggle extension		H A	—			
Mechanical interlock	Slide type	M S	●			
	Rear-connected type	M B	—			
	Link type	M L	—			
	Wire type	M W	—			
Toggle holder		H H	●			
Toggle lock		H L	●			
Terminal cover	For front-connected	C F	●			
	For rear-connected and plug-in	C R	●			
Terminal block for lead		T F	●			
Door flange		D F	—			
CE marking			Non			
Overcurrent trip mechanism			Thermal-magnetic			
Earth leakage indication			LED (Red)			
Colour of cover			Grey Blue			
Trip button (Colour)			Yes (Red)			
Suitability for isolation			Yes			
Reverse connection			Yes			

Notes:

◉ : Standard. This configuration used unless otherwise specified.

○ : Optional standard. Specify when ordering. ● : "yes" or "available". — : "no" or "not available".

⑧ : Optional remote reset or automatic reset available on request. Please apply this when the reset button cannot be pressed due to the installation of external accessories, etc. See page 6-27 for details. ⑭ : When applying 3-pole type to a 1ø2W circuit, use both ends and do not use the central pole. ⑮ : When applying 3-pole type to a 1ø3W circuit, apply voltage to both ends and connect the neutral wire to the central pole. ㉚ : See page 6-22 for the contact rating. ㊴ : An earth leakage alarm maintains the operating state until pressing the reset button or turning the main circuit power OFF. If the electric leakage continues, it will be reset while you hold down the reset button, but when you release the reset button, it will return to the operating state. ㊸ : For the extension bars, please place the order separately in parts.

Remark: The rated sensitivity current is set to 100mA and the time delay tripping type's operating time is set to 0.45 seconds before delivery.

Time/Current characteristic curves

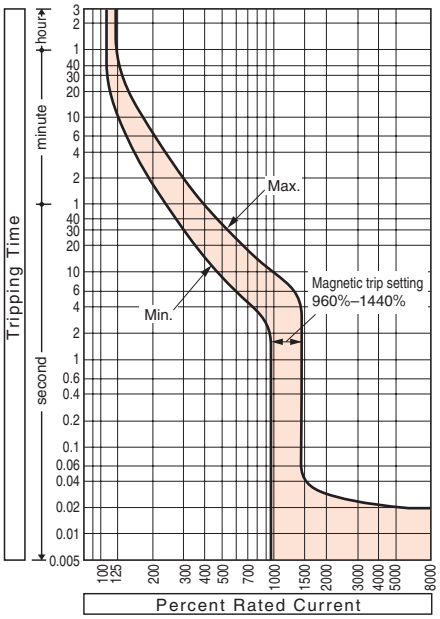

Ambient Compensating Curves

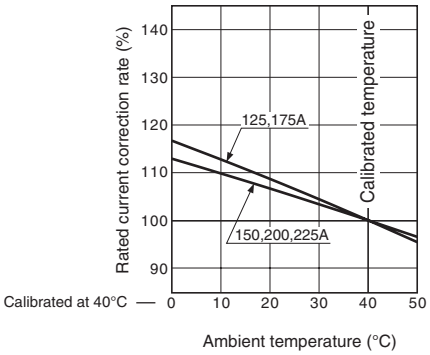

Earth leakage trip characteristic

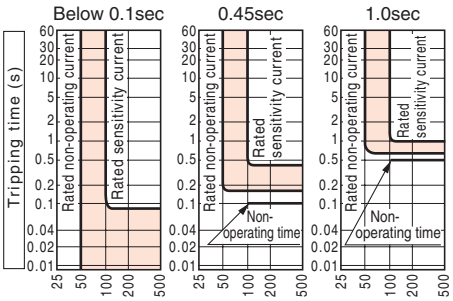

Time delay tripping type will operate on 0.15-0.45sec for 0.45sec, 0.6-1.0sec for 1.0sec.

Combinations of Internally Mounted Accessories (Optional)

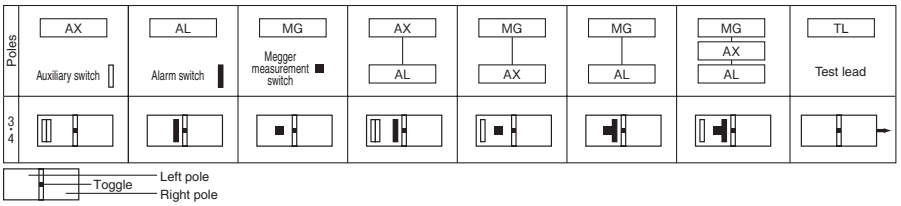

Outline dimensions (mm) ZAS225-GF

Front-connected

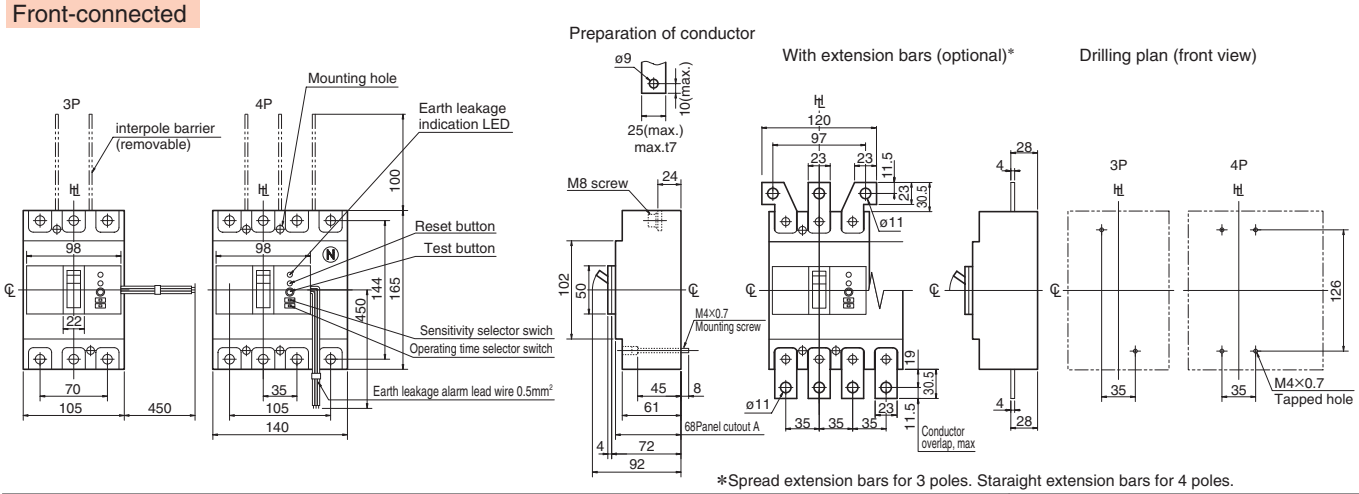

*Spread extension bars for 3 poles. Staraight extension bars for 4 poles.

Rear-connected (For leakage alarm lead wires, see the front-connected type)

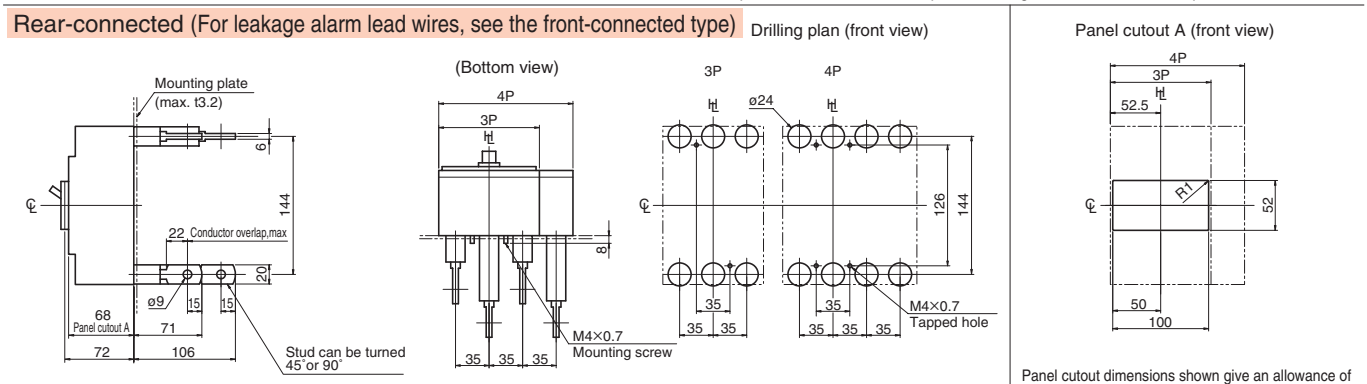

Note: Studs are factory installed in horizontal direction both on the line and load sides.

Panel cutout dimensions shown give an allowance of 1.0mm around the handle escutcheon.

Flush-mounted (For leakage alarm lead wires, see the front-connected type)

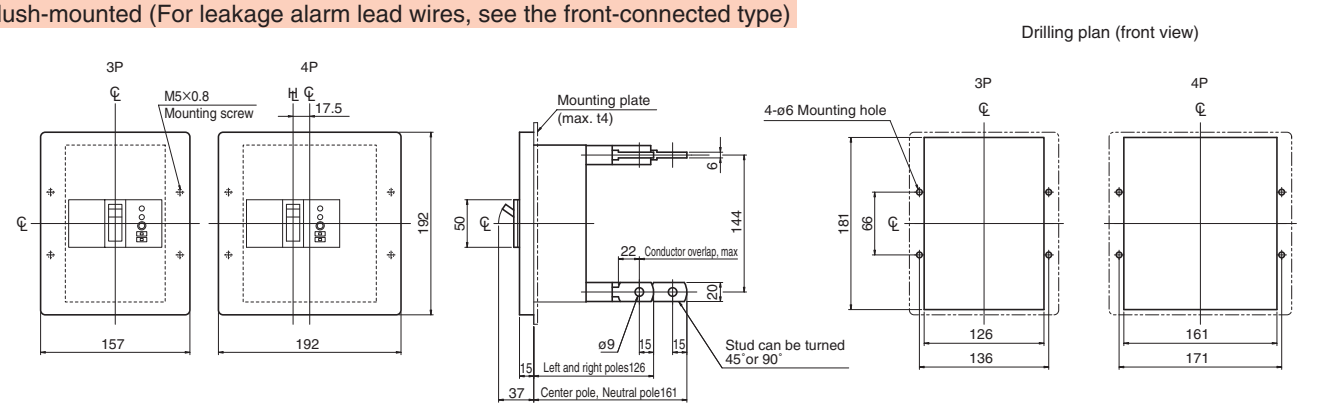

Note: Studs are factory installed in horizontal direction both on the line and load sides.

Control circuit

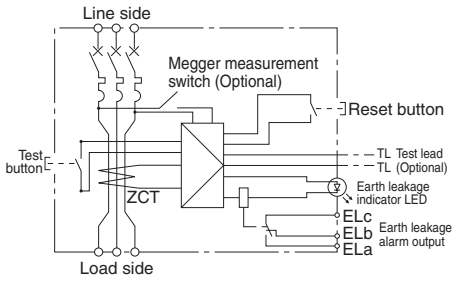

7 Characteristics and Outline Dimensions TemBreak PRO

Circuit Breaker with earth leakage alarm

ZAS250-GF

Ratings and Specifications

Frame size (A)			250			
Type			ZAS250-GF			
Number of poles ⑭⑮			3	4		
■ Ratings						
Rated current, A Calibrated at 40°C			250			
Rated operational voltage V			100-440 common			
Applicable range V			80 – 484			
Rated impulse withstand voltage〔U_{imp}〕 kV			8			
■ Rated breaking capacity, kA						
JIS C 8201-2-1 Ann.2	AC	440V	50			
I_{cu}(sym)		415V	65			
		240V	85			
■ Earth leakage alarm specifications						
Earth leakage detection (Current operation type)			Electronic			
Rated sensitivity current mA			100/200/500 selectable			
Max. operating time sec			0.1/0.45/1.0 selectable			
Earth leakage alarm output contact configuration ㉚			1c			
Alarm reset function (manual reset) ㊴			Push button ⑧			
Weight (◉ marked standard type) kg			1.7	2.1		
■ Connections and Mountings						
Front-connected (FC)	Terminal screws		◉			
	With extension bars		○ ㊸			
Rear-connected (RC)	Flat bar studs		○			
Plug-in (PM) For switchboards	High-performance (PMB)		—			
	Standard (PMC)		—			
For distribution boards (PMD)			—			
Flush-mounted (FP)	With flat bar studs		○			
Draw-out type (DR)			—			
TemPlug70 (PG)			○	—		
DIN rail mount			—			
■ Accessories (optional)		Symbol				
Externally mounted: Motor operator		M C	●			
External operating handle	Breaker-mounted	H B	●			
	Door-mounted (variable depth)	H P	●			
Toggle extension		H A	—			
Mechanical interlock	Slide type	M S	●			
	Rear-connected type	M B	—			
	Link type	M L	—			
	Wire type	M W	—			
Toggle holder		H H	●			
Toggle lock		H L	●			
Terminal cover	For front-connected	C F	●			
	For rear-connected and plug-in	C R	●			
Terminal block for lead		T F	●			
Door flange		D F	—			
CE marking			Non			
Overcurrent trip mechanism			Thermal-magnetic			
Earth leakage indication			LED (Red)			
Colour of cover			Grey Blue			
Trip button (Colour)			Yes (Red)			
Suitability for isolation			Yes			
Reverse connection			Yes			

Notes:

◉ : Standard. This configuration used unless otherwise specified.

○ : Optional standard. Specify when ordering. ● : "yes" or "available". — : "no" or "not available".

⑧ : Optional remote reset or automatic reset available on request. Please apply this when the reset button cannot be pressed due to the installation of external accessories, etc. See page 6-27 for details. ⑭ : When applying 3-pole type to a 1ø2W circuit, use both ends and do not use the central pole. ⑮ : When applying 3-pole type to a 1ø3W circuit, apply voltage to both ends and connect the neutral wire to the central pole. ㉚ : See page 6-22 for the contact rating. ㊴ : An earth leakage alarm maintains the operating state until pressing the reset button or turning the main circuit power OFF. If the electric leakage continues, it will be reset while you hold down the reset button, but when you release the reset button, it will return to the operating state. ㊸ : For the extension bars, please place the order separately in parts.

Remark: The rated sensitivity current is set to 100mA and the time delay tripping type's operating time is set to 0.45 seconds before delivery.

Time/Current characteristic curves

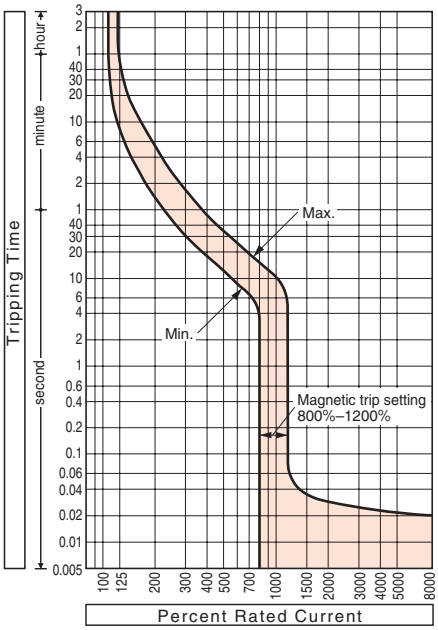

Ambient Compensating Curves

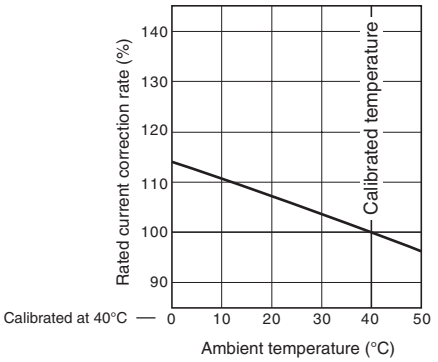

Earth leakage trip characteristic

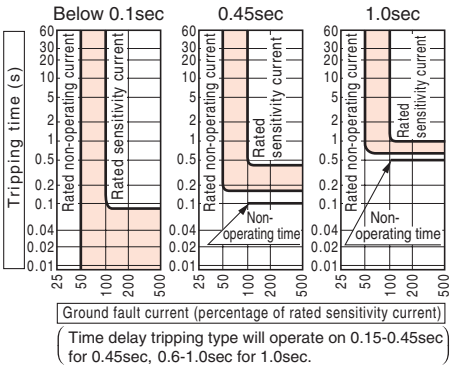

Combinations of Internally Mounted Accessories (Optional)

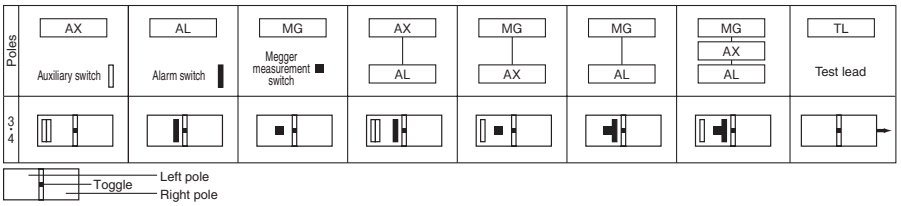

Outline dimensions (mm) ZAS250-GF

Front-connected

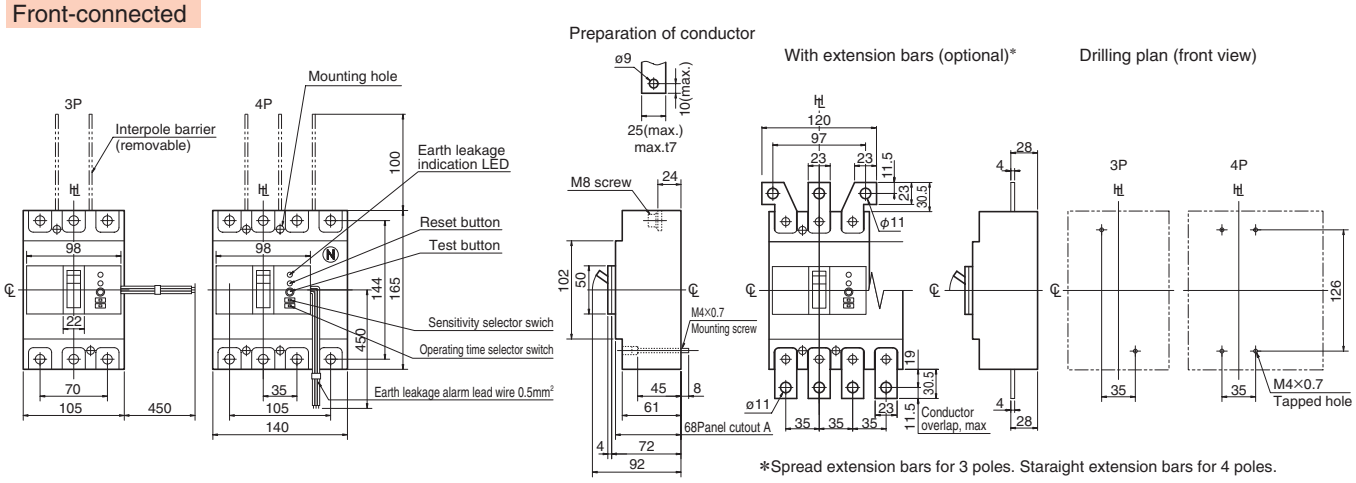

Rear-connected (For leakage alarm lead wires, see the front-connected type)

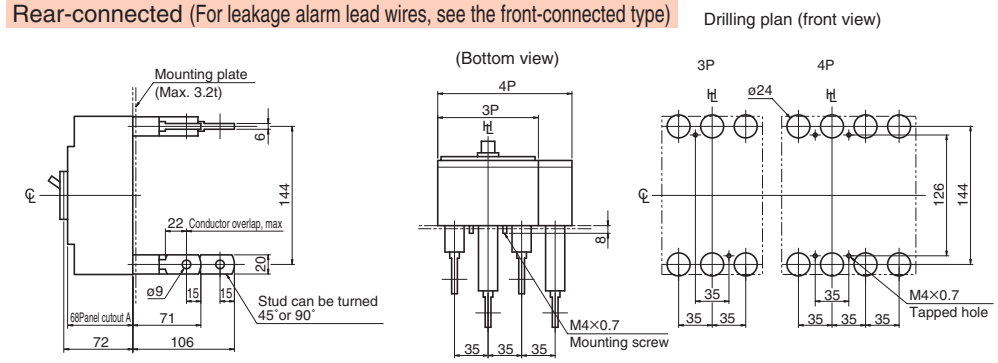

Note: Studs are factory installed in horizontal direction both on the line and load sides.

Panel cutout A (front view)

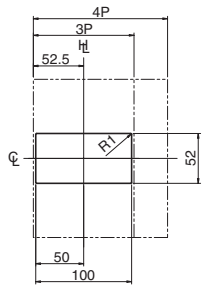

Panel cutout dimensions shown give an allowance of 1.0mm around the handle escutcheon.

Flush-mounted (For leakage alarm lead wires, see the front-connected type)

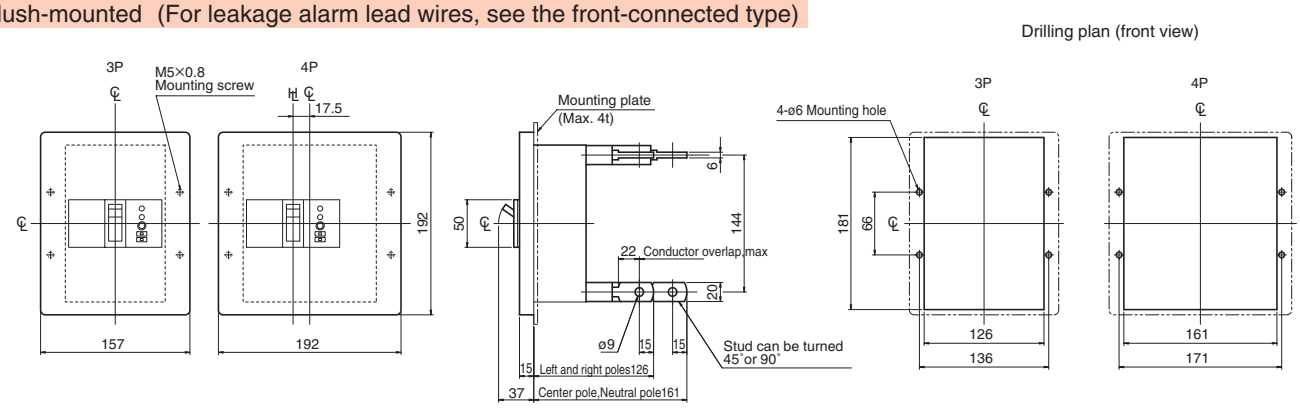

Note: Studs are factory installed in horizontal direction both on the line and load sides.

Control circuit

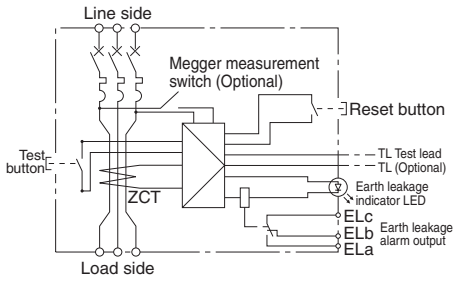

7 Characteristics and Outline Dimensions TemBreak PRO

Circuit Breaker with earth leakage alarm

ZAE400-NF, ZAS400-NF, ZAS400-GF

Ratings and Specifications

Frame size (A)			400	400		400	
Type			ZAE400-NF	ZAS400-NF		ZAS400-GF	
Number of poles ⑭⑮			3	3	4	3	4
■ Ratings							
Rated current, A			250 400	250 400		250 400	
Calibrated at 40°C			300	300		300	
			350	350		350	
Rated operational voltage V			100-440 common	100-440 common		100-440 common	
Applicable range V			80 – 484	80 – 484		80 – 484	
Rated impulse withstand voltage〔U_{imp}〕 kV			8	8		8	
■ Rated breaking capacity, kA							
JIS C 8201-2-1 Ann.2	AC	440V	22	45		65	
I_{cu}(sym)		415V	25	50		70	
		240V	35	85		100	
■ Earth leakage alarm specifications							
Earth leakage detection (Current operation type)			Electronic	Electronic		Electronic	
Rated sensitivity current mA			100/200/500 selectable	100/200/500 selectable		100/200/500 selectable	
Max. operating time sec			0.1/0.45/1.0 selectable	0.1/0.45/1.0 selectable		0.1/0.45/1.0 selectable	
Earth leakage alarm output contact configuration ㉚			1c	1c		1c	
Alarm reset function (manual reset) ㊴			Push button ⑧	Push button ⑧		Push button ⑧	
Weight (◉ marked standard type) kg			5.2	5.2	6.6	5.2	6.6
■ Connections and Mountings							
Front-connected (FC)	Terminal screws		◉	◉		◉	
	With extension bars		○	○		○	
Rear-connected (RC)	Flat bar studs		○	○		○	
Plug-in (PM) For switchboards	High-performance (PMB)		—	—		—	
	Standard (PMC)		—	—		—	
For distribution boards (PMD)			—	—		—	
Flush-mounted (FP)	With flat bar studs		○	○		○	
Draw-out type (DR)			—	—		—	
TemPlug70 (PG)			○	○	—	○	—
DIN rail mount			—	—		—	
■ Accessories (optional)		Symbol					
Externally mounted: Motor operator		M C	●	●		●	
External operating handle	Breaker-mounted	H B	●	●		●	
	Door-mounted (variable depth)	H P	●	●		●	
Toggle extension		H A	●	●		●	
Mechanical interlock	Slide type	M S	●	●		●	
	Rear-connected type	M B	—	—		—	
	Link type	M L	—	—		—	
	Wire type	M W	—	—		—	
Toggle holder		H H	●	●		●	
Toggle lock		H L	●	●		●	
Terminal cover	For front-connected	C F	●	●		●	
	For rear-connected and plug-in	C R	●	●		●	
Terminal block for lead		T F	●	●		●	
Door flange		D F	—	—		—	
CE marking			Non	Non		Non	
Overcurrent trip mechanism			Thermal-magnetic	Thermal-magnetic (adjustable)		Thermal-magnetic (adjustable)	
Earth leakage indication			LED (Red)	LED (Red)		LED (Red)	
Colour of cover			Grey Blue	Grey Blue		Grey Blue	
Trip button (Colour)			Yes (Red)	Yes (Red)		Yes (Red)	
Suitability for isolation			Yes	Yes		Yes	
Reverse connection			Yes	Yes		Yes	

Notes:

◉ : Standard. This configuration used unless otherwise specified.

○ : Optional standard. Specify when ordering. ● : "yes" or "available". — : "no" or "not available".

⑧ : Optional remote reset or automatic reset available on request. Please apply this when the reset button cannot be pressed due to the installation of external accessories, etc. See page 6-27 for details. ⑭ : When applying 3-pole type to a 1ø2W circuit, use both ends and do not use the central pole. ⑮ : When applying 3-pole type to a 1ø3W circuit, apply voltage to both ends and connect the neutral wire to the central pole. ㉚ : See page 6-22 for the contact rating.

㊴ : An earth leakage alarm maintains the operating state until pressing the reset button or turning the main circuit power OFF. If the electric leakage continues, it will be reset while you hold down the reset button, but when you release the reset button, it will return to the operating state.

Remark: The rated sensitivity current is set to 100mA and the time delay tripping type's operating time is set to 0.45 seconds before delivery.

Time/Current characteristic curves ZAS400-NF, ZAS400-GF

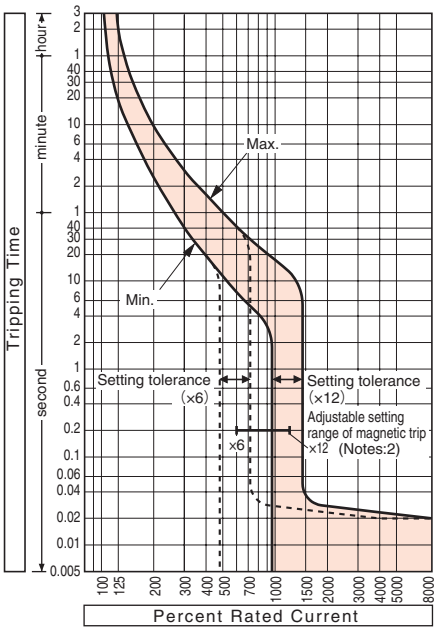

Ambient Compensating Curves

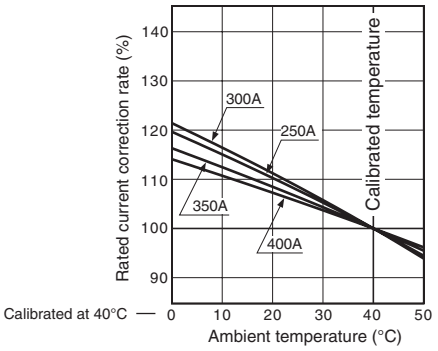

Magnetic trip pick-up current

Rated current (A)	Magnetic trip pick-up current (adjustable range) (A) $I_n \times 12$	11	10	9	8	7	6
250	3000	2750	2500	2250	2000	1750	1500
300	3600	3300	3000	2700	2400	2100	1800
350	4200	3850	3500	3150	2800	2450	2100
400	4800	4400	4000	3600	3200	2800	2400

Notes (1) : Setting tolerance: ±20%.
(2) : **ZAE400-NF** type is a single point fixed setting of 10 times the rated current. Setting tolerance: ±10%.
(3) : The Time/Current characteristic curve is for adjustable instantaneous trip.

Remark (1) : If the model is adjustable and unless otherwise stated when ordering, the scale is factory set to ×12.

Earth leakage trip characteristic

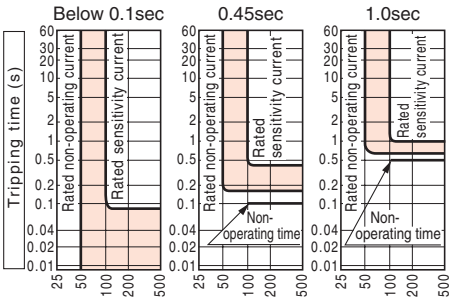

(Time delay tripping type will operate on 0.15-0.45sec for 0.45sec, 0.6-1.0sec for 1.0sec.)

Combinations of Internally Mounted Accessories (Optional)

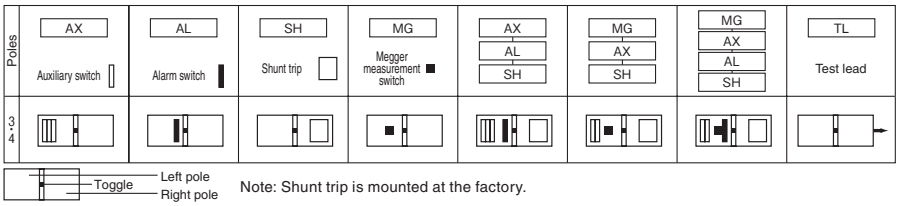

Note: Shunt trip is mounted at the factory.

Outline dimensions (mm) — ZAE400-NF, ZAS400-NF, ZAS400-GF

Front-connected

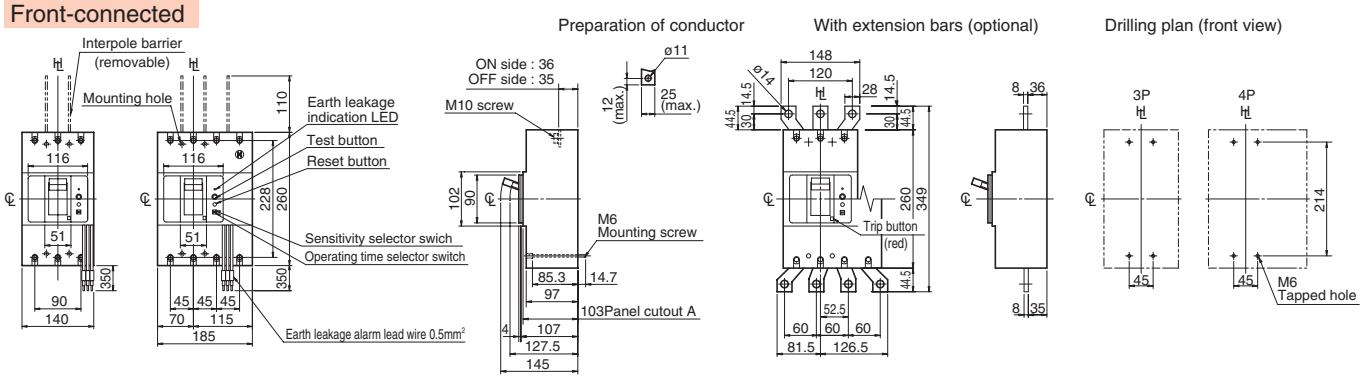

Rear-connected (For leakage alarm lead wires, see the front-connected type)

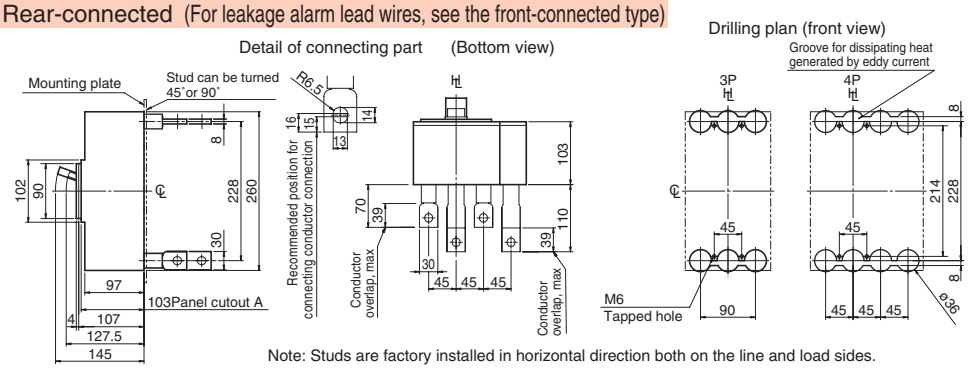

Note: Studs are factory installed in horizontal direction both on the line and load sides.

Panel cutout A (front view)

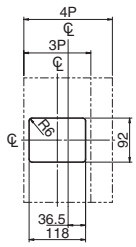

Panel cutout dimensions shown give an allowance of 1.0mm around the handle escutcheon.

Flush-mounted (For leakage alarm lead wires, see the front-connected type)

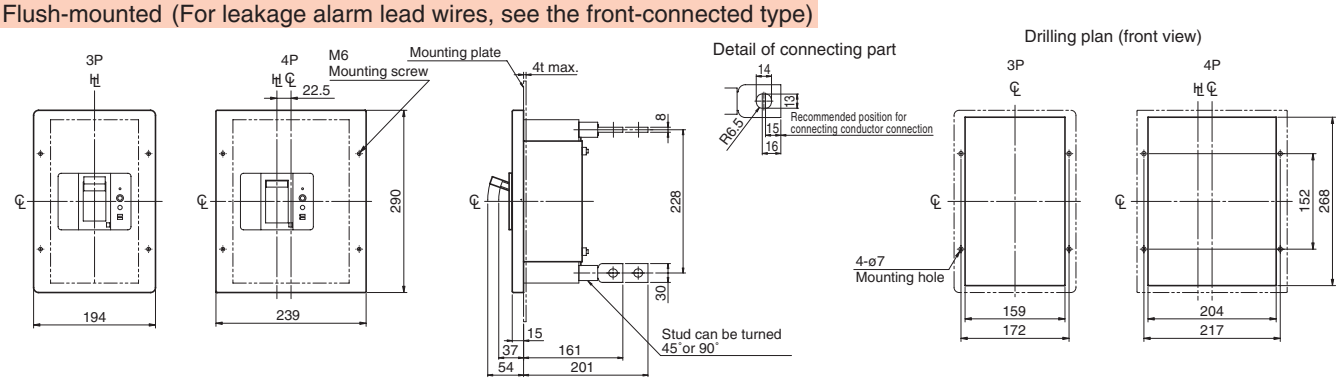

Note: Studs are factory installed in horizontal direction both on the line and load sides.

Control circuit

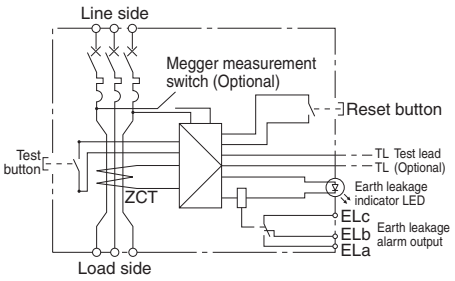

Time/Current characteristic curves — ZAE400-NF

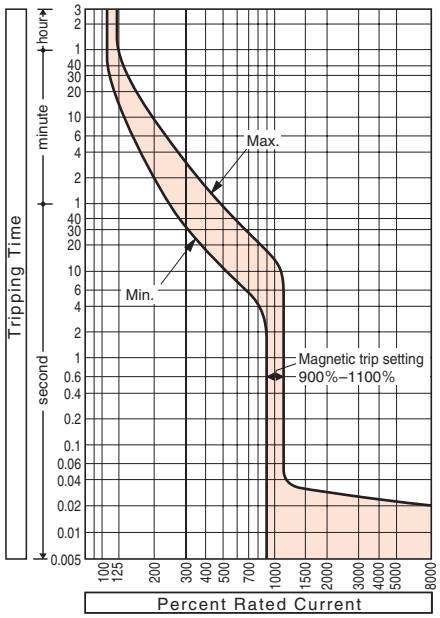

7 Characteristics and Outline Dimensions TemBreak PRO

Circuit Breaker with earth leakage alarm

ZAS630-CF, ZAS630-NF

Ratings and Specifications

Frame size (A)			600	630	600	630
Type			ZAS630-CF		ZAS630-NF	
Number of poles ⑭⑮			3	3	3	3
■ Ratings						
Rated current, A			500	630	500	630
Calibrated at 40°C			600		600	
Rated operational voltage V			100-440 common	100-440 common	100-440 common	100-440 common
Applicable range V			80 – 484	80 – 484	80 – 484	80 – 484
Rated impulse withstand voltage〔U_{imp}〕 kV			8	8	8	8
■ Rated breaking capacity, kA						
JIS C 8201-2-1 Ann.2	AC	440V	30	30	45	45
I_{cu}(sym)		415V	36	36	50	50
		240V	50	50	85	85
■ Earth leakage alarm specifications						
Earth leakage detection (Current operation type)			Electronic	Electronic	Electronic	Electronic
Rated sensitivity current mA			100/200/500 selectable	100/200/500 selectable	100/200/500 selectable	100/200/500 selectable
Max. operating time sec			0.1/0.45/1.0 selectable	0.1/0.45/1.0 selectable	0.1/0.45/1.0 selectable	0.1/0.45/1.0 selectable
Earth leakage alarm output contact configuration ㉚			1c	1c	1c	1c
Alarm reset function (manual reset) ㊴			Push button ⑧	Push button ⑧	Push button ⑧	Push button ⑧
Weight (◉ marked standard type) kg			10.0	10.0	10.0	10.0
■ Connections and Mountings						
Front-connected (FC)	Terminal screws		—	—	—	—
	With extension bars		◉	◉	◉	◉
Rear-connected (RC)	Flat bar studs		○	○	○	○
Plug-in (PM) For switchboards	High-performance (PMB)		—	—	—	—
	Standard (PMC)		—	—	—	—
For distribution boards (PMD)			—	—	—	—
Flush-mounted (FP)	With flat bar studs		○	○	○	○
Draw-out type (DR)			—	—	—	—
TemPlug70 (PG)			○	○	○	○
DIN rail mount			—	—	—	—
■ Accessories (optional)		Symbol				
Externally mounted: Motor operator		M C	●	●	●	●
External operating handle	Breaker-mounted	H B	●	●	●	●
	Door-mounted (variable depth)	H P	●	●	●	●
Toggle extension		H A	●	●	●	●
Mechanical interlock	Slide type	M S	●	●	●	●
	Rear-connected type	M B	—	—	—	—
	Link type	M L	—	—	—	—
	Wire type	M W	—	—	—	—
Toggle holder		H H	●	●	●	●
Toggle lock		H L	●	●	●	●
Terminal cover	For front-connected	C F	●	●	●	●
	For rear-connected and plug-in	C R	●	●	●	●
Terminal block for lead		T F	●	●	●	●
Door flange		D F	—	—	—	—
CE marking			Non	Non	Non	Non
Overcurrent trip mechanism			Thermal-magnetic (adjustable)	Thermal-magnetic (adjustable)	Thermal-magnetic (adjustable)	Thermal-magnetic (adjustable)
Earth leakage indication			LED (Red)	LED (Red)	LED (Red)	LED (Red)
Colour of cover			Grey Blue	Grey Blue	Grey Blue	Grey Blue
Trip button (Colour)			Yes (Red)	Yes (Red)	Yes (Red)	Yes (Red)
Suitability for isolation			Yes	Yes	Yes	Yes
Reverse connection			Yes	Yes	Yes	Yes

Notes:

◉ : Standard. This configuration used unless otherwise specified.

○ : Optional standard. Specify when ordering. ● : "yes" or "available". — : "no" or "not available".

⑧ : Optional remote reset or automatic reset available on request. Please apply this when the reset button cannot be pressed due to the installation of external accessories, etc. See page 6-27 for details. ⑭ : When applying 3-pole type to a 1ø2W circuit, use both ends and do not use the central pole. ⑮ : When applying 3-pole type to a 1ø3W circuit, apply voltage to both ends and connect the neutral wire to the central pole. ㉚ : See page 6-22 for the contact rating.

㊴ : An earth leakage alarm maintains the operating state until pressing the reset button or turning the main circuit power OFF. If the electric leakage continues, it will be reset while you hold down the reset button, but when you release the reset button, it will return to the operating state.

Remark: The rated sensitivity current is set to 100mA and the time delay tripping type's operating time is set to 0.45 seconds before delivery.

Combinations of Internally Mounted Accessories (Optional)

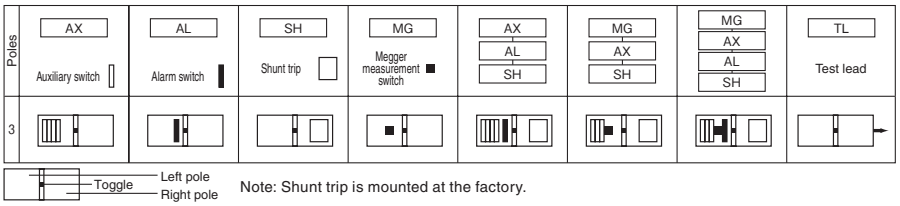

Note: Shunt trip is mounted at the factory.

Time/Current characteristic curves

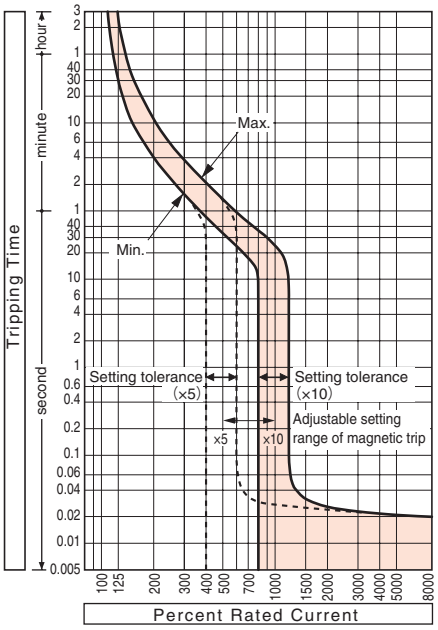

Ambient Compensating Curves

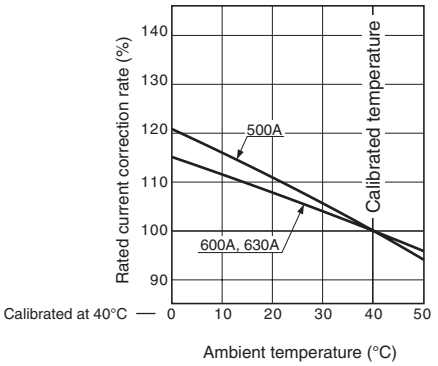

Magnetic trip pick-up current

Rated current (A)	Magnetic trip pick-up current (adjustable range) (A) $I_n \times 10$	9	8	7	6	5
500	5000	4500	4000	3500	3000	2500
600	6000	5400	4800	4200	3600	3000
630	6300	5670	5040	4410	3780	3150

Note (1) : Setting tolerance: ±20%.

Remark (1) : Unless otherwise stated when ordering, the selector dial is factory set to position "10".

Earth leakage trip characteristic

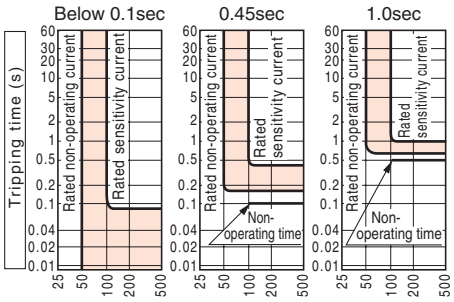

(Time delay tripping type will operate on 0.15-0.45sec for 0.45sec, 0.6-1.0sec for 1.0sec.)

Outline dimensions (mm) ZAS630-CF, ZAS630-NF

Front-connected

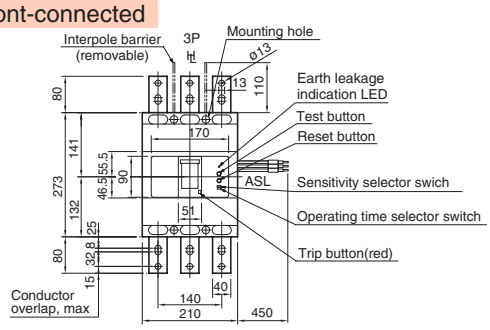

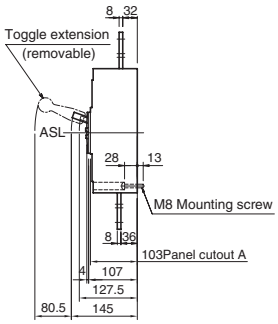

Drilling plan (front view)

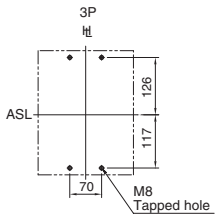

Rear-connected

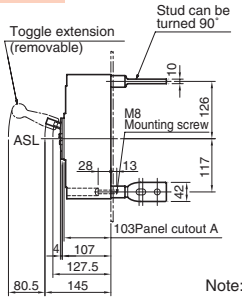

(Bottom view)

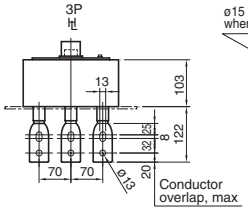

Drilling plan (front view)

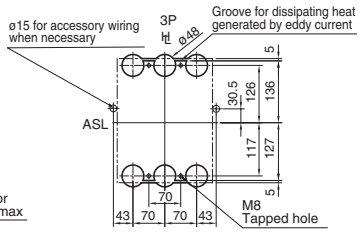

Panel cutout A (front view)

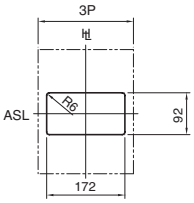

Panel cutout dimensions shown give an allowance of 1.0mm around the handle escutcheon.

Note: Studs are factory installed in horizontal direction both on the line and load sides.

Flush-mounted

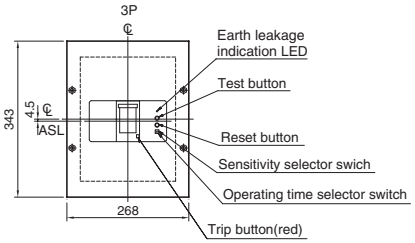

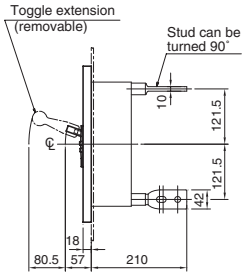

Drilling plan (front view)

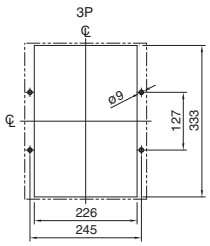

Note: Studs are factory installed in horizontal direction both on the line and load sides.

Control circuit

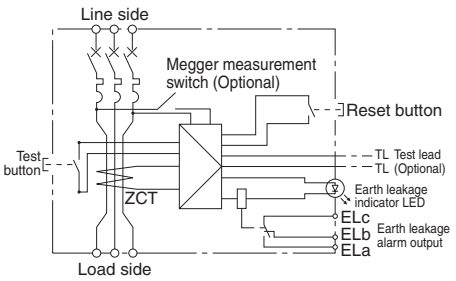

7 Characteristics and Outline Dimensions TemBreak PRO

Circuit Breaker with earth leakage alarm

ZAS800-CF, ZAS800-NF

Ratings and Specifications

Frame size (A)		800	800	
Type		ZAS800-CF	ZAS800-NF	
Number of poles ⑭⑮		3	3	
■ Ratings				
Rated current, A		700	700	
Calibrated at 40°C		800	800	
Rated operational voltage V		100-440 common	100-440 common	
Applicable range V		80 – 484	80 – 484	
Rated impulse withstand voltage〔U_{imp}〕 kV		8	8	
■ Rated breaking capacity, kA				
JIS C 8201-2-1 Ann.2 AC	440V	30	45	
I_{cu}(sym)	415V	36	50	
	240V	50	85	
■ Earth leakage alarm specifications				
Earth leakage detection (Current operation type)		Electronic	Electronic	
Rated sensitivity current mA		100/200/500 selectable	100/200/500 selectable	
Max. operating time sec		0.1/0.45/1.0 selectable	0.1/0.45/1.0 selectable	
Earth leakage alarm output contact configuration ㉚		1c	1c	
Alarm reset function (manual reset) ㊴		Push button ⑧	Push button ⑧	
Weight (◉ marked standard type) kg		11.0	11.0	
■ Connections and Mountings				
Front-connected (FC)	Terminal screws	—	—	
	With extension bars	◉	◉	
Rear-connected (RC)	Flat bar studs	○	○	
Plug-in (PM) For switchboards	High-performance (PMB)	—	—	
	Standard (PMC)	—	—	
For distribution boards (PMD)		—	—	
Flush-mounted (FP)	With flat bar studs	○	○	
Draw-out type (DR)		—	—	
TemPlug70 (PG)		—	—	
DIN rail mount		—	—	
■ Accessories (optional)	Symbol			
Externally mounted: Motor operator	M C	●	●	
External operating handle: Breaker-mounted	H B	●	●	
External operating handle: Door-mounted (variable depth)	H P	●	●	
Toggle extension	H A	●	●	
Mechanical interlock: Slide type	M S	●	●	
Mechanical interlock: Rear-connected type	M B	—	—	
Mechanical interlock: Link type	M L	—	—	
Mechanical interlock: Wire type	M W	—	—	
Toggle holder	H H	●	●	
Toggle lock	H L			
Terminal cover: For front-connected	C F	●	●	
Terminal cover: For rear-connected and plug-in	C R	●	●	
Terminal block for lead	T F	●	●	
Door flange	D F	—	—	
CE marking		Non	Non	
Overcurrent trip mechanism		Thermal-magnetic (adjustable)	Thermal-magnetic (adjustable)	
Earth leakage indication		LED (Red)	LED (Red)	
Colour of cover		Grey Blue	Grey Blue	
Trip button (Colour)		Yes (Red)	Yes (Red)	
Suitability for isolation		Yes	Yes	
Reverse connection		Yes	Yes	

Notes:

◉ : Standard. This configuration used unless otherwise specified. ○ : Optional standard. Specify when ordering.

● : "yes" or "available". — : "no" or "not available".

⑧ : Optional remote reset or automatic reset available on request. Please apply this when the reset button cannot be pressed due to the installation of external accessories, etc. See page 6-27 for details. ⑭ : When applying 3-pole type to a 1ø2W circuit, use both ends and do not use the central pole. ⑮ : When applying 3-pole type to a 1ø3W circuit, apply voltage to both ends and connect the neutral wire to the central pole. ㉚ : See page 6-22 for the contact rating.

㊴ : An earth leakage alarm maintains the operating state until pressing the reset button or turning the main circuit power OFF. If the electric leakage continues, it will be reset while you hold down the reset button, but when you release the reset button, it will return to the operating state.

Remark: The rated sensitivity current is set to 100mA and the time delay tripping type's operating time is set to 0.45 seconds before delivery.

Combinations of Internally Mounted Accessories (Optional)

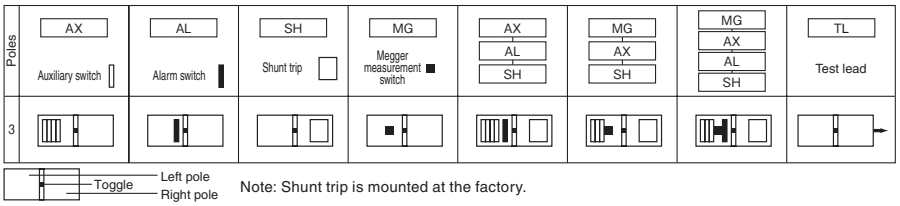

Note: Shunt trip is mounted at the factory.

Time/Current characteristic curves

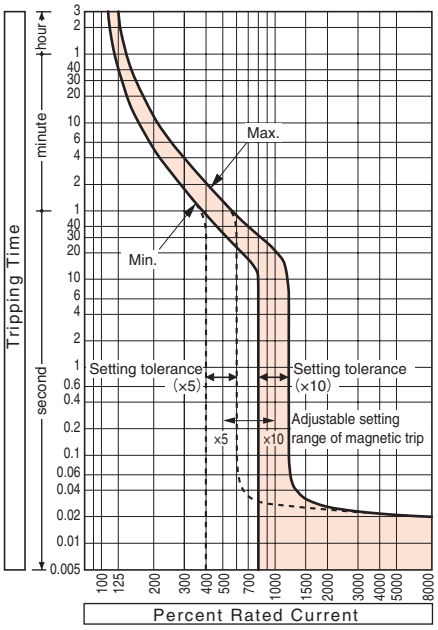

Ambient Compensating Curves

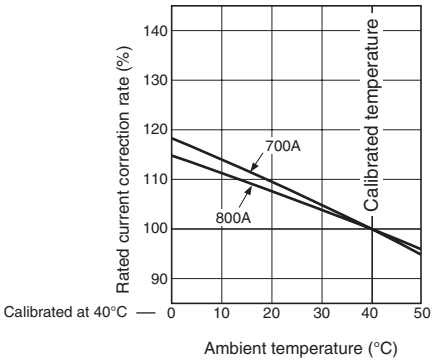

Magnetic trip pick-up current

Rated current (A)	Magnetic trip pick-up current (adjustable range) (A) I_n × 10	9	8	7	6	5
700	7000	6300	5600	4900	4200	3500
800	8000	7200	6400	5600	4800	4000

Note (1) : Setting tolerance: ±20%.

Remark (1) : Unless otherwise stated when ordering, the selector dial is factory set to position "10".

Earth leakage trip characteristic

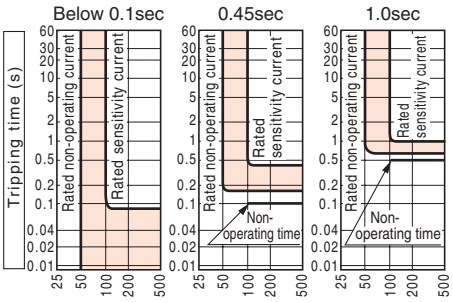

(Time delay tripping type will operate on 0.15-0.45sec for 0.45sec, 0.6-1.0sec for 1.0sec.)

Outline dimensions (mm) ZAS800-CF, ZAS800-NF

Front-connected

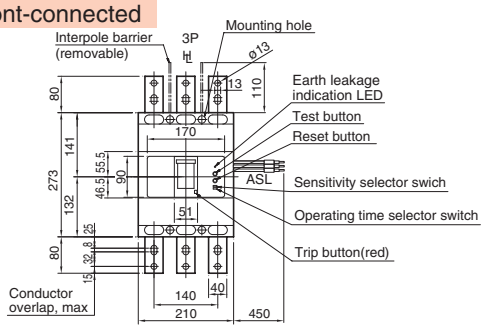

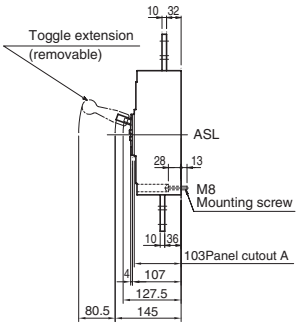

Drilling plan (front view)

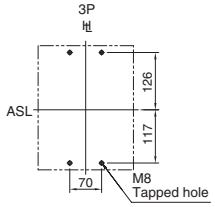

Rear-connected

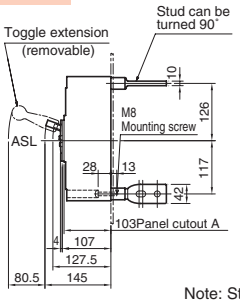

(Bottom view)

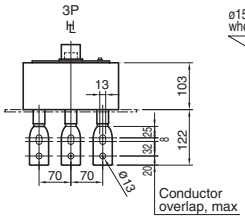

Drilling plan (front view)

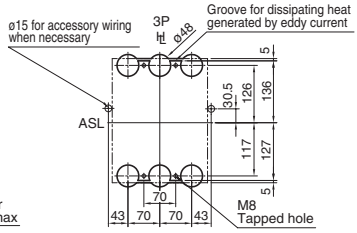

Panel cutout A (front view)

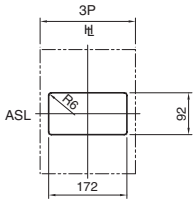

Panel cutout dimensions shown give an allowance of 1.0mm around the handle escutcheon.

Note: Studs are factory installed in horizontal direction both on the line and load sides.

Flush-mounted

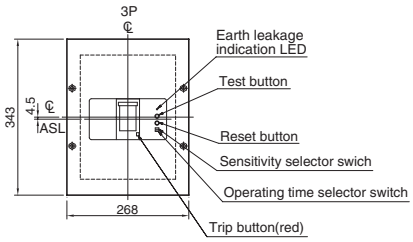

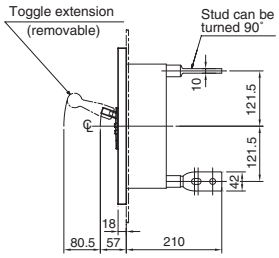

Drilling plan (front view)

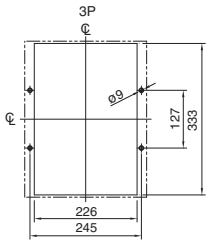

Note: Studs are factory installed in horizontal direction both on the line and load sides.

Control circuit

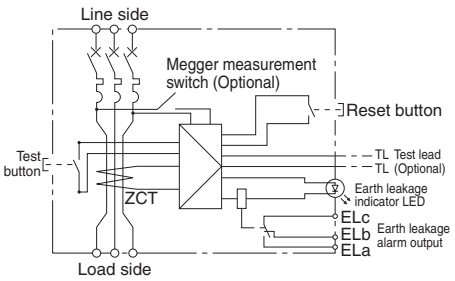

7 Characteristics and Outline Dimensions

Circuit Breaker with earth leakage alarm for distribution boards and control boards

TB50KSL

Ratings and Specifications

Frame size (A)			50			
Type			**TB50KSL**			
Number of poles			2			
■ Ratings						
Rated current, A			15 50			
Calibrated at 40°C			20			
			30			
			40			
Rated operational voltage V			100-240 common			
Applicable range V			80 – 264			
■ Rated breaking capacity, kA						
JIS C 8201-2-1 Ann.2	AC	415V	—			
I_{cu}(sym)		200V	5 (240V)			
		100/200V	—			
		100V	5			
■ Earth leakage alarm specifications						
Earth leakage detection (Current operation type)			Electronic			
Instantaneous tripping type	Rated sensitivity current mA		30/100 selectable			
	Max. operating time sec		0.1			
Earth leakage alarm output contact configuration			— ㊱			
Alarm reset function (manual reset) ㊴			Push button			
Weight (◉ marked standard type) kg			0.3			
■ Connections and Mountings						
Front-connected (FC)	Terminal screws		◉ ㊺			
Rear-connected (RC)			—			
Flush-mounted (FP)			—			
DIN rail mount			○ ㊷			
Clip-in chassis mount			◉			
■ Accessories (optional)		**Symbol**				
Externally mounted	Toggle holder	H H	●			
	Toggle lock	H L	—			
	Terminal cover For front-connected	C F	●			
	Terminal block for lead	T F	●			
CE marking			Non			
Overcurrent trip mechanism			Hydraulic-magnetic type			
Earth leakage indication			LED (Red)			
Colour of cover			Grey			
Trip button (Colour)			Yes (Red)			
Reverse connection			Non			

Notes:

◉ : Standard. This configuration used unless otherwise specified.

○ : Optional standard. Specify when ordering. ● : "yes" or "available". — : "no" or "not available".

㊱ : The earth leakage alarm of TB50KSL type is LED indication only.

㊴ : An earth leakage alarm maintains the operating state until pressing the reset button or turning the main circuit power OFF. If the electric leakage continues, it will be reset while you hold down the reset button, but when you release the reset button, it will return to the operating state.

㊺ : A wire clamping terminal is provided.

㊷ : Please order the DIN rail mounting bracket separately. (Order type: 50EE-RAIL, 1 set per unit)

Time/Current characteristic curves

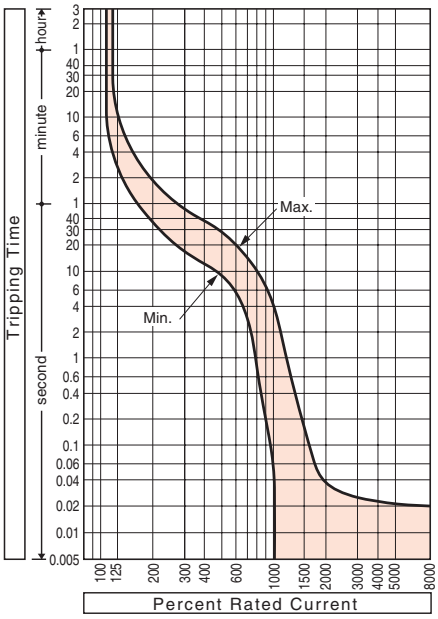

Ambient Compensating Curves

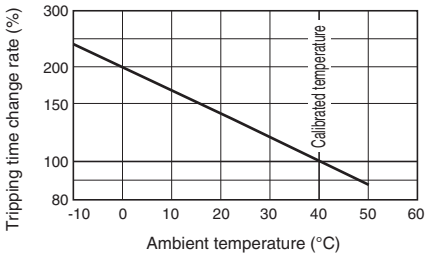

Earth leakage trip characteristic

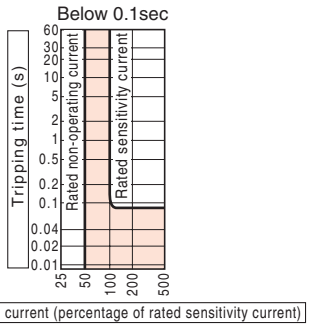

Combinations of Internally Mounted Accessories (Optional)

Poles	AX Auxiliary switch	AL Alarm switch	MG Megger measurement switch	AX AL	MG AL
2					

Toggle — Left pole / Right pole

Note: If the Megger test switch is mounted, the auxiliary switch cannot be mounted.

Outline dimensions (mm) TB50KSL

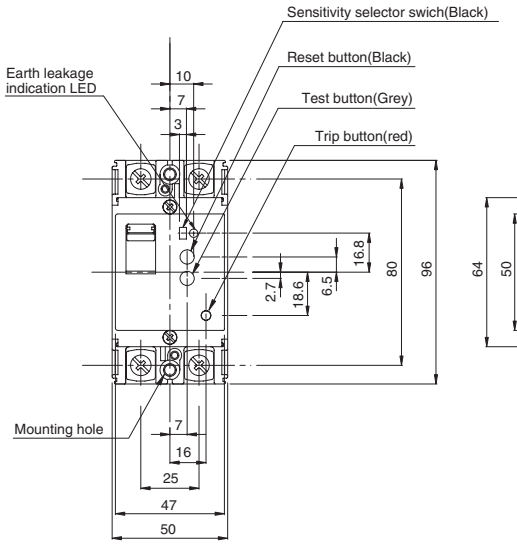

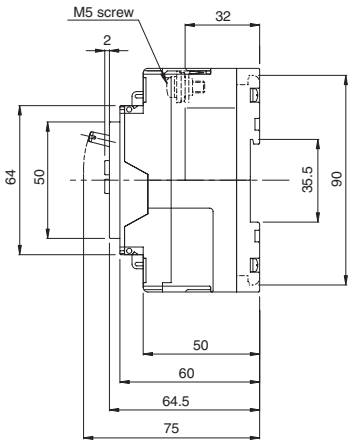

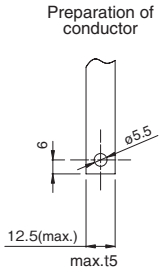

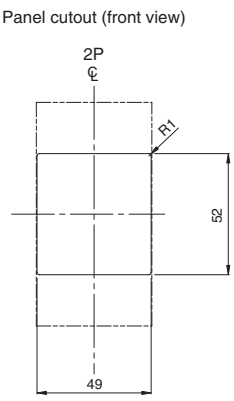

Panel cutout dimensions shown give an allowance of 1.0mm around the handle escutcheon.

Drilling plan

Screw mounting

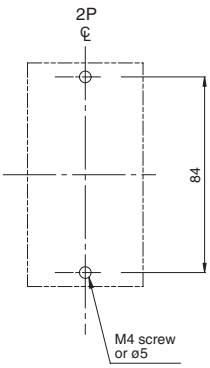

Clip-in Chassis, part number TDB-50SG (optional)
(12-pieces snap-off chassis)

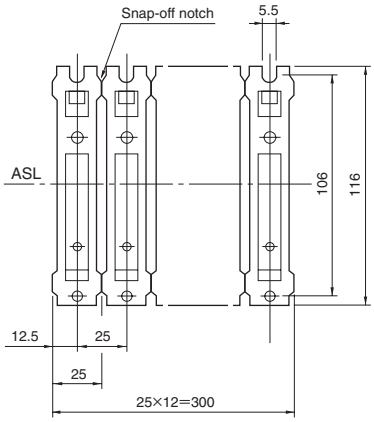

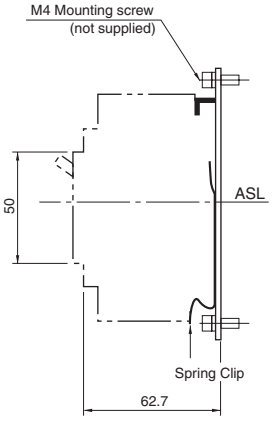

NOTE: 1.Clip-in chassis is notched between every two pieces to adjust number of pieces to number of breaker poles. (Bend once or twice to snap off.)

2.Screw clip-in chassis down at 4 or 5 pole intervals.

Control circuit

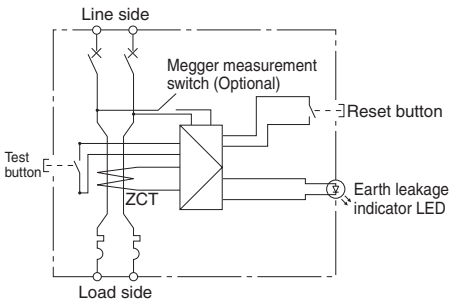

7 Characteristics and Outline Dimensions

Circuit Breaker with earth leakage alarm for distribution boards and control boards

TB50KSZ, TB100KSZ

Ratings and Specifications

Frame size (A)		50	100	
Type		**TB50KSZ**	**TB100KSZ**	
Number of poles ⑭⑮		3	3	
■ Ratings				
Rated current, A		15 50	60	
Calibrated at 40°C		20	75	
		30	100	
		40		
Rated operational voltage V		200-415 common	200-415 common	
Applicable range V		160–484	160–484	
■ Rated breaking capacity, kA				
JIS C 8201-2-1 Ann.2 AC	415V	2.5	2.5	
I_{cu}(sym)	200V	5	5	
	100/200V	5	5	
	100V	—	—	
■ Earth leakage alarm specifications				
Earth leakage detection (Current operation type)		Electronic	Electronic	
Rated sensitivity current mA		30/100/500 selectable	30/100/500 selectable	
Max. operating time sec		0.1	0.1	
Earth leakage alarm output contact configuration ㉚		1c	1c	
Alarm reset function (manual reset) ㊴		Push button ㉞	Push button ㉞	
Weight (◉ marked standard type) kg		0.5	0.6	
■ Connections and Mountings				
Front-connected (FC) Terminal screws		◉ ㊺	◉	
Rear-connected (RC)		—	—	
Flush-mounted (FP)		—	—	
DIN rail mount		○ ㊷	○ ㊷	
Clip-in chassis mount		◉	◉	
■ Accessories (optional)	**Symbol**			
Externally mounted: Toggle holder	H H	●	●	
Externally mounted: Toggle lock	H L	—	—	
Externally mounted: Terminal cover For front-connected	C F	●	●	
Externally mounted: Terminal block for lead	T F	●	●	
CE marking		Non	Non	
Overcurrent trip mechanism		Hydraulic-magnetic type	Hydraulic-magnetic type	
Earth leakage indication		LED (Red)	LED (Red)	
Colour of cover		Grey	Grey	
Trip button (Colour)		Yes (Red)	Yes (Red)	
Reverse connection		Non	Non	

Notes:

◉ : Standard. This configuration used unless otherwise specified.
○ : Optional standard. Specify when ordering. ● : "yes" or "available". — : "no" or "not available".
⑭ : When applying 3-pole type to a 1ø2W circuit, use both ends and do not use the central pole.
⑮ : When applying 3-pole type to a 1ø3W circuit, apply voltage to both ends and connect the neutral wire to the central pole.
㉚ : See page 6-22 for the contact rating.
㉞ : Optional lead wire draw-in for remote reset available on request. Please specify "with MRA" when ordering. The external switch should be a self-resetting a-contact (NO) switch (for 24V DC 10mA microload circuit), and do not apply voltage.
㊴ : An earth leakage alarm maintains the operating state until pressing the reset button or turning the main circuit power OFF. If the electric leakage continues, it will be reset while you hold down the reset button, but when you release the reset button, it will return to the operating state.
㊺ : A wire clamping terminal is provided.
㊷ : Please order the DIN rail mounting bracket separately. (Order type: 50EE-RAIL, 1 set per unit)

Time/Current characteristic curves

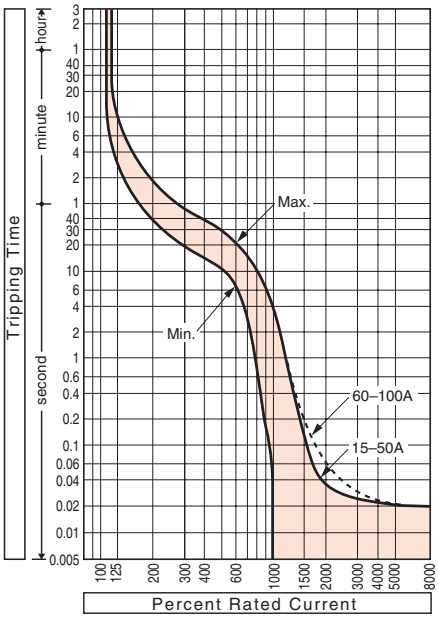

Ambient Compensating Curves

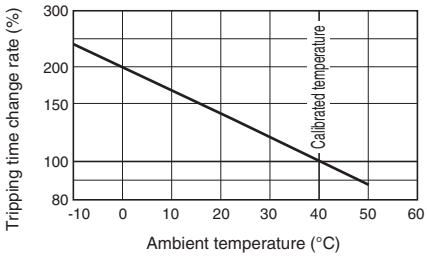

Earth leakage trip characteristic

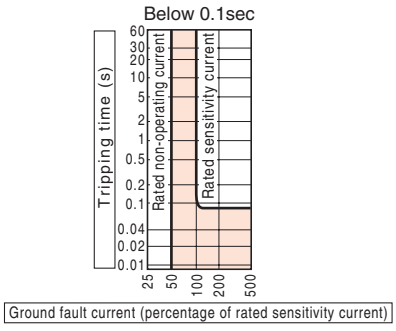

Combinations of Internally Mounted Accessories (Optional)

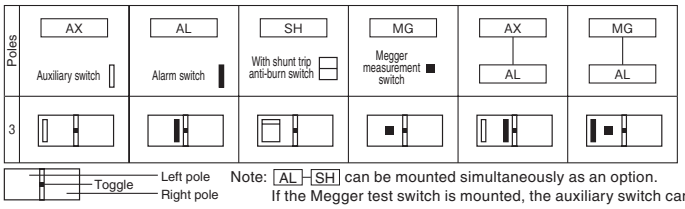

Note: AL–SH can be mounted simultaneously as an option.
If the Megger test switch is mounted, the auxiliary switch cannot be mounted.

Outline dimensions (mm) TB50KSZ, TB100KSZ

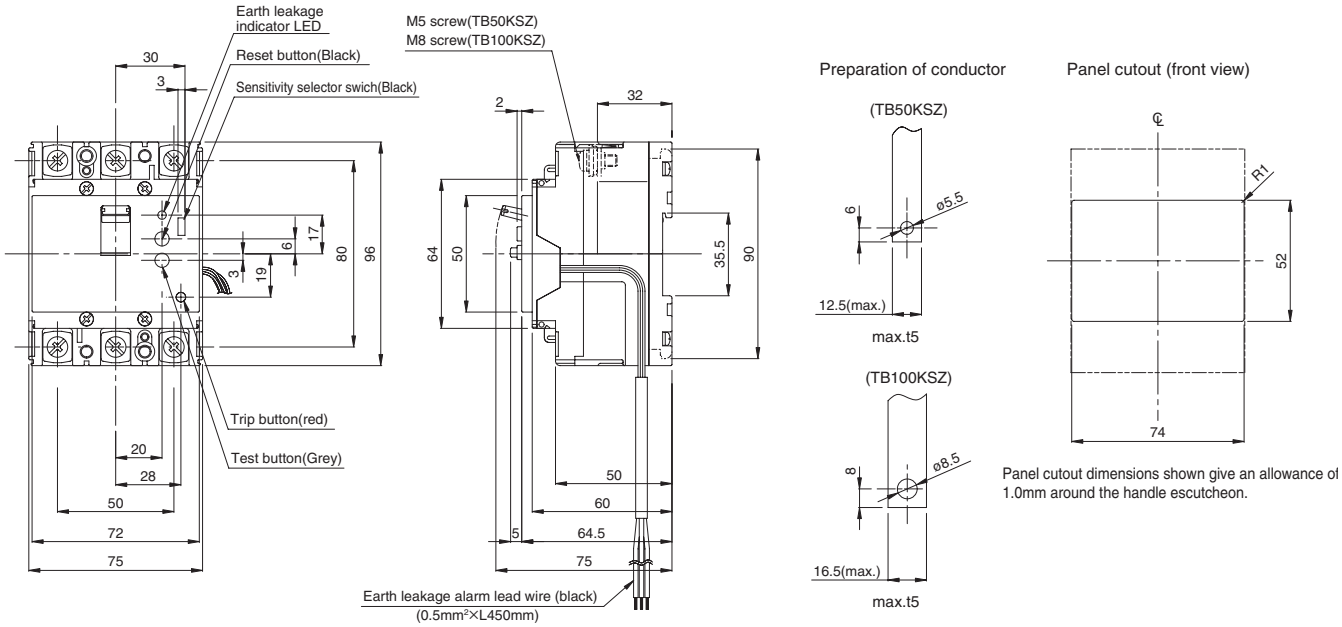

Drilling plan

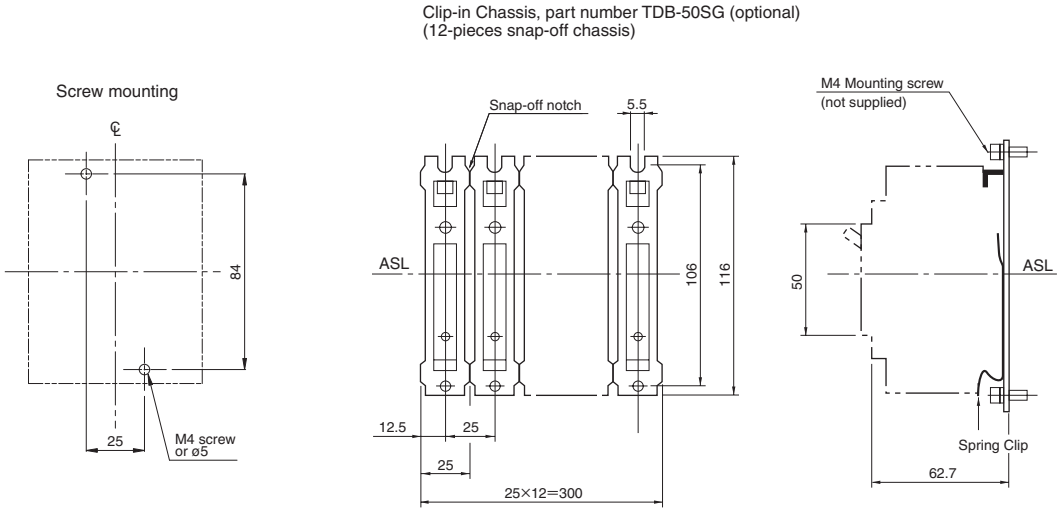

NOTE: 1.Clip-in chassis is notched between every two pieces to adjust number of pieces to number of breaker poles. (Bend once or twice to snap off.)

2.Screw clip-in chassis down at 4 or 5 pole intervals.

Control circuit

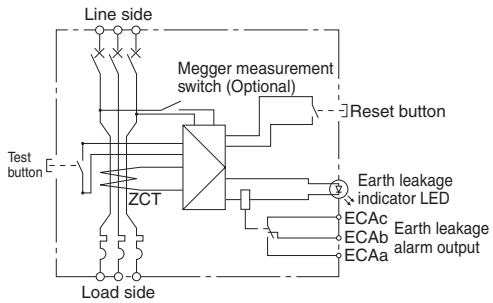

7 Characteristics and Outline Dimensions TemBreak PRO

Single phase 3-wire circuit breakers with neutral phase open protection and earth leakage alarm

NAE125-SF, NAS125-SF

Ratings and Specifications

Frame size (A)		100	125	100	125
Type		NAE125-SF		NAS125-SF	
Number of poles / Elements		3P3E ⑩	3P3E ⑩	3P3E ⑩	3P3E ⑩
Phase and wires		1ø3W	1ø3W	1ø3W	1ø3W
■ Ratings					
Rated current, A		15 50	125	15 50	125
Calibrated at 40° C		20 60		20 60	
		30 75		30 75	
		40 100		40 100	
Rated operational voltage AC V		100/200	100/200	100/200	100/200
Rated impulse withstand voltage〔U_{imp}〕 kV		8	8	8	8
Single 3-phase neutral wire open phase protection characteristics	Rated operating overvoltage AC V	135	135	135	135
	Rated non-operating overvoltage AC V	120	120	120	120
	Rated overvoltage operating time (sec)	1 or less	1 or less	1 or less	1 or less
■ Rated breaking capacity, kA					
JIS C 8201-2-1 Ann.2 I_{cu} (sym) AC 100/200V		35	35	50	50
Weight (◉ marked standard type) kg		1.15	1.15	1.15	1.15
■ Earth leakage alarm specifications					
Earth leakage detection (Current operation type)		Electronic	Electronic	Electronic	Electronic
Rated sensitivity current mA		30/100/500 selectable	30/100/500 selectable	30/100/500 selectable	30/100/500 selectable
		100/200/500 selectable	100/200/500 selectable	100/200/500 selectable	100/200/500 selectable
Max. operating time sec		0.1/0.45/1.0 selectable	0.1/0.45/1.0 selectable	0.1/0.45/1.0 selectable	0.1/0.45/1.0 selectable
Earth leakage alarm output contact configuration ㉚		1c	1c	1c	1c
Alarm reset function (manual reset) ㊴		Push button ⑧	Push button ⑧	Push button ⑧	Push button ⑧
Earth leakage indication		LED (Red)	LED (Red)	LED (Red)	LED (Red)
■ Connections and Mountings					
Front-connected (FC)	Terminal screws	◉ ④	◉	◉ ④	◉
	With extension bars	○ ㊸	○ ㊸	○ ㊸	○ ㊸
Rear-connected (RC)	Flat bar studs	△	△	△	△
■ Accessories (optional)	Symbol				
Externally mounted: Motor operator	M C	—	—	—	—
External operating handle: Breaker-mounted	H B	●	●	●	●
External operating handle: Door-mounted (variable depth)	H P	●	●	●	●
Toggle extension	H A	—	—	—	—
Mechanical interlock: Slide type	M S	—	—	—	—
Mechanical interlock: Link type	M L	—	—	—	—
Mechanical interlock: Wire type	M W	—	—	—	—
Toggle holder	H H	●	●	●	●
Toggle lock	H L	●	●	●	●
Terminal cover: For front-connected	C F	●	●	●	●
Terminal cover: For rear-connected	C R	●	●	●	●
Terminal block for lead	T F	●	●	●	●
Door flange	D F	—	—	—	—
CE marking		Non	Non	Non	Non
Overcurrent trip mechanism		Thermal-magnetic	Thermal-magnetic	Thermal-magnetic	Thermal-magnetic
Colour of cover		Grey Blue	Grey Blue	Grey Blue	Grey Blue
Trip button (Colour)		Yes (Red)	Yes (Red)	Yes (Red)	Yes (Red)
Suitability for isolation		Yes	Yes	Yes	Yes
Reverse power flow circuit		Yes ㉕	Yes ㉕	Yes ㉕	Yes ㉕

Notes:

◉ : Standard. This configuration used unless otherwise specified.
○ : Optional standard. Specify when ordering.
● : "yes" or "available". — : "no" or "not available". △ : Custom-built product. Please contact us for details.
④ : 50A or less is the M5 wire clamping terminal.
⑧ : Optional remote reset or automatic reset available on request. Please apply this when the reset button cannot be pressed due to the installation of external accessories, etc. See page 6-27 for details.
⑩ : They can also be applied to circuits where overcurrent flows in the neutral wire.
㉚ : See page 6-22 for the contact rating.
㊴ : Distribution board branch conductors and busbar conductor supports are available. (Optional)An earth leakage alarm maintains the operating state until pressing the reset button or turning the main circuit power OFF. If the electric leakage continues, it will be reset while you hold down the reset button, but when you release the reset button, it will return to the operating state.
㊸ : For the extension bars, please place the order separately in parts.
㉕ : Since the overvoltage and earth leakage detection circuit has a continuous rating specification, there is no need to turn off the power of the detection circuit using a megger test switch, etc.

Time/Current characteristic curves

15-50A

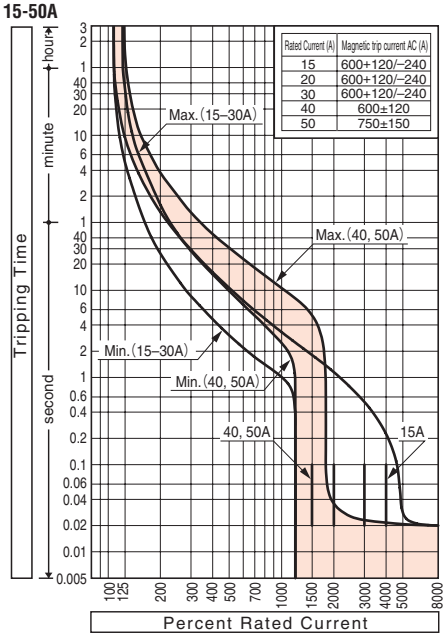

60-125A

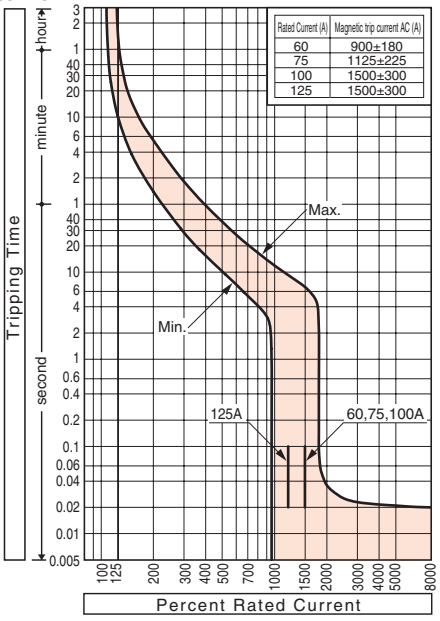

Ambient Compensating Curves

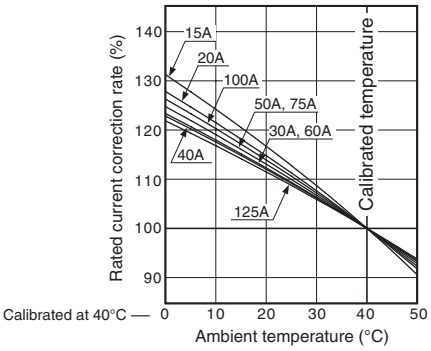

Combinations of Internally Mounted Accessories (Optional)

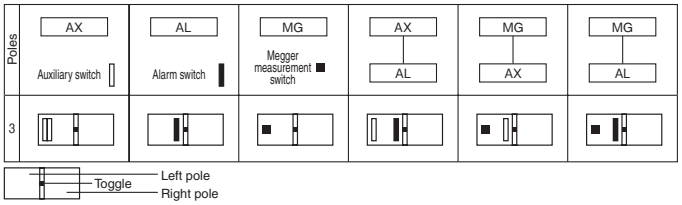

Outline dimensions (mm)

NAE125-SF, NAS125-SF

Front-connected

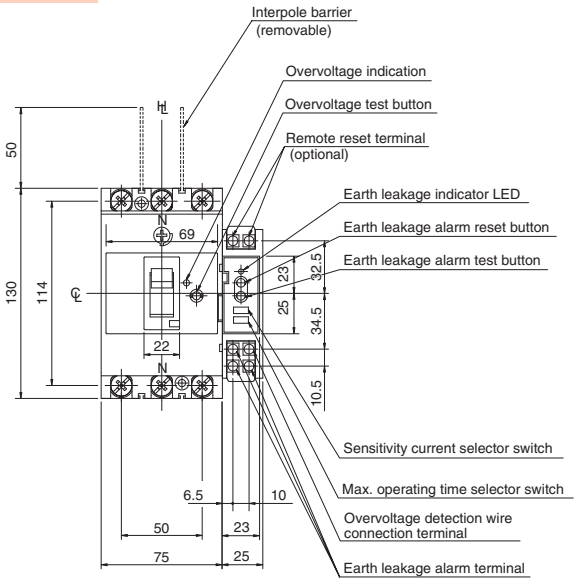

Preparation of conductor

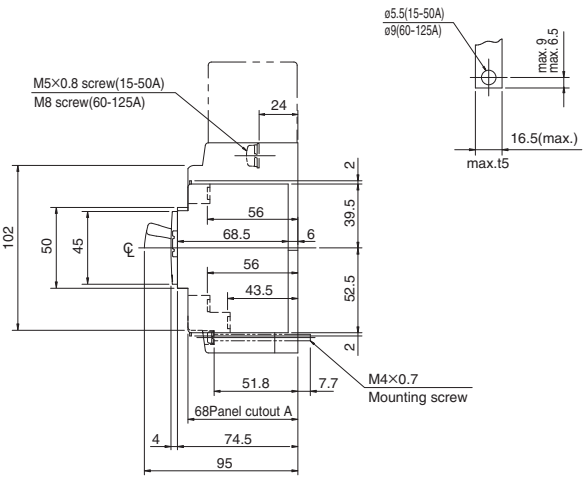

Note 1) Side unit terminal screws M3.5
2) Tightening torque of M3.5 terminal screws: 0.9 to 1.2Nm
3) Connectable wire: 2.0mm² (max.)
4) Overvoltage detection terminal block connection length: 30m (max.)

Drilling plan (front view)

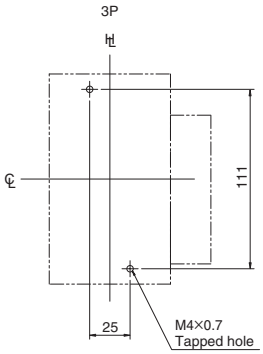

Panel cutout A (front view)

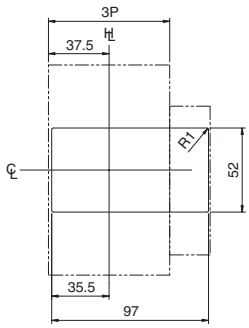

Panel cutout dimensions shown give an allowance of 1.0mm around the handle escutcheon.

Single phase 3-wire circuit breakers with neutral phase open protection characteristics

The operating voltage of the single phase 3-wire circuit breakers with neutral phase open protection is set at more than 120V and less than 135V. If there is an abnormal voltage above 135V due to neutral wire open phase, the circuit breaker will reliably trip within 1 second.

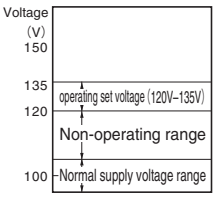

Earth leakage trip characteristic

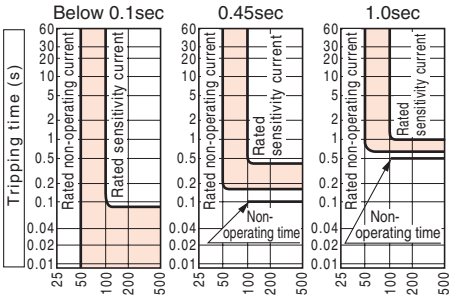

Time delay tripping type will operate on 0.15-0.45sec for 0.45sec, 0.6-1.0sec for 1.0sec.

Control circuit

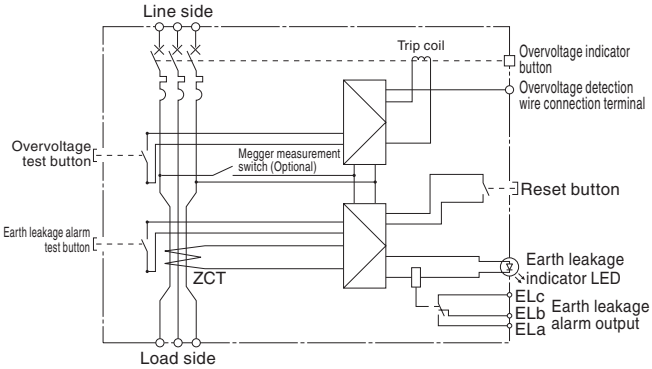

7 Characteristics and Outline Dimensions TemBreak PRO

Single phase 3-wire circuit breakers with neutral phase open protection and earth leakage alarm

NAE250-SF, NAS250-SF

Ratings and Specifications

Frame size (A)	225	250	225	250
Type	NAE250-SF		NAS250-SF	
Number of poles / Elements	3P3E ⑩	3P3E ⑩	3P3E ⑩	3P3E ⑩
Phase and wires	1ø3W	1ø3W	1ø3W	1ø3W
■ Ratings				
Rated current, A	125 225	250	125 225	250
Calibrated at 40° C	150		150	
	175		175	
	200		200	
Rated operational voltage AC V	100/200	100/200	100/200	100/200
Rated impulse withstand voltage〔U_{imp}〕 kV	8	8	8	8
Single 3-phase neutral wire open phase protection characteristics: Rated operating overvoltage AC V	135	135	135	135
Rated non-operating overvoltage AC V	120	120	120	120
Rated overvoltage operating time (sec)	1 or less	1 or less	1 or less	1 or less
■ Rated breaking capacity, kA				
JIS C 8201-2-1 Ann.2 I_{cu} (sym) AC 100/200V	35	35	85	85
Weight (◉ marked standard type) kg	1.8	1.8	1.8	1.8
■ Earth leakage alarm specifications				
Earth leakage detection (Current operation type)	Electronic	Electronic	Electronic	Electronic
Rated sensitivity current mA	30/100/500 selectable	30/100/500 selectable	30/100/500 selectable	30/100/500 selectable
	100/200/500 selectable	100/200/500 selectable	100/200/500 selectable	100/200/500 selectable
Max. operating time sec	0.1/0.45/1.0 selectable	0.1/0.45/1.0 selectable	0.1/0.45/1.0 selectable	0.1/0.45/1.0 selectable
Earth leakage alarm output contact configuration ㉚	1c	1c	1c	1c
Alarm reset function (manual reset) ㊴	Push button ⑧	Push button ⑧	Push button ⑧	Push button ⑧
Earth leakage indication	LED (Red)	LED (Red)	LED (Red)	LED (Red)
■ Connections and Mountings				
Front-connected (FC) Terminal screws	◉	◉	◉	◉
With extension bars	○ ㊸	○ ㊸	○ ㊸	○ ㊸
Rear-connected (RC) Flat bar studs	△	△	△	△
■ Accessories (optional) Symbol				
Externally mounted: Motor operator M C	●	●	●	●
External operating handle: Breaker-mounted H B	●	●	●	●
Door-mounted (variable depth) H P	●	●	●	●
Toggle extension H A	—	—	—	—
Mechanical interlock: Slide type M S	—	—	—	—
Link type M L	—	—	—	—
Wire type MW	—	—	—	—
Toggle holder H H	●	●	●	●
Toggle lock H L	●	●	●	●
Terminal cover: For front-connected C F	●	●	●	●
For rear-connected C R	●	●	●	●
Terminal block for lead T F	●	●	●	●
Door flange D F	—	—	—	—
CE marking	Non	Non	Non	Non
Overcurrent trip mechanism	Thermal-magnetic	Thermal-magnetic	Thermal-magnetic	Thermal-magnetic
Colour of cover	Grey Blue	Grey Blue	Grey Blue	Grey Blue
Trip button (Colour)	Yes (Red)	Yes (Red)	Yes (Red)	Yes (Red)
Suitability for isolation	Yes	Yes	Yes	Yes
Reverse power flow circuit	Yes ㉕	Yes ㉕	Yes ㉕	Yes ㉕

Notes:

◉ : Standard. This configuration used unless otherwise specified.
○ : Optional standard. Specify when ordering.
● : "yes" or "available". — : "no" or "not available". △ : Custom-built product. Please contact us for details.
⑧ : Optional remote reset or automatic reset available on request. Please apply this when the reset button cannot be pressed due to the installation of external accessories, etc. See page 6-27 for details.
⑩ : They can also be applied to circuits where overcurrent flows in the neutral wire.
㉚ : See page 6-22 for the contact rating.
㊴ : An earth leakage alarm maintains the operating state until pressing the reset button or turning the main circuit power OFF. If the electric leakage continues, it will be reset while you hold down the reset button, but when you release the reset button, it will return to the operating state.
㊸ : For the extension bars, please place the order separately in parts.
㉕ : Since the overvoltage and earth leakage detection circuit has a continuous rating specification, there is no need to turn off the power of the detection circuit using a megger test switch, etc.

Time/Current characteristic curves

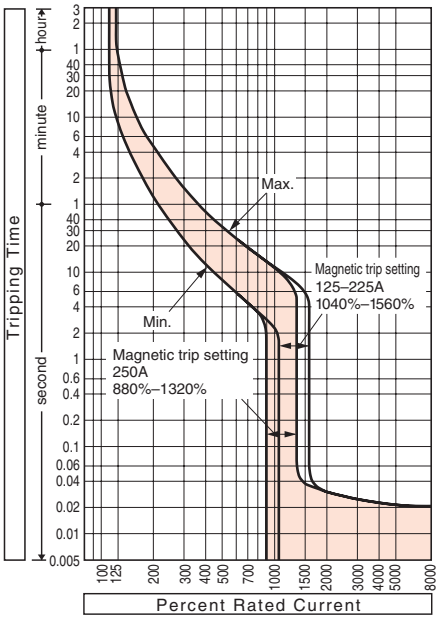

Ambient Compensating Curves

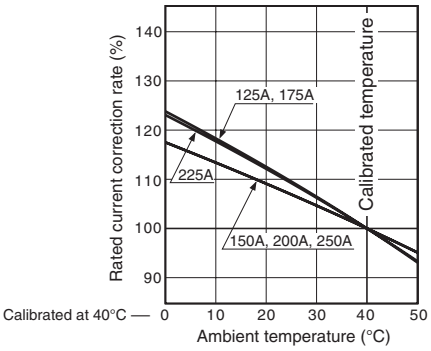

Earth leakage trip characteristic

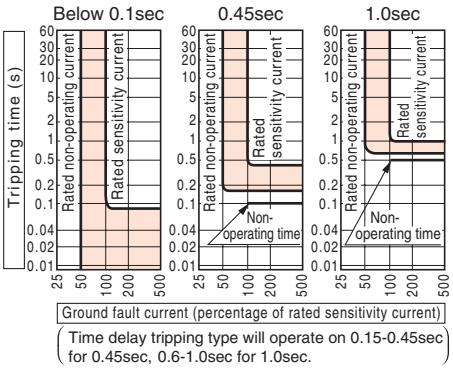

Combinations of Internally Mounted Accessories (Optional)

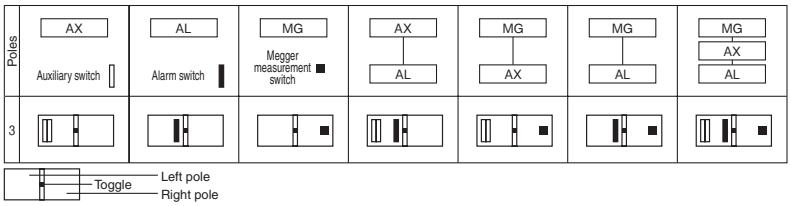

Outline dimensions (mm) NAE250-SF, NAS250-SF

Front-connected

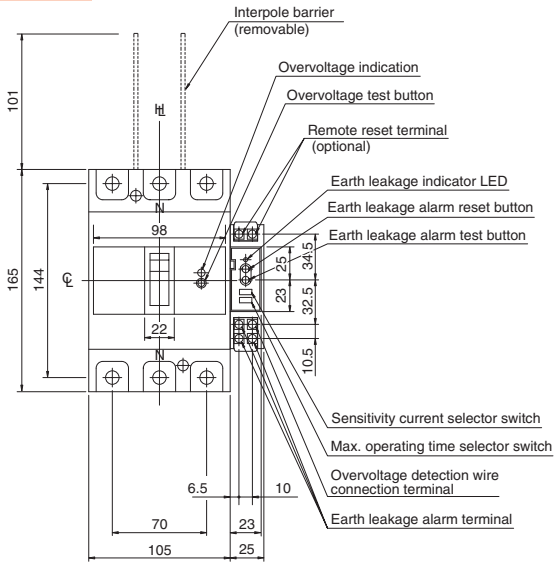

Preparation of conductor

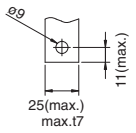

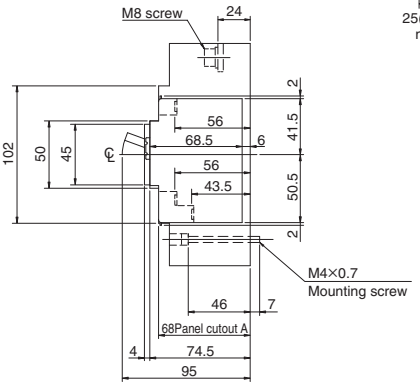

Note 1) Side unit terminal screws M3.5
2) Tightening torque of M3.5 terminal screws: 0.9 to 1.2Nm
3) Connectable wire: 2.0mm² (max.)
4) Overvoltage detection terminal block connection length: 30m (max.)

Drilling plan (front view)

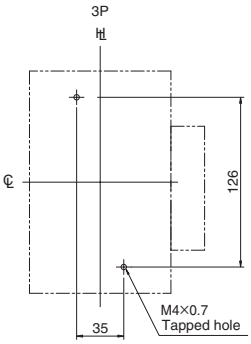

Panel cutout A (front view)

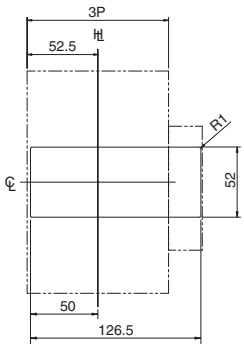

Panel cutout dimensions shown give an allowance of 1.0mm around the handle escutcheon.

Single phase 3-wire circuit breakers with neutral phase open protection characteristics

The operating voltage of the single phase 3-wire circuit breakers with neutral phase open protection is set at more than 120V and less than 135V. If there is an abnormal voltage above 135V due to neutral wire open phase, the circuit breaker will reliably trip within 1 second.

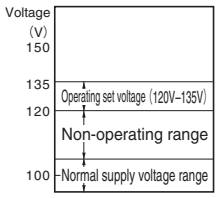

Control circuit

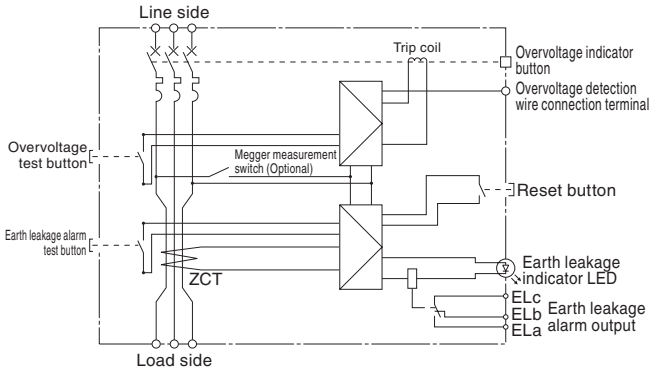

7 Characteristics and Outline Dimensions TemBreak PRO

Single phase 3-wire circuit breakers with neutral phase open protection and earth leakage alarm

NAE400-NF, NAS400-NF

Ratings and Specifications

Frame size (A)		400	400
Type		**NAE400-NF**	**NAS400-NF**
Number of poles / Elements		3P2E ⑱	3P2E ⑱
Phase and wires		1ø3W	1ø3W
■ Ratings			
Rated current, A		250	250
Calibrated at 40° C		300	300
		350	350
		400	400
Rated operational voltage AC V		100/200	100/200
Rated impulse withstand voltage〔U_{imp}〕 kV		8	8
Single 3-phase neutral wire open phase protection characteristics	Rated operating overvoltage AC V	135	135
	Rated non-operating overvoltage AC V	120	120
	Rated overvoltage operating time (sec)	1 or less	1 or less
■ Rated breaking capacity, kA			
JIS C 8201-2-1 Ann.2 I_{cu} (sym) AC 100/200V		35	85
Weight (◉ marked standard type) kg		4.9	4.9
■ Earth leakage alarm specifications			
Earth leakage detection (Current operation type)		Electronic	Electronic
Rated sensitivity current mA		30/100/500 selectable	30/100/500 selectable
		100/200/500 selectable	100/200/500 selectable
Max. operating time sec		0.1/0.45/1.0 selectable	0.1/0.45/1.0 selectable
Earth leakage alarm output contact configuration ㉚		1c	1c
Alarm reset function (manual reset) ㊴		Push button ⑧	Push button ⑧
Earth leakage indication		LED (Red)	LED (Red)
■ Connections and Mountings			
Front-connected (FC)	Terminal screws	◉	◉
	With extension bars	○	○
Rear-connected (RC)	Flat bar studs	△	△
■ Accessories (optional)	Symbol		
Externally mounted: Motor operator	M C	●	●
External operating handle	Breaker-mounted H B	●	●
	Door-mounted (variable depth) H P	●	●
Toggle extension	H A	●	●
Mechanical interlock	Slide type M S	—	—
	Link type M L	—	—
	Wire type MW	—	—
Toggle holder	H H	●	●
Toggle lock	H L		
Terminal cover	For front-connected C F	●	●
	For rear-connected C R	●	●
Terminal block for lead	T F	●	●
Door flange	D F	—	—
CE marking		Non	Non
Overcurrent trip mechanism		Thermal-magnetic	Thermal-magnetic (adjustable)
Colour of cover		Grey Blue	Grey Blue
Trip button (Colour)		Yes (Red)	Yes (Red)
Suitability for isolation		Yes	Yes
Reverse power flow circuit		Yes ㉕	Yes ㉕

Notes:

◉ : Standard. This configuration used unless otherwise specified.
○ : Optional standard. Specify when ordering.
● : "yes" or "available". — : "no" or "not available". △ : Custom-built product. Please contact us for details.
⑧ : Optional remote reset or automatic reset available on request. Please apply this when the reset button cannot be pressed due to the installation of external accessories, etc. See page 6-27 for details.
⑱ : Do not apply to circuits where overcurrent flows in the neutral wire.
㉚ : See page 6-22 for the contact rating.
㊴ : An earth leakage alarm maintains the operating state until pressing the reset button or turning the main circuit power OFF. If the electric leakage continues, it will be reset while you hold down the reset button, but when you release the reset button, it will return to the operating state.
㉕ : Since the overvoltage and earth leakage detection circuit has a continuous rating specification, there is no need to turn off the power of the detection circuit using a megger test switch, etc.

Time/Current characteristic curves NAS400-NF

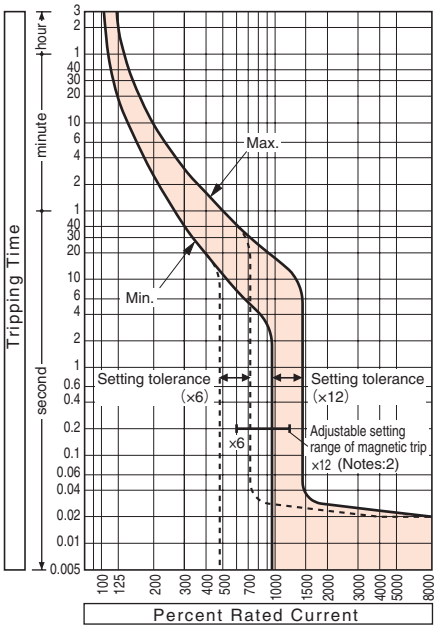

Ambient Compensating Curves

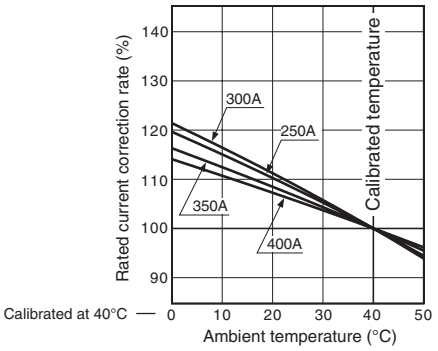

Magnetic trip pick-up current

Rated current (A) I_n×	Magnetic trip pick-up current (adjustable range) (A) 12	11	10	9	8	7	6
250	3000	2750	2500	2250	2000	1750	1500
300	3600	3300	3000	2700	2400	2100	1800
350	4200	3850	3500	3150	2800	2450	2100
400	4800	4400	4000	3600	3200	2800	2400

Notes (1) : Setting tolerance: ±20%.
(2) : **NAE400-NF** type is a single point fixed setting of 10 times the rated current. Setting tolerance: ±10%.
(3) : The Time/Current characteristic curve is for adjustable instantaneous trip.

Remark (1) : If the model is adjustable and unless otherwise stated when ordering, the scale is factory set to ×12.

Earth leakage trip characteristic

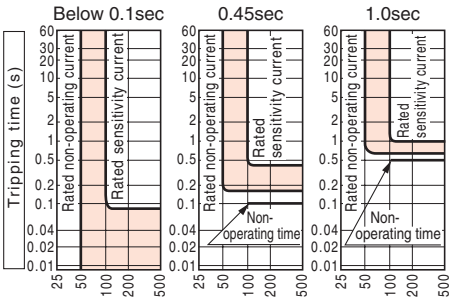

(Time delay tripping type will operate on 0.15-0.45sec for 0.45sec, 0.6-1.0sec for 1.0sec.)

Combinations of Internally Mounted Accessories (Optional)

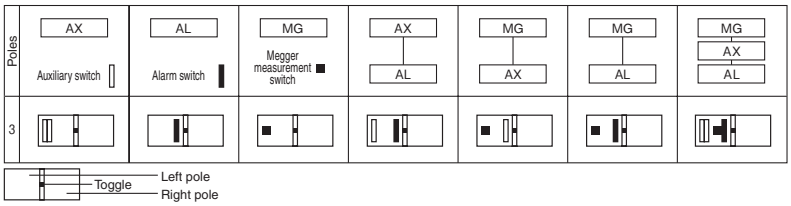

Outline dimensions (mm) — NAE400-NF, NAS400-NF

Front-connected

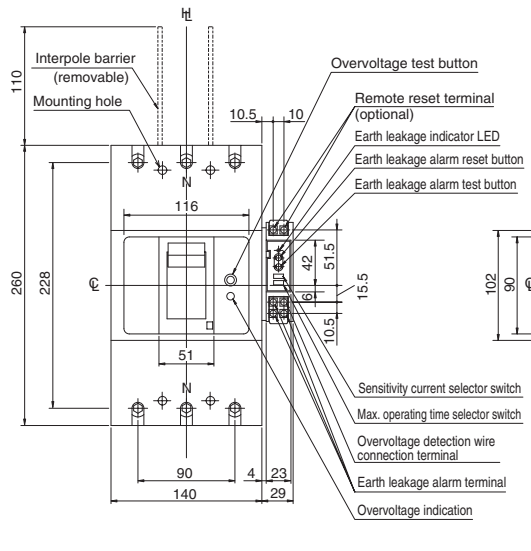

Preparation of conductor

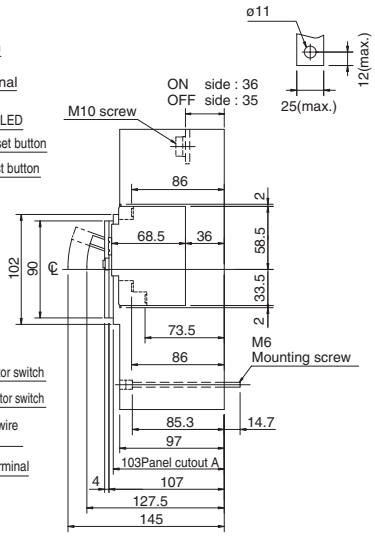

With extension bars (optional)

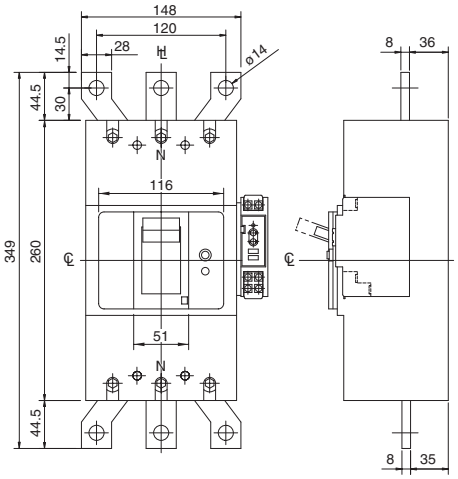

Note 1) Side unit terminal screws M3.5
2) Tightening torque of M3.5 terminal screws: 0.9 to 1.2Nm
3) Connectable wire: 2.0mm² (max.)
4) Overvoltage detection terminal block connection length: 30m (max.)

Drilling plan (front view)

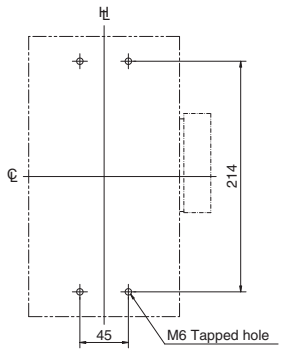

Panel cutout A (front view)

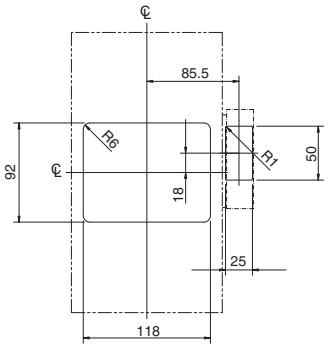

Panel cutout dimensions shown give an allowance of 1.0mm around the handle escutcheon.

Single phase 3-wire circuit breakers with neutral phase open protection characteristics

The operating voltage of the single phase 3-wire circuit breakers with neutral phase open protection is set at more than 120V and less than 135V. If there is an abnormal voltage above 135V due to neutral wire open phase, the circuit breaker will reliably trip within 1 second.

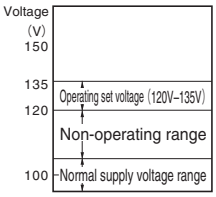

Control circuit

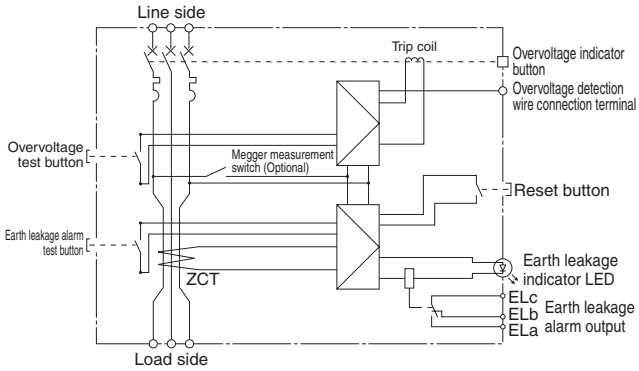

Time/Current characteristic curves — NAE400-NF

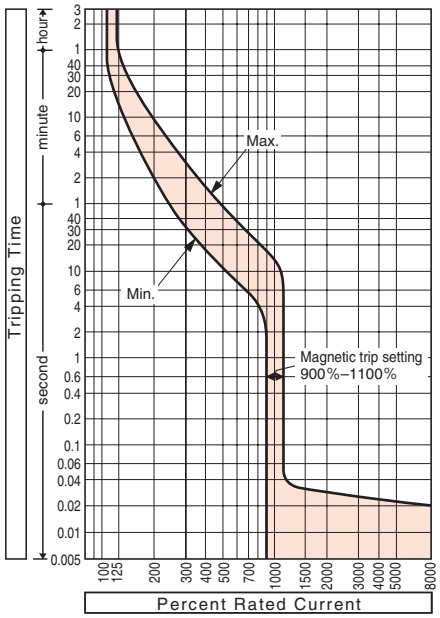

7 Characteristics and Outline Dimensions TemBreak PRO

Single phase 3-wire circuit breakers with neutral phase open protection

PE50-NFN, PE125-NFN

Ratings and Specifications

Frame size (A)		50	100	125	
Type		**PE50-NFN**	**PE125-NFN**		
Number of poles / Elements		3P3E ⑩	3P3E ⑩	3P3E ⑩	
Phase and wires		1ø3W	1ø3W	1ø3W	
■ Ratings					
Rated current, A		15	60	125	
Calibrated at 40° C		20	75		
		30	100		
		40			
		50			
Rated operational voltage AC V		100/200	100/200	100/200	
Rated impulse withstand voltage〔U_{imp}〕 kV		6	6	6	
Single 3-phase neutral wire open phase protection characteristics	Rated operating overvoltage AC V	135	135	135	
	Rated non-operating overvoltage AC V	120	120	120	
	Rated overvoltage operating time (sec)	1 or less	1 or less	1 or less	
■ Rated breaking capacity, kA					
JIS C 8201-2-1 Ann.2 I_{cu} (sym) AC 100/200V		10	25	25	
Weight (◉ marked standard type) kg		0.8	0.8	0.8	
■ Connections and Mountings					
Front-connected (FC)	Terminal screws	◉ ㊺	◉	◉	
	With extension bars	○ ㊸	○ ㊸	○ ㊸	
Rear-connected (RC)	Flat bar studs	△	△	△	
DIN rail mount		○ ⑪	○ ⑪	○ ⑪	
■ Accessories (optional)		Symbol			
Externally mounted: Motor operator		M C	—	—	—
External operating handle	Breaker-mounted	H B	●	●	●
	Door-mounted (variable depth)	H P	●	●	●
Toggle extension		H A	—	—	—
Mechanical interlock	Slide type	M S	●	●	●
	Link type	M L	—	—	—
	Wire type	MW	—	—	—
Toggle holder		H H	●	●	●
Toggle lock		H L	●	●	●
Terminal cover	For front-connected	C F	●	●	●
	For rear-connected	C R	●	●	●
Terminal block for lead		T F	●	●	●
Door flange		D F	—	—	—
CE marking			Non	Non	Non
Overcurrent trip mechanism			Thermal-magnetic	Thermal-magnetic	Thermal-magnetic
Overvoltage operation indication function			Mechanical button	Mechanical button	Mechanical button
Colour of cover			Grey Blue	Grey Blue	Grey Blue
Trip button (Colour)			Yes (Red)	Yes (Red)	Yes (Red)
Suitability for isolation			Yes	Yes	Yes
Reverse power flow circuit			Non	Non	Non

Notes:

◉ : Standard. This configuration used unless otherwise specified.
○ : Optional standard. Specify when ordering.
● : "yes" or "available". — : "no" or "not available". △ : Custom-built product. Please contact us for details.
⑩ : They can also be applied to circuits where overcurrent flows in the neutral wire.
⑪ : Please order the DIN rail adapter separately. See page 6-152.
㊺ : A wire clamping terminal is provided.
㊸ : For the extension bars, please place the order separately in parts.

Remarks:

(1): This circuit breaker is designed for single-phase 3-wire 100/200V circuits only.
(2): Connect the neutral wire to the central pole and the voltage lines (200V) to the left and right poles.
(3): Be sure to connect the overvoltage detection lead wire to the OFF side of the circuit breaker. If you connect it to the ON side, voltage will be applied to the OFF side even when the circuit breaker is turned OFF.
(4): Connect the overvoltage detection lead wire to the neutral wire on the load side (OFF side) of the circuit. The circuit breaker will not work unless this connection is made.
(5): Connect the overvoltage detection lead wire to the end of the load side (OFF side) of the circuit.
(6): The test button checks the overvoltage operation.

Time/Current characteristic curves

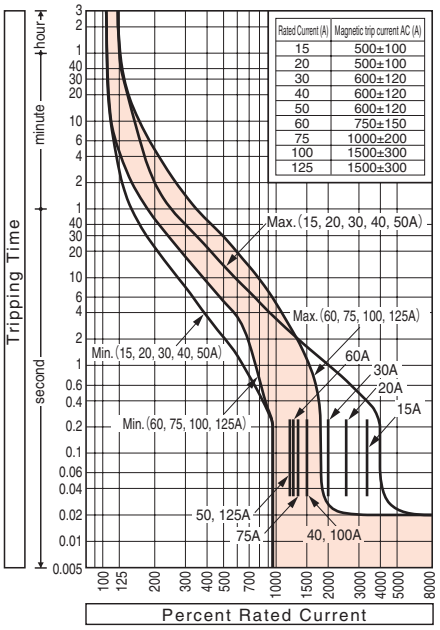

Ambient Compensating Curves

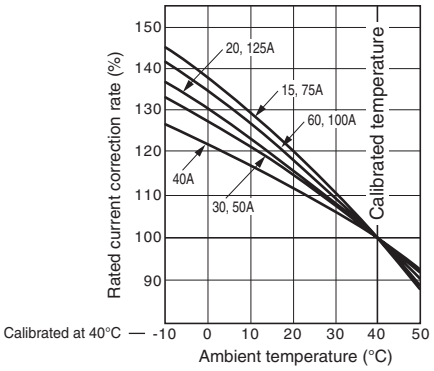

Combinations of Internally Mounted Accessories (Optional)

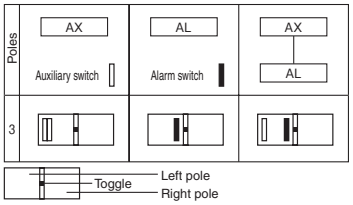

Outline dimensions (mm)

PE50-NFN, PE125-NFN

Front-connected

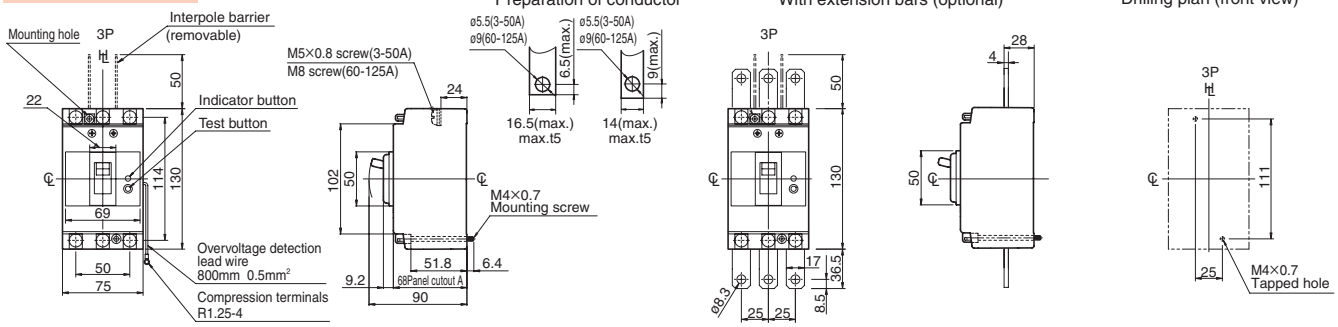

Panel cutout A (front view)

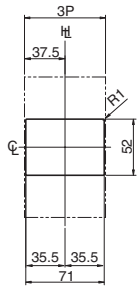

Panel cutout dimensions shown give an allowance of 1.0mm around the handle escutcheon.

Single phase 3-wire circuit breakers with neutral phase open protection characteristics

The operating voltage of the single phase 3-wire circuit breakers with neutral phase open protection is set at more than 120V and less than 135V. If there is an abnormal voltage above 135V due to neutral wire open phase, the circuit breaker will reliably trip within 1 second.

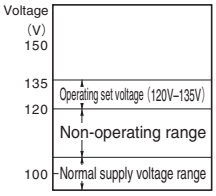

Control circuit

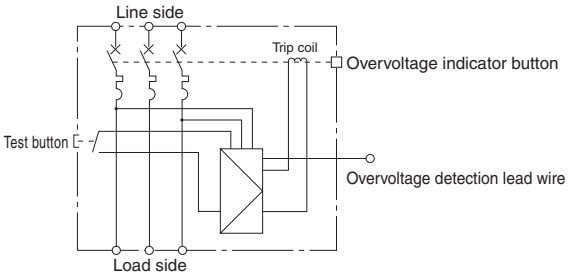

7 Characteristics and Outline Dimensions TemBreak PRO

Single phase 3-wire circuit breakers with neutral phase open protection

NS125-SF

Ratings and Specifications

Frame size (A)			100	125		
Type			NS125-SF			
Number of poles / Elements			3P3E ⑩	3P3E ⑩		
Phase and wires			1ø3W	1ø3W		
■Ratings						
Rated current, A			15 50	125		
Calibrated at 40° C			20 60			
			30 75			
			40 100			
Rated operational voltage AC V			100/200	100/200		
Rated impulse withstand voltage〔U_{imp}〕 kV			8	8		
Single 3-phase neutral wire open phase protection characteristics	Rated operating overvoltage AC V		135	135		
	Rated non-operating overvoltage AC V		120	120		
	Rated overvoltage operating time (sec)		1 or less	1 or less		
■Rated breaking capacity, kA						
JIS C 8201-2-1 Ann.2 I_{cu} (sym)		AC 100/200V	50	50		
Weight (◉ marked standard type) kg			0.95	0.95		
■Connections and Mountings						
Front-connected (FC)	Terminal screws		◉ ④	◉		
	With extension bars		○ ⑤③	○ ⑤③		
Rear-connected (RC)	Flat bar studs		△	△		
DIN rail mount			○ ⑪	○ ⑪		
■Accessories (optional)		Symbol				
Externally mounted: Motor operator		M C	—	—		
External operating handle	Breaker-mounted	H B	●	●		
	Door-mounted (variable depth)	H P	●	●		
Toggle extension		H A	—	—		
Mechanical interlock	Slide type	M S	●	●		
	Link type	M L	—	—		
	Wire type	MW	—	—		
Toggle holder		H H	●	●		
Toggle lock		H L	●	●		
Terminal cover	For front-connected	C F	●	●		
	For rear-connected	C R	●	●		
Terminal block for lead		T F	●	●		
Door flange		D F	—	—		
CE marking			Non	Non		
Overcurrent trip mechanism			Thermal-magnetic	Thermal-magnetic		
Overvoltage operation indication function			Mechanical button	Mechanical button		
Colour of cover			Grey Blue	Grey Blue		
Trip button (Colour)			Yes (Red)	Yes (Red)		
Suitability for isolation			Yes	Yes		
Reverse power flow circuit			Yes ⑭	Yes ⑭		

Notes:

◉ : Standard. This configuration used unless otherwise specified.
○ : Optional standard. Specify when ordering.
● : "yes" or "available". — : "no" or "not available". △ : Custom-built product. Please contact us for details.
④ : 50A or less is the M5 wire clamping terminal.
⑩ : They can also be applied to circuits where overcurrent flows in the neutral wire.
⑪ : Please order the DIN rail adapter separately. See page 6-152.
⑤③ : For the extension bars, please place the order separately in parts.
⑭ : Since the overvoltage detection circuit has a continuous rating specification, there is no need to turn off the power of the detection circuit using a megger test switch, etc.

Remarks:

(1): This circuit breaker is designed for single-phase 3-wire 100/200V circuits only.
(2): Connect the neutral wire to the central pole and the voltage lines (200V) to the left and right poles.
(3): Be sure to connect the overvoltage detection lead wire to the OFF side of the circuit breaker. If you connect it to the ON side, voltage will be applied to the OFF side even when the circuit breaker is turned OFF.
(4): Connect the overvoltage detection lead wire to the neutral wire on the load side (OFF side) of the circuit. The circuit breaker will not work unless this connection is made.
(5): Connect the overvoltage detection lead wire to the end of the load side (OFF side) of the circuit.
(6): The test button checks the overvoltage operation.

Time/Current characteristic curves

15-50A

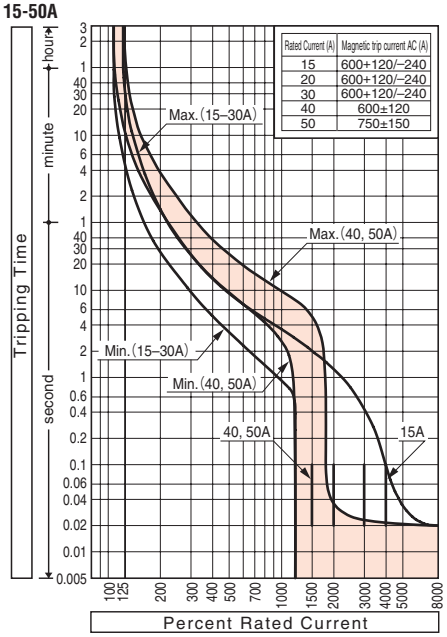

60-125A

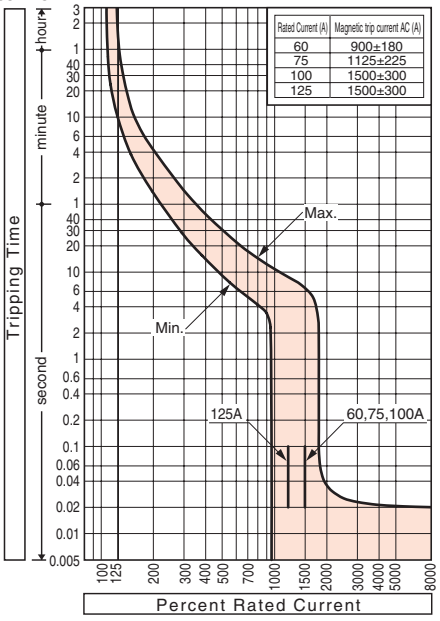

Ambient Compensating Curves

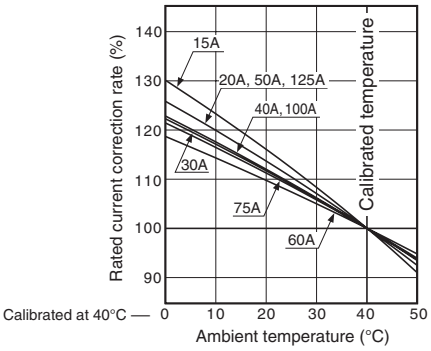

Combinations of Internally Mounted Accessories (Optional)

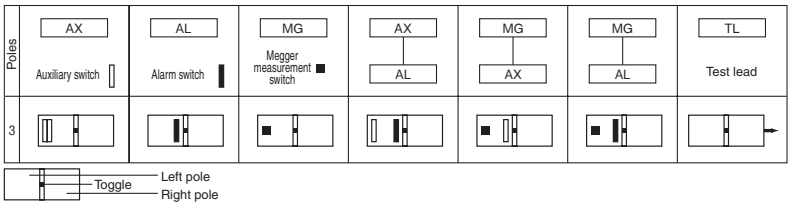

Outline dimensions (mm) NS125-SF

Front-connected

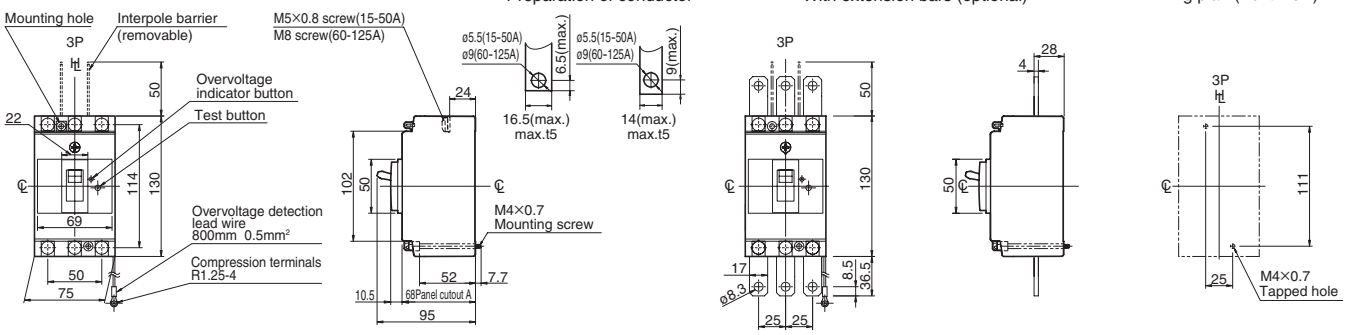

Panel cutout A (front view)

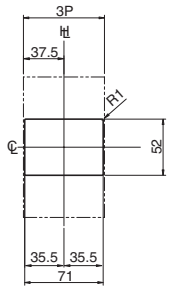

Panel cutout dimensions shown give an allowance of 1.0mm around the handle escutcheon.

Single phase 3-wire circuit breakers with neutral phase open protection characteristics

The operating voltage of the single phase 3-wire circuit breakers with neutral phase open protection is set at more than 120V and less than 135V. If there is an abnormal voltage above 135V due to neutral wire open phase, the circuit breaker will reliably trip within 1 second.

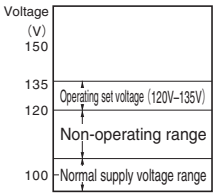

Control circuit

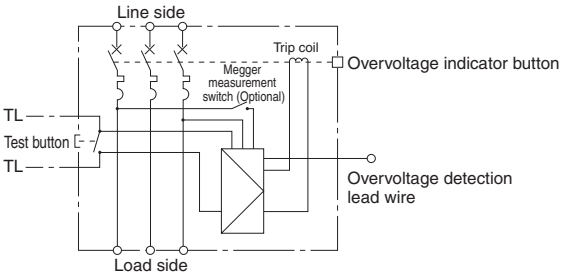

7 Characteristics and Outline Dimensions TemBreak PRO

Single phase 3-wire circuit breakers with neutral phase open protection

NE250-SF, NS250-SF

Ratings and Specifications

Frame size (A)		225	250	225	250
Type		NE250-SF		NS250-SF	
Number of poles / Elements		3P3E ⑩	3P3E ⑩	3P3E ⑩	3P3E ⑩
Phase and wires		1ø3W	1ø3W	1ø3W	1ø3W
■Ratings					
Rated current, A		125 225	250	125 225	250
Calibrated at 40° C		150		150	
		175		175	
		200		200	
Rated operational voltage AC V		100/200	100/200	100/200	100/200
Rated impulse withstand voltage〔U_{imp}〕 kV		8	8	8	8
Single 3-phase neutral wire open phase protection characteristics	Rated operating overvoltage AC V	135	135	135	135
	Rated non-operating overvoltage AC V	120	120	120	120
	Rated overvoltage operating time (sec)	1 or less	1 or less	1 or less	1 or less
■Rated breaking capacity, kA					
JIS C 8201-2-1 Ann.2 I_{cu} (sym) AC 100/200V		35	35	85	85
Weight (◉ marked standard type) kg		1.6	1.6	1.6	1.6
■Connections and Mountings					
Front-connected (FC)	Terminal screws	◉	◉	◉	◉
	With extension bars	○ ⑤③	○ ⑤③	○ ⑤③	○ ⑤③
Rear-connected (RC)	Flat bar studs	△	△	△	△
DIN rail mount		—	—	—	—
■Accessories (optional)		Symbol			
Externally mounted: Motor operator		M C	●	●	●	●
External operating handle	Breaker-mounted	H B	●	●	●	●
	Door-mounted (variable depth)	H P	●	●	●	●
Toggle extension		H A	—	—	—	—
Mechanical interlock	Slide type	M S	●	●	●	●
	Link type	M L	—	—	—	—
	Wire type	MW	—	—	—	—
Toggle holder		H H	●	●	●	●
Toggle lock		H L	●	●	●	●
Terminal cover	For front-connected	C F	●	●	●	●
	For rear-connected	C R	●	●	●	●
Terminal block for lead		T F	●	●	●	●
Door flange		D F	—	—	—	—
CE marking			Non	Non	Non	Non
Overcurrent trip mechanism			Thermal-magnetic	Thermal-magnetic	Thermal-magnetic	Thermal-magnetic
Overvoltage operation indication function			Mechanical button	Mechanical button	Mechanical button	Mechanical button
Colour of cover			Grey Blue	Grey Blue	Grey Blue	Grey Blue
Trip button (Colour)			Yes (Red)	Yes (Red)	Yes (Red)	Yes (Red)
Suitability for isolation			Yes	Yes	Yes	Yes
Reverse power flow circuit			Yes ⑦④	Yes ⑦④	Yes ⑦④	Yes ⑦④

Notes:

◉ : Standard. This configuration used unless otherwise specified.
○ : Optional standard. Specify when ordering.
● : "yes" or "available". — : "no" or "not available". △ : Custom-built product. Please contact us for details.
⑩ : They can also be applied to circuits where overcurrent flows in the neutral wire.
⑤③ : For the extension bars, please place the order separately in parts.
⑦④ : Since the overvoltage detection circuit has a continuous rating specification, there is no need to turn off the power of the detection circuit using a megger test switch, etc.

Remarks:

(1): This circuit breaker is designed for single-phase 3-wire 100/200V circuits only.
(2): Connect the neutral wire to the central pole and the voltage lines (200V) to the left and right poles.
(3): Be sure to connect the overvoltage detection lead wire to the OFF side of the circuit breaker. If you connect it to the ON side, voltage will be applied to the OFF side even when the circuit breaker is turned OFF.
(4): Connect the overvoltage detection lead wire to the neutral wire on the load side (OFF side) of the circuit. The circuit breaker will not work unless this connection is made.
(5): Connect the overvoltage detection lead wire to the end of the load side (OFF side) of the circuit.
(6): The test button checks the overvoltage operation.

Time/Current characteristic curves

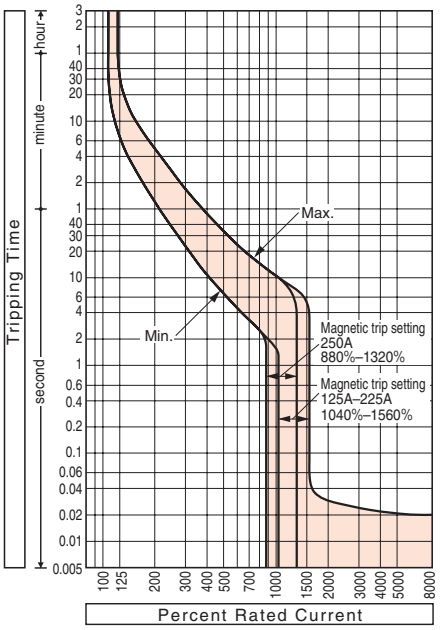

Ambient Compensating Curves

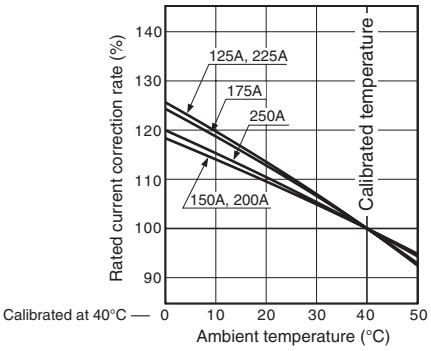

Single phase 3-wire circuit breakers with neutral phase open protection characteristics

The operating voltage of the single phase 3-wire circuit breakers with neutral phase open protection is set at more than 120V and less than 135V. If there is an abnormal voltage above 135V due to neutral wire open phase, the circuit breaker will reliably trip within 1 second.

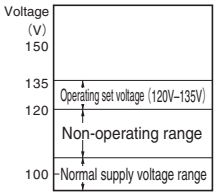

Combinations of Internally Mounted Accessories (Optional)

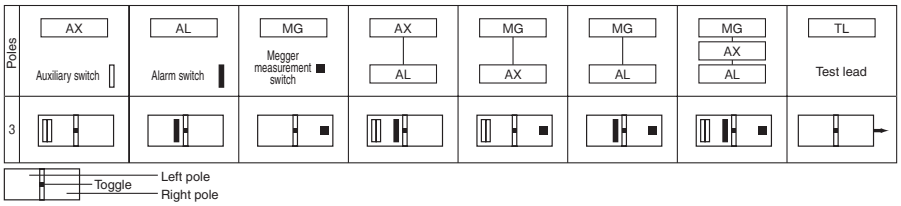

Outline dimensions (mm) NE250-SF, NS250-SF

Front-connected

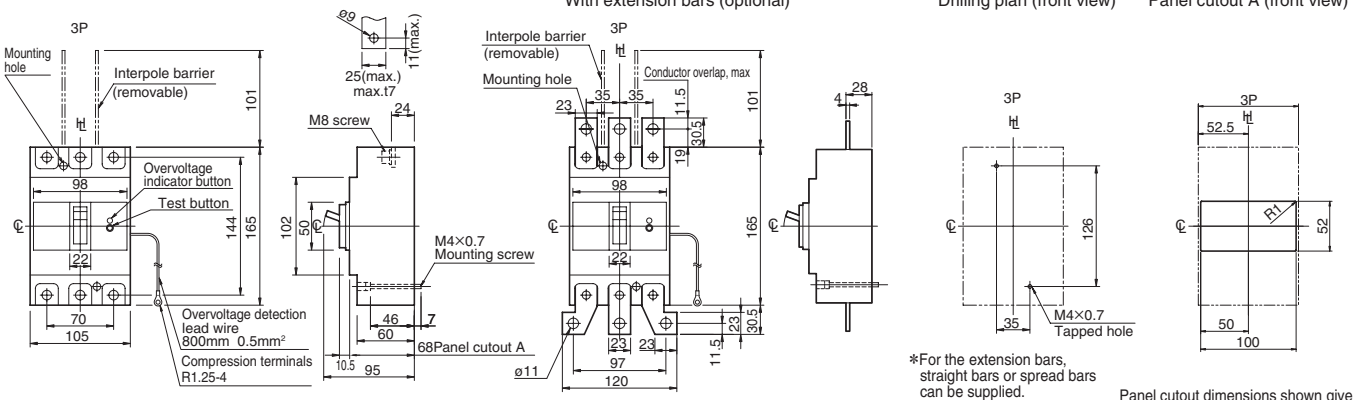

Control circuit

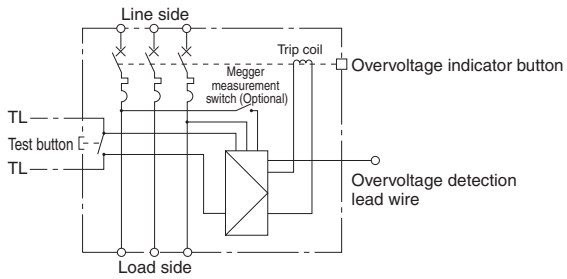

7 Characteristics and Outline Dimensions TemBreak PRO

Single phase 3-wire circuit breakers with neutral phase open protection

NE400-NF, NS400-NF

Ratings and Specifications

Frame size (A)		400	400		
Type		NE400-NF	NS400-NF		
Number of poles / Elements		3P2E ⑱	3P2E ⑱		
Phase and wires		1ø3W	1ø3W		
■Ratings					
Rated current, A		250	250		
Calibrated at 40° C		300	300		
		350	350		
		400	400		
Rated operational voltage AC V		100/200	100/200		
Rated impulse withstand voltage〔U_{imp}〕 kV		8	8		
Single 3-phase neutral wire open phase protection characteristics	Rated operating overvoltage AC V	135	135		
	Rated non-operating overvoltage AC V	120	120		
	Rated overvoltage operating time (sec)	1 or less	1 or less		
■Rated breaking capacity, kA					
JIS C 8201-2-1 Ann.2 I_{cu} (sym) AC 100/200V		35	85		
Weight (◉ marked standard type) kg		4.8	4.8		
■Connections and Mountings					
Front-connected (FC)	Terminal screws	◉	◉		
	With extension bars	○	○		
Rear-connected (RC)	Flat bar studs	△	△		
DIN rail mount		—	—		
■Accessories (optional)	Symbol				
Externally mounted: Motor operator	M C	●	●		
External operating handle	Breaker-mounted H B	●	●		
	Door-mounted (variable depth) H P	●	●		
Toggle extension	H A	●	●		
Mechanical interlock	Slide type M S	●	●		
	Link type M L	—	—		
	Wire type MW	—	—		
Toggle holder	H H	●	●		
Toggle lock	H L				
Terminal cover	For front-connected C F	●	●		
	For rear-connected C R	●	●		
Terminal block for lead	T F	●	●		
Door flange	D F	—	—		
CE marking		Non	Non		
Overcurrent trip mechanism		Thermal-magnetic	Thermal-magnetic		
Overvoltage operation indication function		Mechanical button	Mechanical button		
Colour of cover		Grey Blue	Grey Blue		
Trip button (Colour)		Yes (Red)	Yes (Red)		
Suitability for isolation		Yes	Yes		
Reverse power flow circuit		Yes ⑭	Yes ⑭		

Notes:

◉ : Standard. This configuration used unless otherwise specified.
○ : Optional standard. Specify when ordering.
● : "yes" or "available". — : "no" or "not available". △ : Custom-built product. Please contact us for details.
⑱ : Do not apply to circuits where overcurrent flows in the neutral wire.
⑭ : Since the overvoltage detection circuit has a continuous rating specification, there is no need to turn off the power of the detection circuit using a megger test switch, etc.

Remarks:

(1): This circuit breaker is designed for single-phase 3-wire 100/200V circuits only.
(2): Connect the neutral wire to the central pole and the voltage lines (200V) to the left and right poles.
(3): Be sure to connect the overvoltage detection lead wire to the OFF side of the circuit breaker. If you connect it to the ON side, voltage will be applied to the OFF side even when the circuit breaker is turned OFF.
(4): Connect the overvoltage detection lead wire to the neutral wire on the load side (OFF side) of the circuit. The circuit breaker will not work unless this connection is made.
(5): Connect the overvoltage detection lead wire to the end of the load side (OFF side) of the circuit.
(6): The test button checks the overvoltage operation.

Time/Current characteristic curves NS400-NF

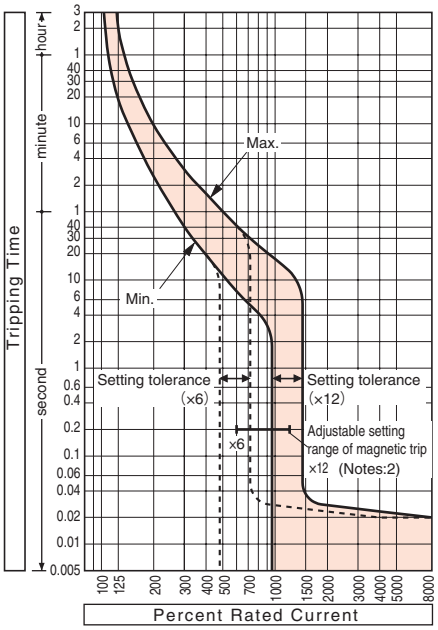

Ambient Compensating Curves

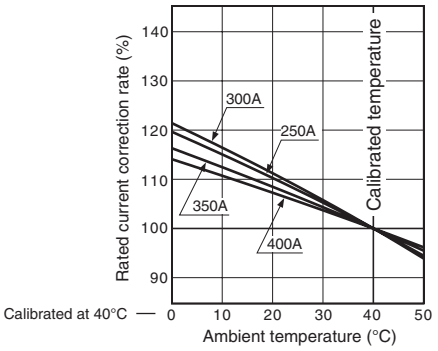

Magnetic trip pick-up current

Rated current (A)	Magnetic trip pick-up current (adjustable range) (A) I_n× 12	11	10	9	8	7	6
250	3000	2750	2500	2250	2000	1750	1500
300	3600	3300	3000	2700	2400	2100	1800
350	4200	3850	3500	3150	2800	2450	2100
400	4800	4400	4000	3600	3200	2800	2400

Notes (1) : Setting tolerance: ±20%.
(2) : **NE400-NF** type is a single point fixed setting of 10 times the rated current. Setting tolerance: ±10%.
(3) : The Time/Current characteristic curve is for adjustable instantaneous trip.

Remark (1) : If the model is adjustable and unless otherwise stated when ordering, the scale is factory set to ×12.

Combinations of Internally Mounted Accessories (Optional)

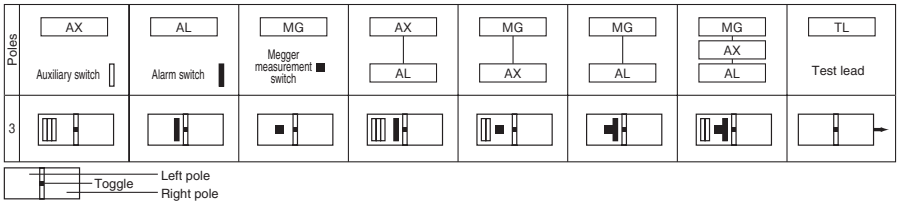

Single phase 3-wire circuit breakers with neutral phase open protection characteristics

The operating voltage of the single phase 3-wire circuit breakers with neutral phase open protection is set at more than 120V and less than 135V. If there is an abnormal voltage above 135V due to neutral wire open phase, the circuit breaker will reliably trip within 1 second.

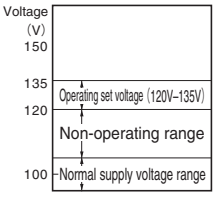

Outline dimensions (mm) NE400-NF, NS400-NF

Front-connected

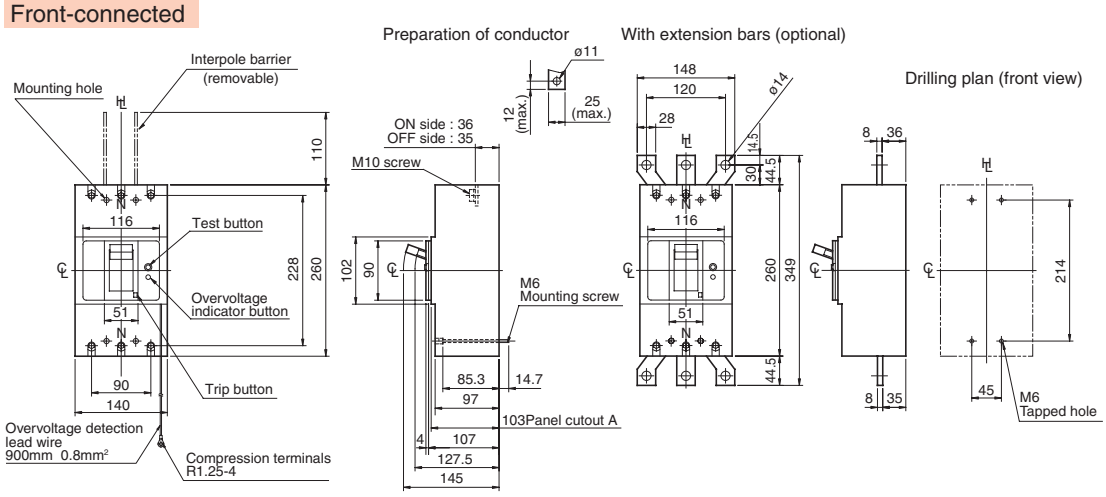

Panel cutout A (front view)

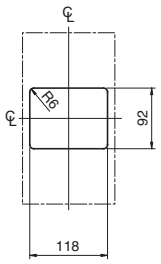

Panel cutout dimensions shown give an allowance of 1.0mm around the handle escutcheon.

Control circuit

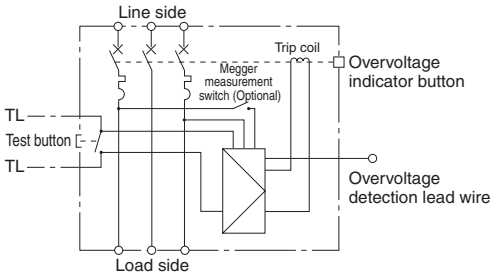

Time/Current characteristic curves NE400-NF

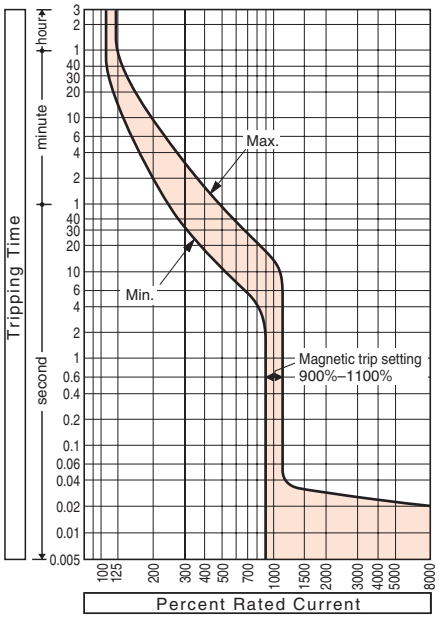

7 Characteristics and Outline Dimensions TemBreak PRO

Single phase 3-wire circuit breakers with neutral phase open protection

NS630-NF

Ratings and Specifications

Frame size (A)			600	630		
Type			NS630-NF			
Number of poles / Elements			3P2E ⑱	3P2E ⑱		
Phase and wires			1ø3W	1ø3W		
■Ratings						
Rated current, A			500	630		
Calibrated at 40° C			600			
Rated operational voltage AC V			100/200	100/200		
Rated impulse withstand voltage〔U_{imp}〕 kV			8	8		
Single 3-phase neutral wire open phase protection characteristics	Rated operating overvoltage AC V		135	135		
	Rated non-operating overvoltage AC V		120	120		
	Rated overvoltage operating time (sec)		1 or less	1 or less		
■Rated breaking capacity, kA						
JIS C 8201-2-1 Ann.2 I_{cu} (sym)		AC 100/200V	85	85		
Weight (◉ marked standard type) kg			10.0	10.0		
■Connections and Mountings						
Front-connected (FC)	Terminal screws		—	—		
	With extension bars		◉	◉		
Rear-connected (RC)	Flat bar studs		△	△		
DIN rail mount			—	—		
■Accessories (optional)		Symbol				
Externally mounted: Motor operator		M C	●	●		
External operating handle	Breaker-mounted	H B	●	●		
	Door-mounted (variable depth)	H P	●	●		
Toggle extension		H A	●	●		
Mechanical interlock	Slide type	M S	●	●		
	Link type	M L	—	—		
	Wire type	MW	—	—		
Toggle holder		H H	●	●		
Toggle lock		H L				
Terminal cover	For front-connected	C F	●	●		
	For rear-connected	C R	●	●		
Terminal block for lead		T F	●	●		
Door flange		D F	—	—		
CE marking			Non	Non		
Overcurrent trip mechanism			Thermal-magnetic	Thermal-magnetic		
Overvoltage operation indication function			Mechanical button	Mechanical button		
Colour of cover			Grey Blue	Grey Blue		
Trip button (Colour)			Yes (Red)	Yes (Red)		
Suitability for isolation			Yes	Yes		
Reverse power flow circuit			Yes ⑭	Yes ⑭		

Notes:

◉ : Standard. This configuration used unless otherwise specified.
○ : Optional standard. Specify when ordering.
● : "yes" or "available". — : "no" or "not available". △ : Custom-built product. Please contact us for details.
⑱ : Do not apply to circuits where overcurrent flows in the neutral wire.
⑭ : Since the overvoltage detection circuit has a continuous rating specification, there is no need to turn off the power of the detection circuit using a megger test switch, etc.

Remarks:

(1): This circuit breaker is designed for single-phase 3-wire 100/200V circuits only.
(2): Connect the neutral wire to the central pole and the voltage lines (200V) to the left and right poles.
(3): Be sure to connect the overvoltage detection lead wire to the OFF side of the circuit breaker. If you connect it to the ON side, voltage will be applied to the OFF side even when the circuit breaker is turned OFF.
(4): Connect the overvoltage detection lead wire to the neutral wire on the load side (OFF side) of the circuit. The circuit breaker will not work unless this connection is made.
(5): Connect the overvoltage detection lead wire to the end of the load side (OFF side) of the circuit.
(6): The test button checks the overvoltage operation.

Time/Current characteristic curves

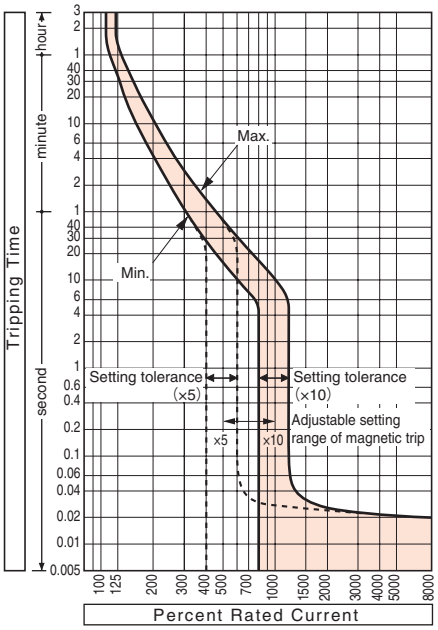

Ambient Compensating Curves

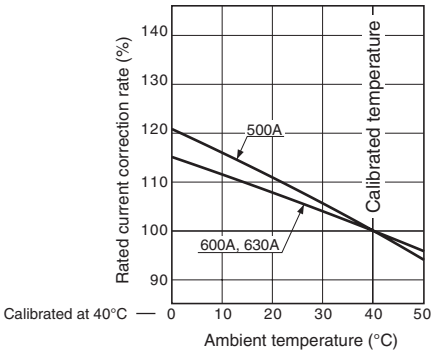

Magnetic trip pick-up current

Rated current (A)	Magnetic trip pick-up current (adjustable range) (A) I_n × 10	9	8	7	6	5
500	5000	4500	4000	3500	3000	2500
600	6000	5400	4800	4200	3600	3000
630	6300	5670	5040	4410	3780	3150

Note (1) : Setting tolerance: ±20%.
Remark (1) : Unless otherwise stated when ordering, the selector dial is factory set to position "10".

Combinations of Internally Mounted Accessories (Optional)

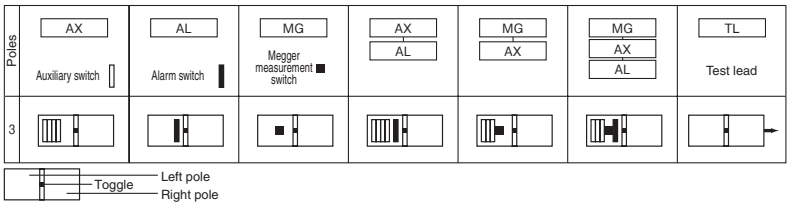

Single phase 3-wire circuit breakers with neutral phase open protection characteristics

The operating voltage of the single phase 3-wire circuit breakers with neutral phase open protection is set at more than 120V and less than 135V. If there is an abnormal voltage above 135V due to neutral wire open phase, the circuit breaker will reliably trip within 1 second.

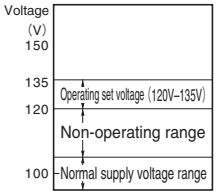

Outline dimensions (mm) NS630-NF

Front-connected

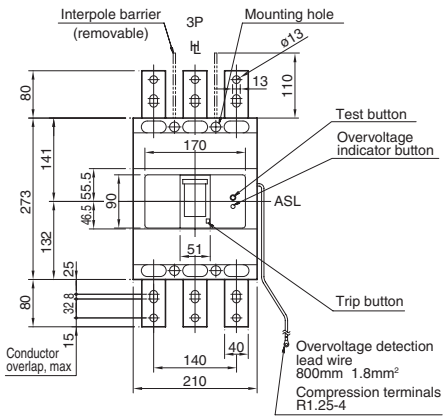

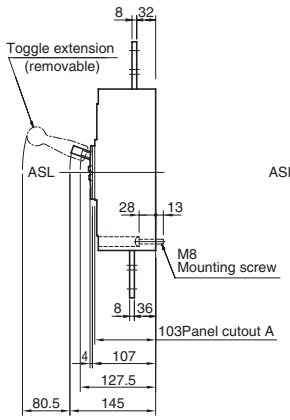

Drilling plan (front view)

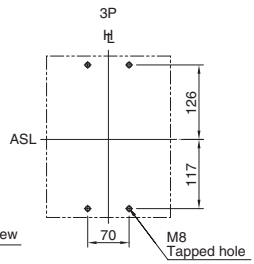

Panel cutout A (front view)

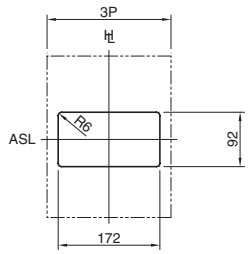

Panel cutout dimensions shown give an allowance of 1.0mm around the handle escutcheon.

Control circuit

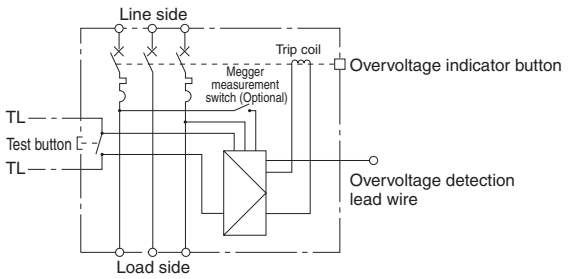

7 Characteristics and Outline Dimensions TemBreak PRO

Single phase 3-wire circuit breakers with neutral phase open protection

NS800-NF

Ratings and Specifications

Frame size (A)			800			
Type			**NS800-NF**			
Number of poles / Elements			3P2E ⑱			
Phase and wires			1ø3W			
■ Ratings						
Rated current, A			700			
Calibrated at 40° C			800			
Rated operational voltage AC V			100/200			
Rated impulse withstand voltage〔U_{imp}〕 kV			8			
Single 3-phase neutral wire open phase protection characteristics	Rated operating overvoltage AC V		135			
	Rated non-operating overvoltage AC V		120			
	Rated overvoltage operating time (sec)		1 or less			
■ Rated breaking capacity, kA						
JIS C 8201-2-1 Ann.2 I_{cu} (sym)		AC 100/200V	85			
Weight (◉ marked standard type) kg			11.0			
■ Connections and Mountings						
Front-connected (FC)	Terminal screws		—			
	With extension bars		◉			
Rear-connected (RC)	Flat bar studs		△			
DIN rail mount			—			
■ Accessories (optional)		Symbol				
Externally mounted: Motor operator		M C	●			
External operating handle	Breaker-mounted	H B	●			
	Door-mounted (variable depth)	H P	●			
Toggle extension		H A	●			
Mechanical interlock	Slide type	M S	●			
	Link type	M L	—			
	Wire type	MW	—			
Toggle holder		H H	●			
Toggle lock		H L				
Terminal cover	For front-connected	C F	●			
	For rear-connected	C R	●			
Terminal block for lead		T F	●			
Door flange		D F	—			
CE marking			Non			
Overcurrent trip mechanism			Thermal-magnetic			
Overvoltage operation indication function			Mechanical button			
Colour of cover			Grey Blue			
Trip button (Colour)			Yes (Red)			
Suitability for isolation			Yes			
Reverse power flow circuit			Yes ⑭			

Notes:

◉ : Standard. This configuration used unless otherwise specified.
○ : Optional standard. Specify when ordering.
● : "yes" or "available". — : "no" or "not available". △ : Custom-built product. Please contact us for details.
⑱ : Do not apply to circuits where overcurrent flows in the neutral wire.
⑭ : Since the overvoltage detection circuit has a continuous rating specification, there is no need to turn off the power of the detection circuit using a megger test switch, etc.

Remarks:

(1): This circuit breaker is designed for single-phase 3-wire 100/200V circuits only.
(2): Connect the neutral wire to the central pole and the voltage lines (200V) to the left and right poles.
(3): Be sure to connect the overvoltage detection lead wire to the OFF side of the circuit breaker. If you connect it to the ON side, voltage will be applied to the OFF side even when the circuit breaker is turned OFF.
(4): Connect the overvoltage detection lead wire to the neutral wire on the load side (OFF side) of the circuit. The circuit breaker will not work unless this connection is made.
(5): Connect the overvoltage detection lead wire to the end of the load side (OFF side) of the circuit.
(6): The test button checks the overvoltage operation.

Time/Current characteristic curves

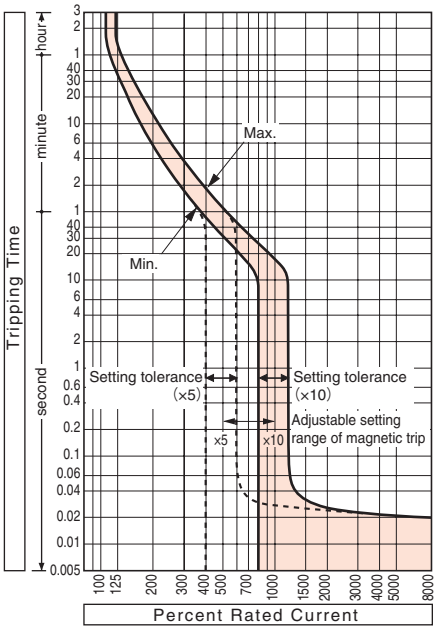

Ambient Compensating Curves

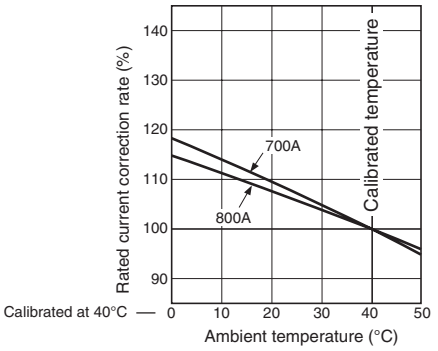

Magnetic trip pick-up current

Rated current (A)	Magnetic trip pick-up current (adjustable range) (A) I_n × 10	9	8	7	6	5
700	7000	6300	5600	4900	4200	3500
800	8000	7200	6400	5600	4800	4000

Note (1) : Setting tolerance: ±20%.
Remark (1) : Unless otherwise stated when ordering, the selector dial is factory set to position "10".

Combinations of Internally Mounted Accessories (Optional)

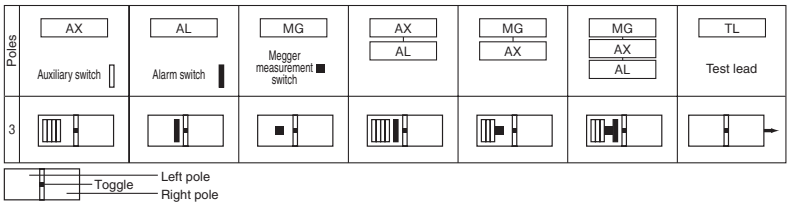

Single phase 3-wire circuit breakers with neutral phase open protection characteristics

The operating voltage of the single phase 3-wire circuit breakers with neutral phase open protection is set at more than 120V and less than 135V. If there is an abnormal voltage above 135V due to neutral wire open phase, the circuit breaker will reliably trip within 1 second.

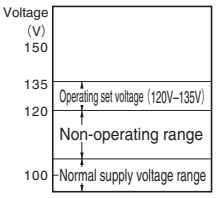

Outline dimensions (mm) NS800-NF

Front-connected

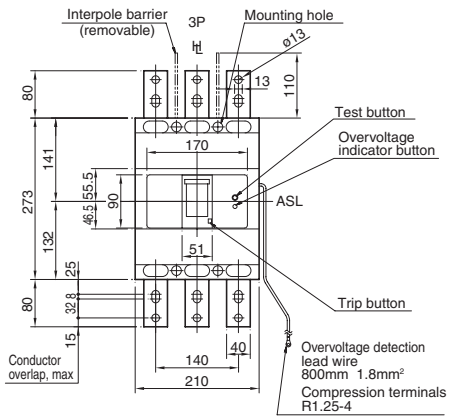

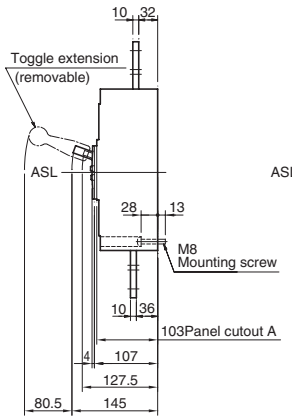

Drilling plan (front view)

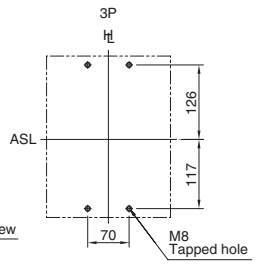

Panel cutout A (front view)

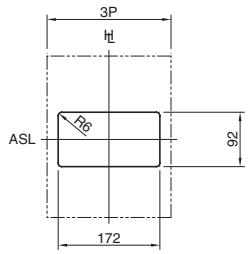

Panel cutout dimensions shown give an allowance of 1.0mm around the handle escutcheon.

Control circuit

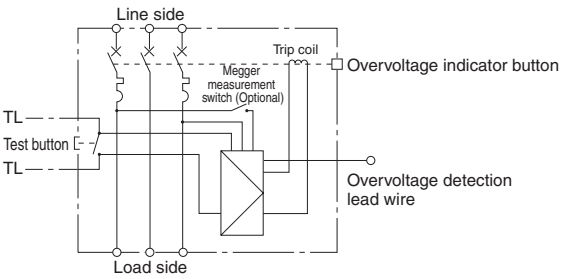

7 Characteristics and Outline Dimensions

Circuit Breaker for distribution boards

TB-5S

Ratings and Specifications

Category			Compatibility circuit breaker		
Frame size (A)			50		
Type			TB-5S		
Number of poles			1	2	3
■ Ratings					
Rated current, A			10	30	
Calibrated at 40°C			15	40	
45°C			20	50	
Rated operational voltage V	AC		240	415	415
	DC		125	125	—
■ Rated breaking capacity, kA					
JIS C 8201-2-1 Ann.2	AC	415 V	—	2.5	2.5
I_{cu} (sym)		240 V	2.5	5	—
		200 V	2.5	5	5
		100 / 200 V	—	—	—
		100 V	5	—	—
	DC	110 V	1	5	—
NK	AC	250 V	—	5 ㊹	—
(sym)		125 V	—	42	—
	DC	125 V	—	5	—
Weight kg			0.16	0.34	0.5
■ Connections					
Front-connected type on both line side and load side			● ㊺		
Line side plug-in type, load side front-connected type			—		
Plug-in type on both line side and load side			—		
■ Mountings (optional)					
Clip-in chassis			●		
Mounting base for single-row installation			—		
Mounting base for branched-into-dual-rows			—		
■ Accessories (optional)		Symbol			
Externally mounted: Toggle holder		HH	●		
Externally mounted: Toggle lock		HL	●	—	
Externally mounted: Toggle cap		HC	●	—	
CE marking			Non		
Overcurrent trip mechanism			Thermal-magnetic		
Colour of cover			Black		
Reverse connection			Yes		

Notes:

● : "yes" or "available". — : "no" or "not available".

㊹ : 2.5kA for 10A.

㊺ : A wire clamping terminal is provided.

Time/Current characteristic curves

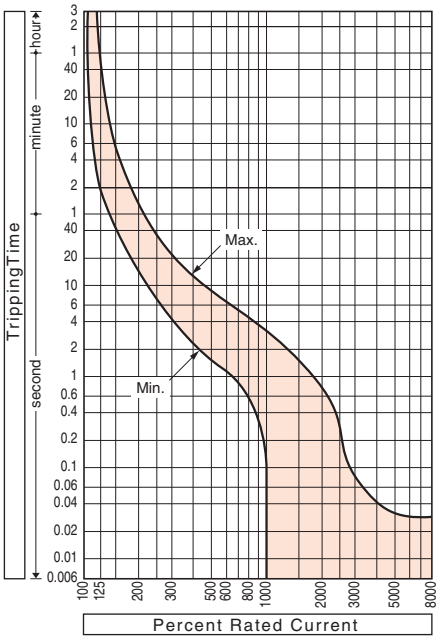

Ambient Compensating Curves

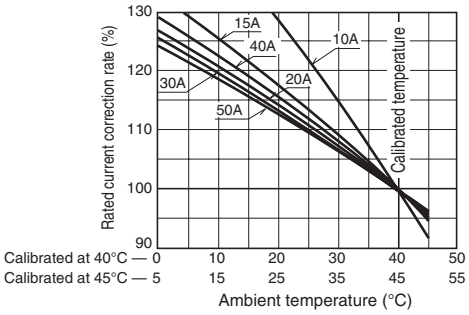

Outline dimensions (mm) TB-5S

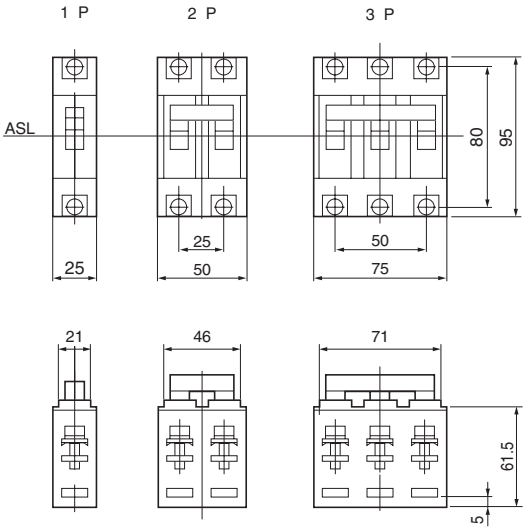

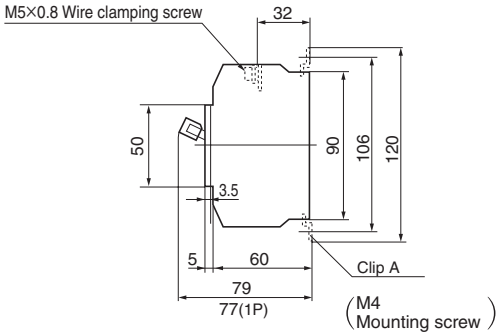

Preparation of conductor

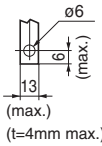

Clip and Clip-in chassis Outline dimensions (mm)

Clip A

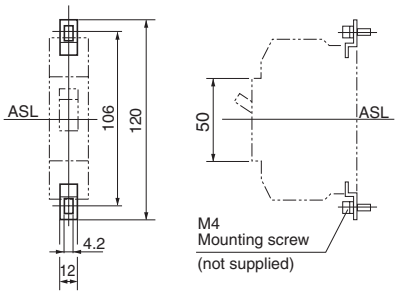

NOTE: Clips A are supplied with breakers, 2 pieces/pole. For multi-pole installation, clip-to-clip distance is 25mm.

Clip-in Chassis, part number TDB-50SG
(12-pieces snap-off chassis)

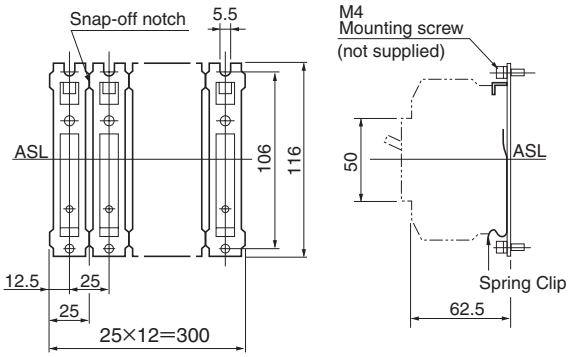

NOTE: 1.Clip-in chassis is notched between every two pieces to adjust number of pieces to number of breaker poles.
(Bend once or twice to snap off.)

2.Screw clip-in chassis down at 4 or 5 pole intervals.

7 Characteristics and Outline Dimensions

Circuit Breaker for distribution boards

TB-5P

Ratings and Specifications

Category			Line side Plug-in			
Frame size (A)			50			
Type			**TB-5P**			
Number of poles			2			
■ Ratings						
Rated current, A			10 30			
Calibrated at 40°C			15 40			
45°C			20 50			
Rated operational voltage V	AC		415			
	DC		125			
■ Rated breaking capacity, kA						
JIS C 8201-2-1 Ann.2	AC	415 V	2.5			
I_{cu} (sym)		240 V	5			
		200 V	5			
		100 / 200 V	—			
		100 V	—			
	DC	110 V	5			
NK	AC	250 V	5 ㊹			
(sym)		125 V	42			
	DC	125 V	5			
Weight kg			0.28			
■ Connections						
Front-connected type on both line side and load side			—			
Line side plug-in type, load side front-connected type			●			
Plug-in type on both line side and load side			—			
■ Mountings (optional)						
Clip-in chassis			—			
Mounting base for single-row installation			● ㊼			
Mounting base for branched-into-dual-rows			● ㊼			
■ Accessories (optional)				**Symbol**		
Externally mounted: Toggle holder			●	HH		
Externally mounted: Toggle lock			—	HL		
Externally mounted: Toggle cap			—	HC		
CE marking			Non			
Overcurrent trip mechanism			Thermal-magnetic			
Colour of cover			Black			
Reverse connection			Yes			

Notes:

● : "yes" or "available". — : "no" or "not available".

㊹ : 2.5kA for 10A.

㊼ : Specify the branch bars when ordering.

Time/Current characteristic curves

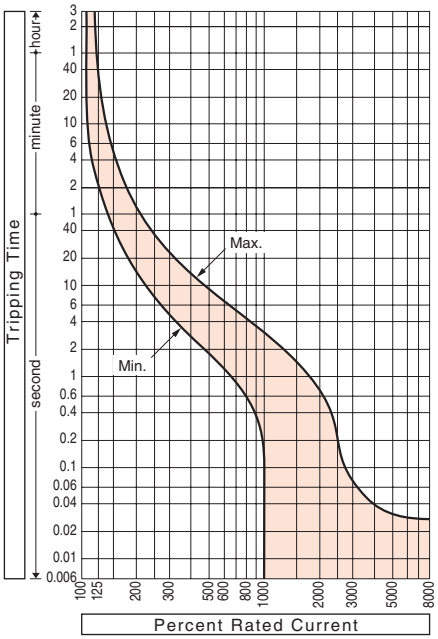

Ambient Compensating Curves

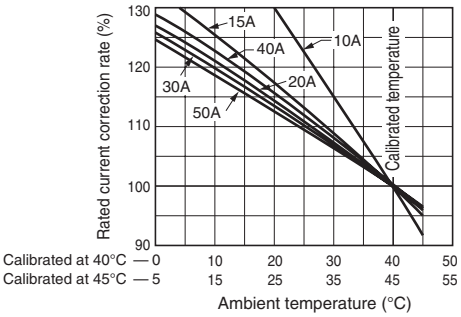

Outline dimensions (mm) TB-5P

2P

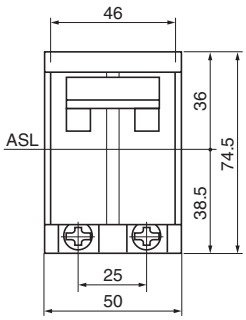

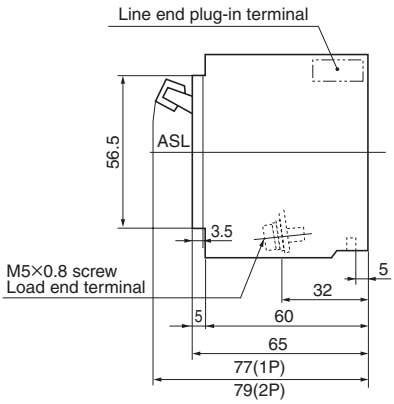

Preparation of conductor

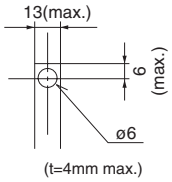

Single mounting base –TDB-50PC

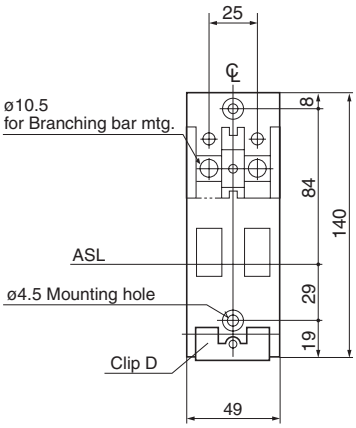

Example 1

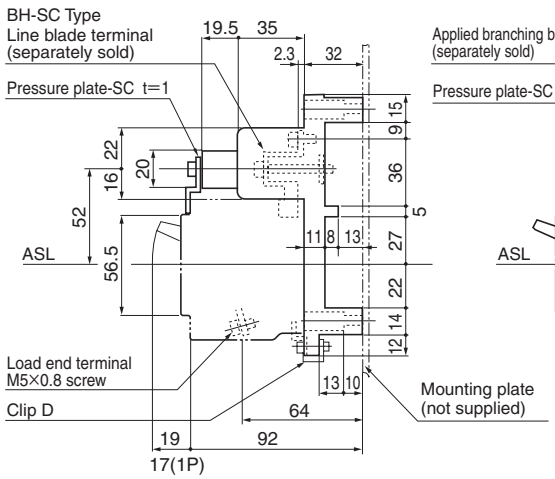

Example 2

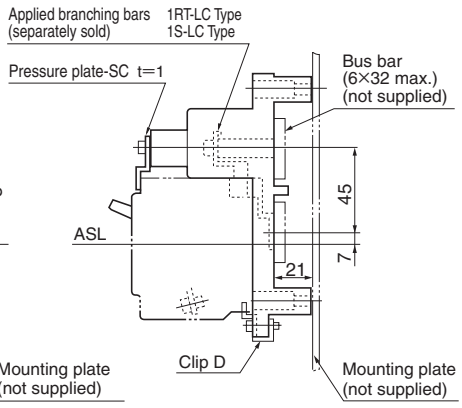

Double mounting base –TDA-50PC Type

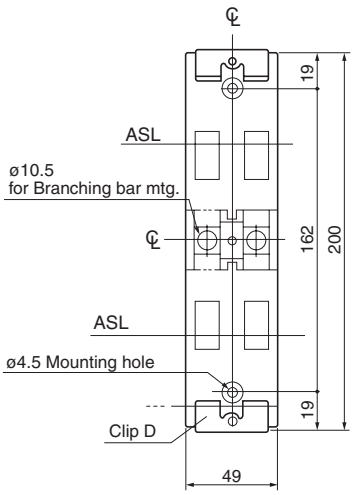

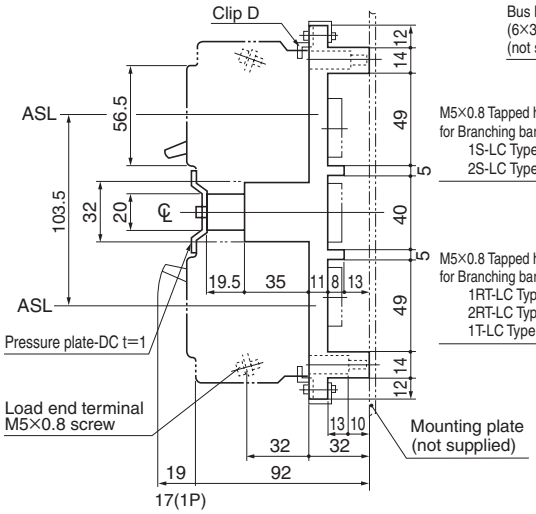

Drilling plan (front view)

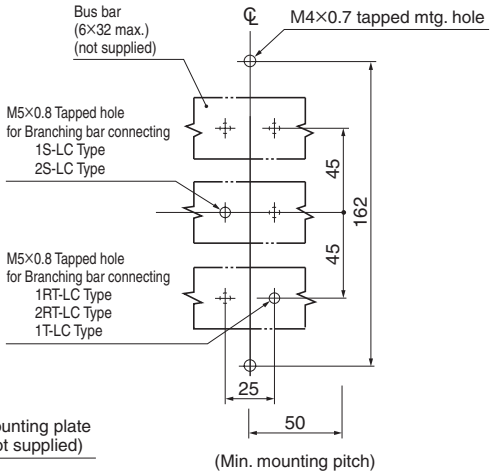

Note: See page 7-170 for branch conductors.

7 Characteristics and Outline Dimensions

Circuit Breaker for distribution boards

TB-5D

Ratings and Specifications

Category			Plug-in
Frame size (A)			50
Type			**TB-5D**
Number of poles			2
■ Ratings			
Rated current, A			10 30
Calibrated at 40°C			15 40
45°C			20 50
Rated operational voltage V	AC		250
	DC		125
■ Rated breaking capacity, kA			
JIS C 8201-2-1 Ann.2	AC	415 V	—
I_{cu} (sym)		240 V	—
		200 V	—
		100 / 200 V	—
		100 V	—
	DC	110 V	—
NK	AC	250 V	5 ㊹
(sym)		125 V	42
	DC	125 V	5
Weight kg			0.28
■ Connections			
Front-connected type on both line side and load side			—
Line side plug-in type, load side front-connected type			—
Plug-in type on both line side and load side			●
■ Mountings (optional)			
Clip-in chassis			—
Mounting base for single-row installation			● ㊼
Mounting base for branched-into-dual-rows			● ㊼
■ Accessories (optional)			**Symbol**
Externally mounted: Toggle holder			HH ●
Externally mounted: Toggle lock			HL —
Externally mounted: Toggle cap			HC —
CE marking			Non
Overcurrent trip mechanism			Thermal-magnetic
Colour of cover			Black
Reverse connection			Yes

Notes:

● : "yes" or "available". — : "no" or "not available".

㊹ : 2.5kA for 10A.

㊼ : Specify the branch bars when ordering.

Time/Current characteristic curves

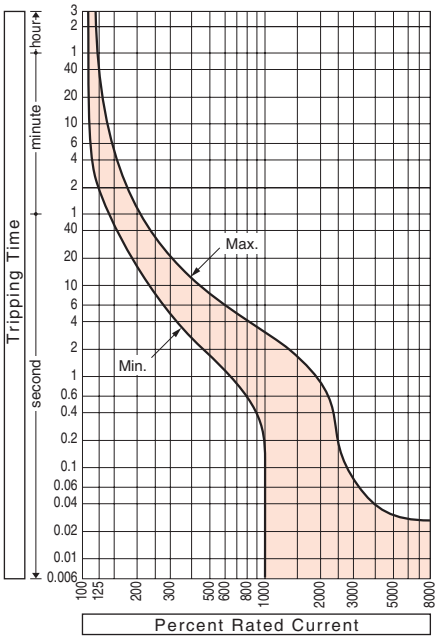

Ambient Compensating Curves

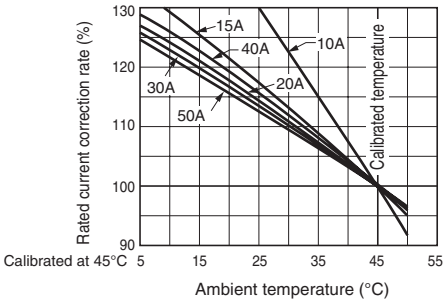

Outline dimensions (mm) TB-5D

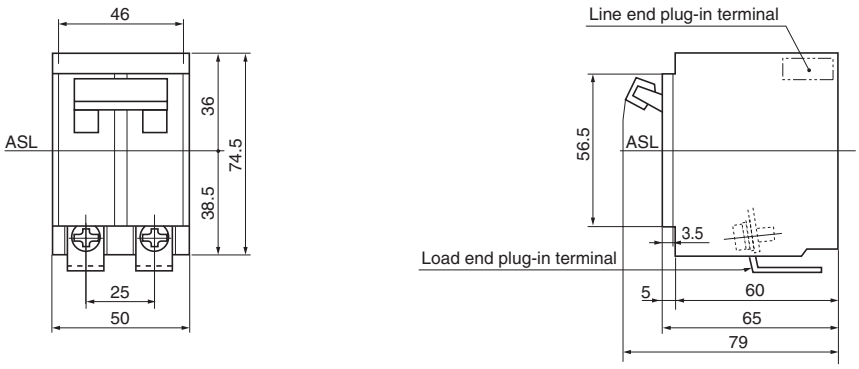

Single mounting base–TDB-50DC

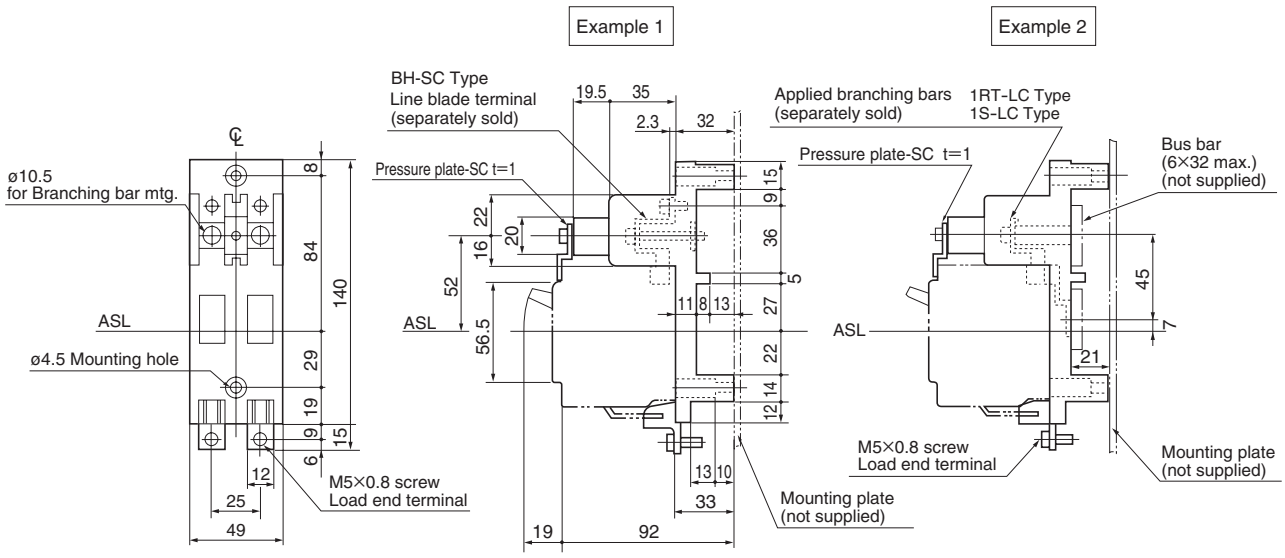

Double mounting base –TDA-50DC Type

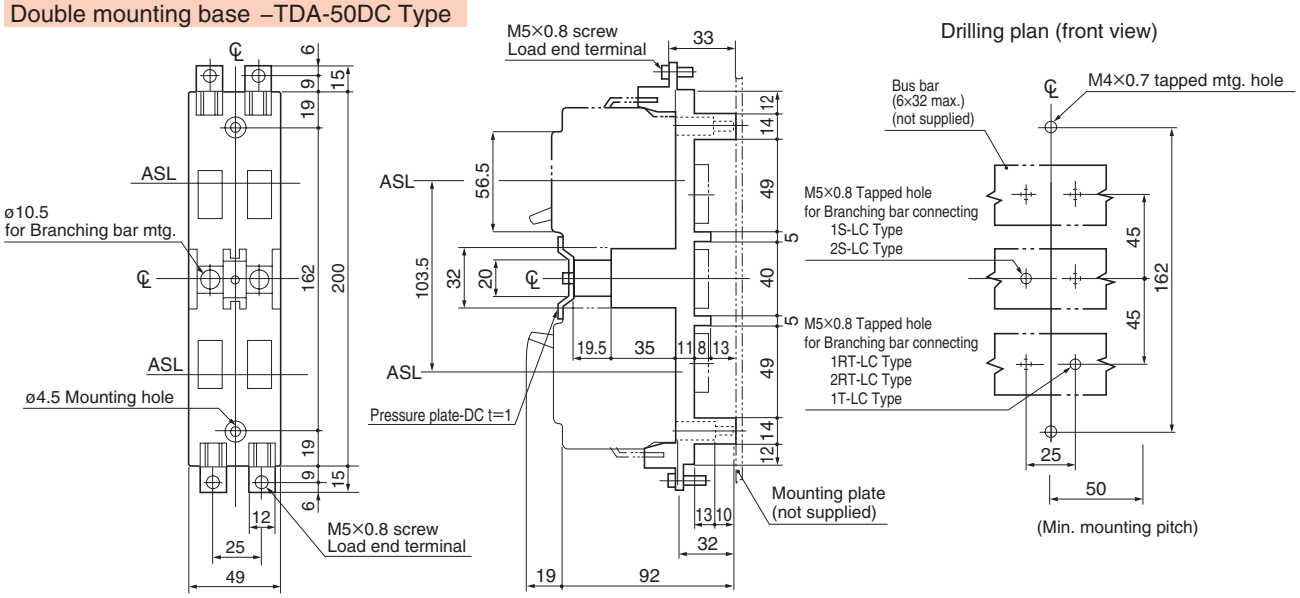

Note: See page 7-170 for branch conductors.

7 Characteristics and Outline Dimensions

Circuit Breaker for distribution boards

TB-51C, TB-52C

Ratings and Specifications

Category			TB mini size	
Frame size (A)			50	50
Type			**TB-51C**	**TB-52C**
Number of poles			2 ㊸	2
■ Ratings				
Rated current, A			15	15
Calibrated at 40°C			20	20
45°C			30	30
Rated operational voltage V	AC		100	240
	DC		—	—
■ Rated breaking capacity, kA				
JIS C 8201-2-1 Ann.2	AC	415 V	—	—
I_{cu} (sym)		240 V	—	2.5
		200 V	—	2.5
		100 / 200 V	—	5
		100 V	5	—
	DC	110 V	—	—
NK	AC	250 V	—	—
(sym)		125 V	—	—
	DC	125 V	—	—
Weight kg			0.15	0.16
■ Connections				
Front-connected type on both line side and load side			● ㊽	● ㊽
Line side plug-in type, load side front-connected type			—	—
Plug-in type on both line side and load side			—	—
■ Mountings (optional)				
Clip-in chassis			●	●
Mounting base for single-row installation			—	—
Mounting base for branched-into-dual-rows			—	—
■ Accessories (optional)		**Symbol**		
Externally mounted: Toggle holder		HH	●	●
Externally mounted: Toggle lock		HL	—	—
Externally mounted: Toggle cap		HC	●	●
CE marking			Non	Non
Overcurrent trip mechanism			Thermal-magnetic	Thermal-magnetic
Colour of cover			Black	Black
Reverse connection			Yes	Yes

Notes:

● : "yes" or "available". — : "no" or "not available".

㊸ : This is 2-pole 1-element.

㊽ : Distribution board branch conductors and busbar conductor supports are available. (Optional)

Time/Current characteristic curves

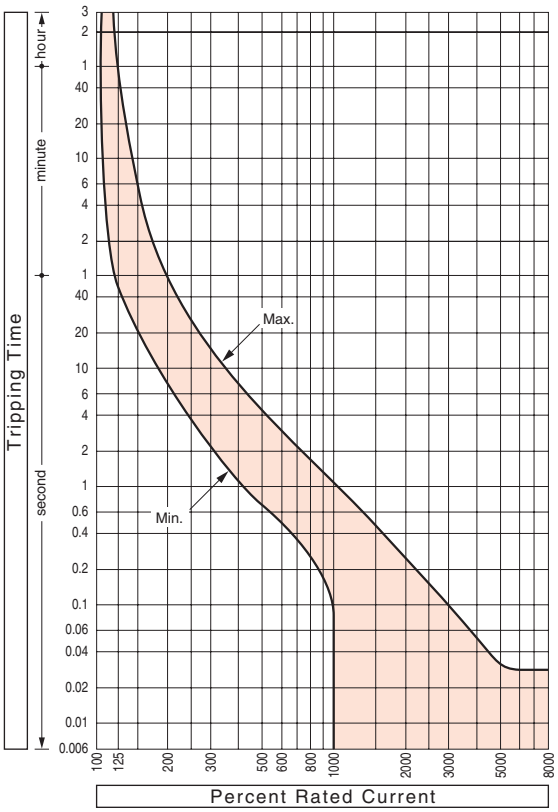

Ambient Compensating Curves

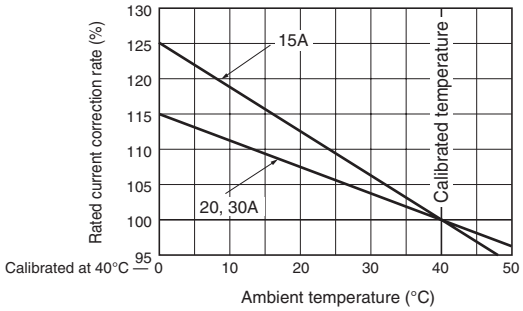

Support for distribution board branch conductors and busbar conductors

Prepare branch conductors (optional) and busbar mounting screws.

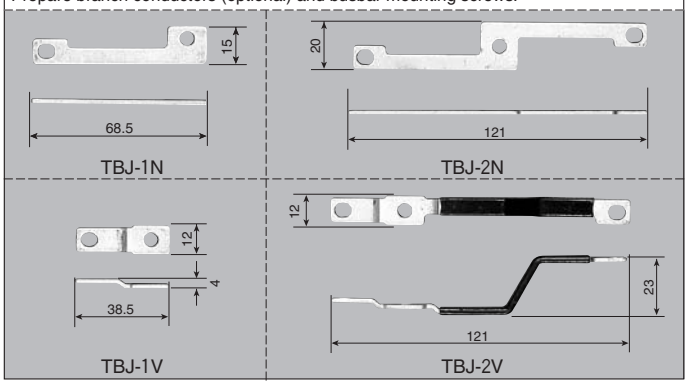

Type	Qty used / 1 row		
	Single-phase 100V	Single-phase 200V	Single-phase 100V / 200V
TBJ-1V	2	—	1
TBJ-2N	1	—	—
TBJ-2V	—	2	1
TBJ-1N	—	—	1

Note: For connection, see the conductor layout diagram on page 7-169.

Busbar conductor support type BJ-3S

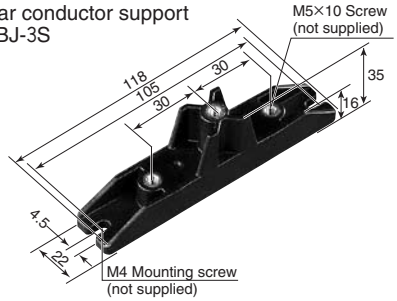

Outline dimensions (mm) TB-51C, TB-52C

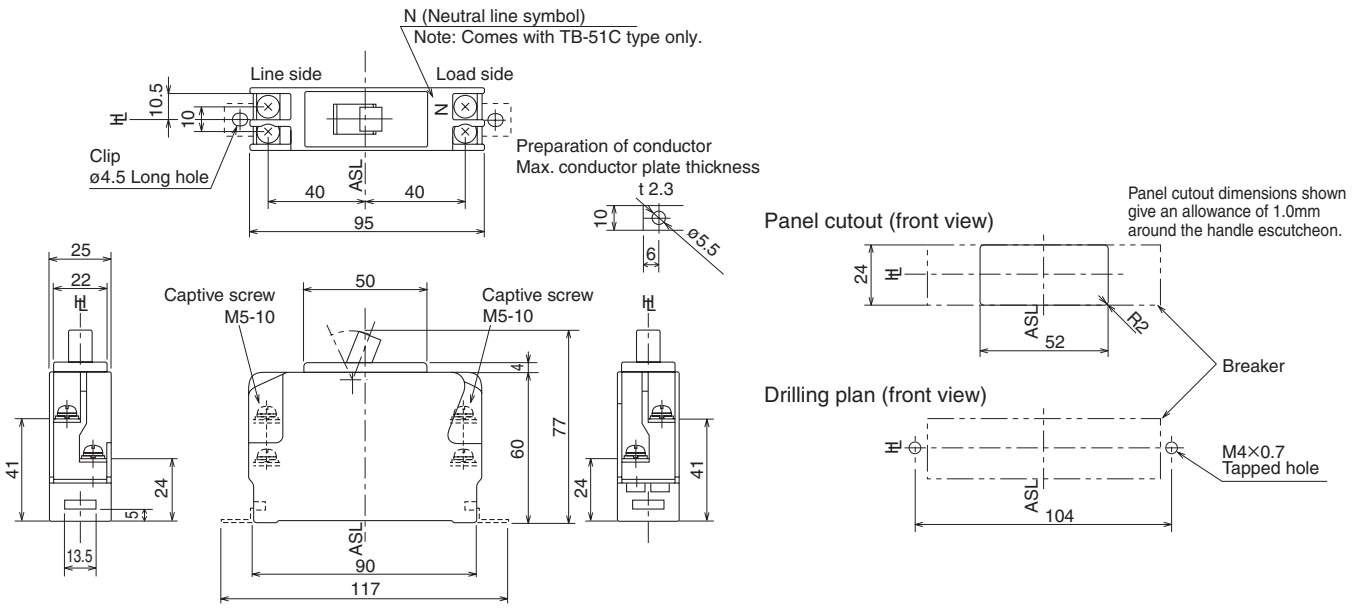

Clip-in chassis mounting dimensions

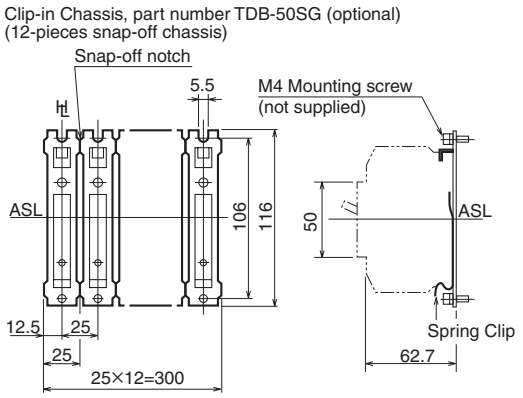

NOTE: 1.Clip-in chassis is notched between every two pieces to adjust number of pieces to number of breaker poles. (Bend once or twice to snap off.)

2.Screw clip-in chassis down at 4 or 5 pole intervals.

Conductor layout diagram

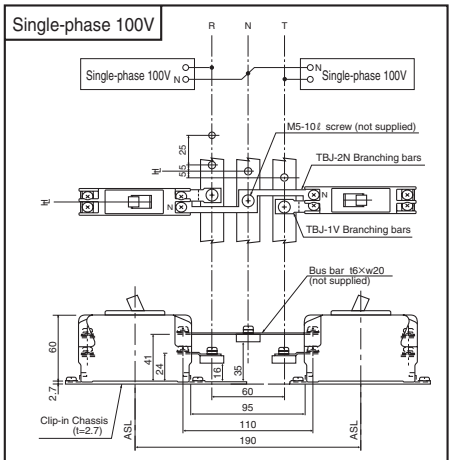

(Note) Tightening torque of branch conductor connecting screws: 2 to 2.9Nm

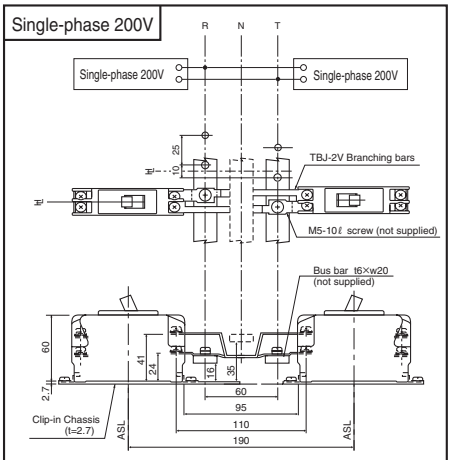

(Note) Tightening torque of branch conductor connecting screws: 2 to 2.9Nm

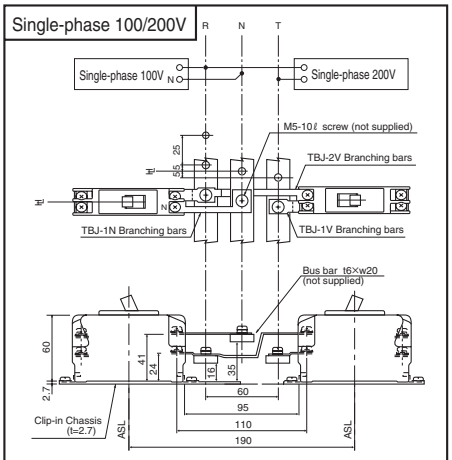

(Note) Tightening torque of branch conductor connecting screws: 2 to 2.9Nm

Applicable breakers — TB-5D, TB-5P

◉Mounting bases, branching bars and other accessories

Mounting bases for double-row installation (for four circuits)

◉TDA-50PC

TB-5P type plug-in line side.
The line side can be connected to the busbar with a branch body with a blade.

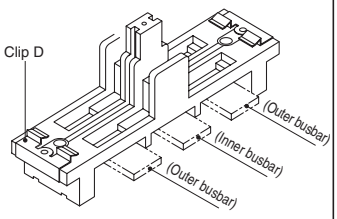

◉TDA-50DC

TB-5D type plug-in for both line side and load side.
The line side can be connected to the busbar with a branch body with a blade.

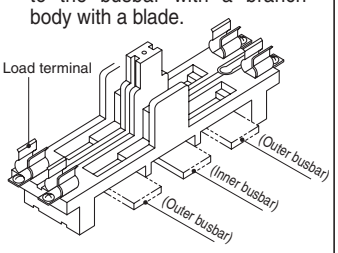

Mounting bases for single-row installation (for two circuits)

◉TDB-50PC

TB-5P type plug-in line side.
The line side can be connected to the busbar with a branch body with a blade.

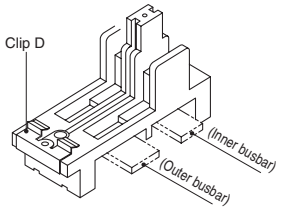

◉TDB-50DC

TB-5D type plug-in for both line side and load side.
The line side can be connected to the busbar with a branch body with a blade.

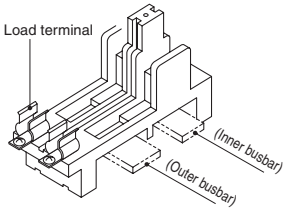

◉Pressure plate DC

It is used to fix the breaker to a 2-row plug-in base.

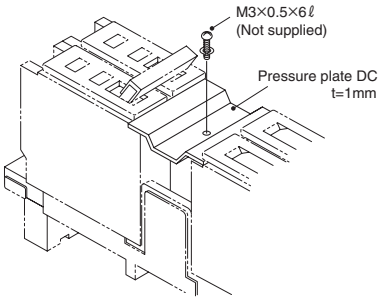

◉Pressure plate SC

It is used to fix the breaker to a 1-row plug-in base.

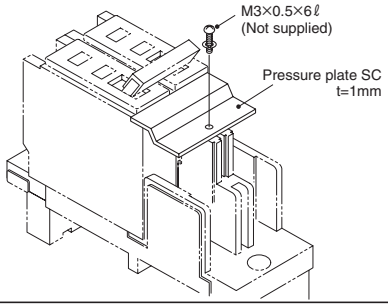

◉Braided line terminal BH-SC

Single-row plug-in base terminal for connection of separate circuit breakers to different power supplies.

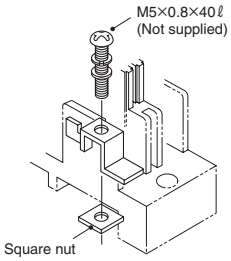

◉Branching bars

Application	Two branches from outer busbar	Two branches from inner busbar
Type	2RT-LC	2S-LC
Arrangement	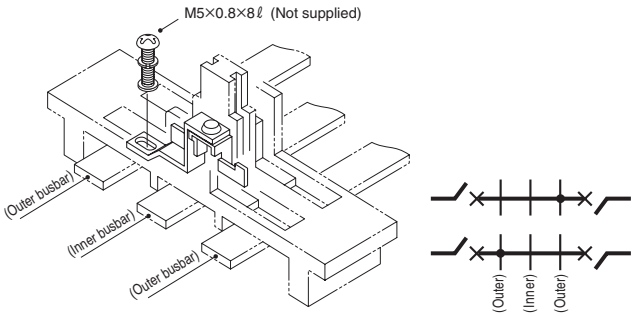	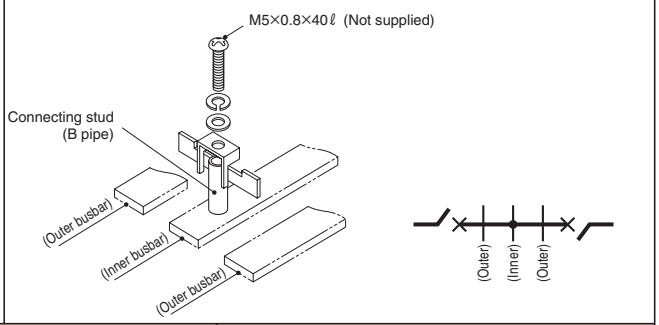

Application	One branch from inner busbar	One branch from outer busbar	One branch from outer busbar in opposite direction
Type	IS-LC	IRT-LC	IT-LC
Arrangement	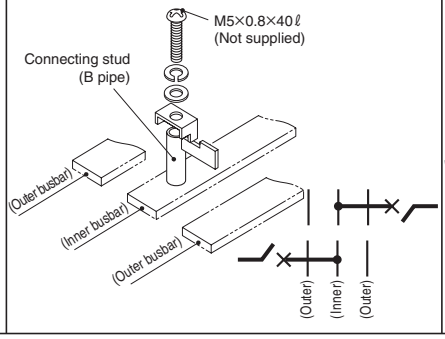	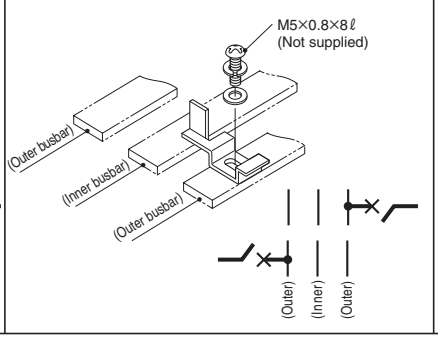	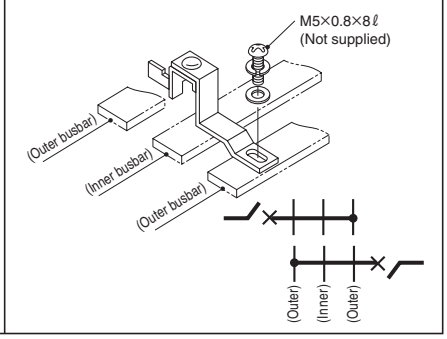

Applicable breakers — PS50-PF, PS125-NF/PF/NN/NE/PE

◉Plug-in mounting base

● Outline dimensions for double-row (TPPM12D3)

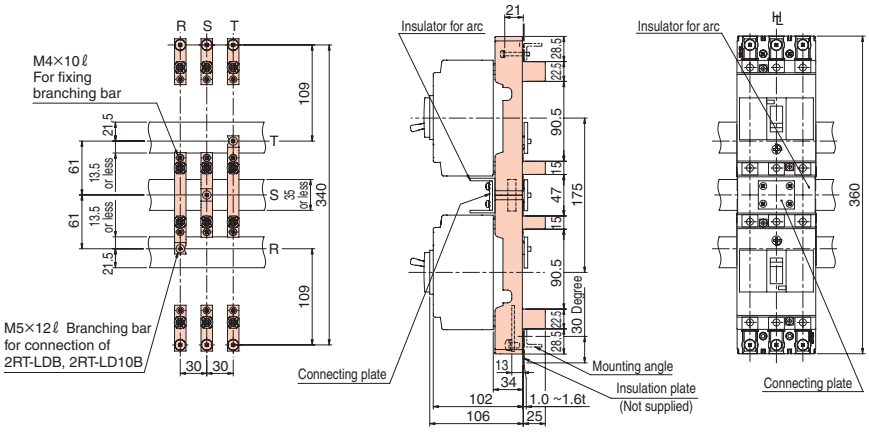

◉Branching bars

*Not supplied

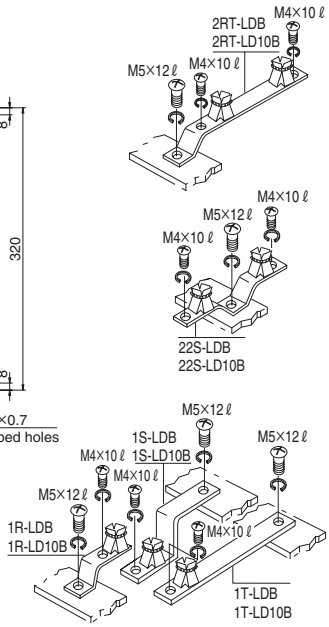

● Outline dimensions for single-row (TPPM12S3)

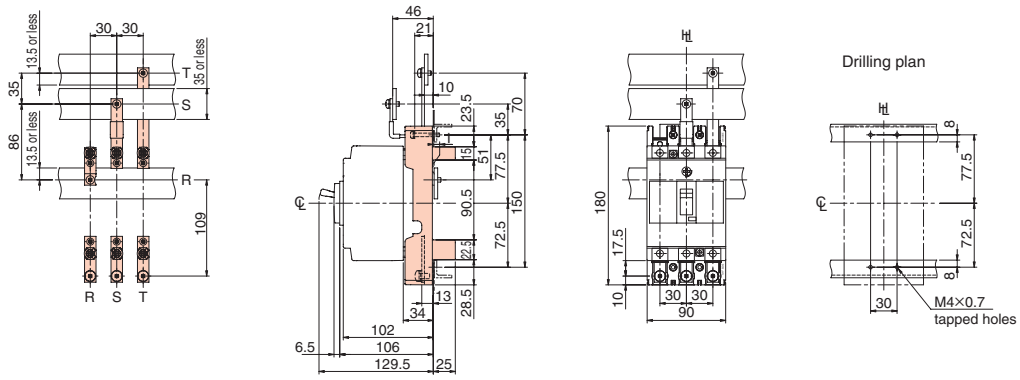

Components / Parts to be purchased				Mounting / connecting screws			Remarks
	Name	Type	Qty	Size	Qty	Remarks	
For double	Plug-in base	TPPM12D3	2	M4×30	4	For breaker mounting	For 3-pole breaker
	Branching bar (thickness)	2RT-LDB (t=2)	2	M5×12	2	For busbar connection	15 – 50A
				M4×10	4	For Mounting base installation	
		22S-LDB (t=2)	1	M5×12	1	For busbar connection	
				M4×10	2	For Mounting base installation	
		2RT-LD10B (t=3)	2	M5×12	2	For busbar connection	60 – 125A
				M4×10	4	For Mounting base installation	
		22S-LD10B (t=3)	1	M5×12	1	For busbar connection	
				M4×10	2	For Mounting base installation	
	Connecting plate	Connecting plate 3	1	M4×25	4		
	Insulator for arc	Arc guard 3	1				
	Branching bar barrier	Busbar barrier D	2				
For single	Plug-in base	TPPM12S3	1	M4×30	4	For breaker mounting	For 3-pole breaker
	Branching bar (thickness)	1R-LDB (t=2)	1	M5×12	3	For busbar connection	15 – 50A
		1S-LDB (t=2)	1	M4×8	3	For Mounting base installation	
		1T-LDB (t=2)	1				
		1R-LD10B (t=3)	1	M5×12	3	For busbar connection	60 – 125A
		1S-LD10B (t=3)	1	M4×8	3	For Mounting base installation	
		1T-LD10B (t=3)	1				

Notes:
1. The number required to form either single or double plug-in base.
2. Branch bars for 10 – 50A and 60 – 125A differ in thickness only. The conductor for 10 – 50A (2mm thick) can be used for applications where the breaker rated current is 50A or less.

◉Connecting plate
【Order code : CP3E】

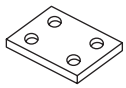

◉Insulator for arc
【Order code : ARC3E】

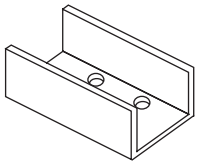

◉Branching bar barrier
【Order code : BARRD】

Plug-in base for Distribution boards / Branching bars

Applicable breakers S50-SF, S125-SF/SN, PE30-NF/NN, PS30-NF, PE50-NF/NN, PS50-NF, PE60-NF, PS60-NF, PE125-NF/NN

◉Plug-in mounting base

● Outline dimensions for double-row(T2PM12LD2, T2PM12LD3)

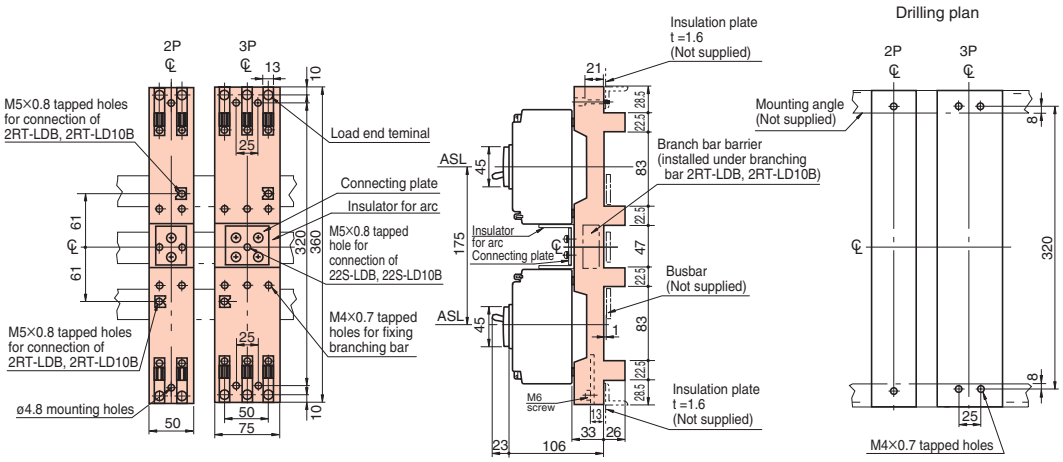

◉Branching bars

＊Not supplied

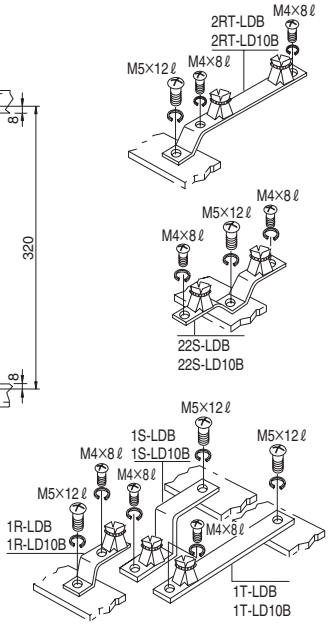

● Outline dimensions for single-row(T2PM12LS2, T2PM12LS3)

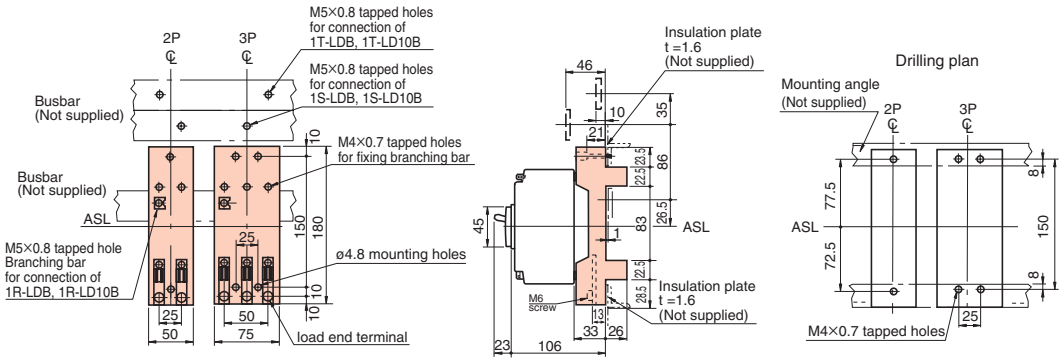

Components / Parts to be purchased				Mounting / connecting screws			Remarks
	Name	Type	Qty	Size	Qty	Remarks	
For double	Plug-in base	T2PM12LD2	2	M4×30	2	For breaker mounting	For 2-pole breaker
		T2PM12LD3	2	M4×30	4	For breaker mounting	For 3-pole breaker
	Branching bar (thickness)	2RT-LDB (t=2)	2	M5×12	2	For busbar connection	15 – 50A
				M4×8	4	For Mounting base installation	
		22S-LDB (t=2)	1	M5×12	1	For busbar connection	
				M4×8	2	For Mounting base installation	
		2RT-LD10B (t=3)	2	M5×12	2	For busbar connection	60 – 125A
				M4×8	4	For Mounting base installation	
		22S-LD10B (t=3)	1	M5×12	1	For busbar connection	
				M4×8	2	For Mounting base installation	
	Connecting plate	Connecting plate 2 (for 2-pole breaker)	1	M4×35	4		
		Connecting plate 3PD (for 3-pole breaker)	1	M4×35	4		
	Insulator for arc	Arc guard 2P (for 2-pole breaker)	1				
		Arc guard 3P (for 3-pole breaker)	1				
	Branching bar barrier	Busbar barrier D	2				
For single	Plug-in base	T2PM12LS2	1	M4×30	2	For breaker mounting	For 2-pole breaker
		T2PM12LS3	1	M4×30	4	For breaker mounting	For 3-pole breaker
	Branching bar (thickness)	1R-LDB (t=2)	1	M5×12	3	For busbar connection	15 – 50A
		1S-LDB (t=2)	1	M4×8	3	For Mounting base installation	
		1T-LDB (t=2)	1				
		1R-LD10B (t=3)	1	M5×12	3	For busbar connection	60 – 125A
		1S-LD10B (t=3)	1	M4×8	3	For Mounting base installation	
		1T-LD10B (t=3)	1				

Notes:
1. The number required to form either single or double plug-in base.
2. Branch bars for 10 – 50A and 60 – 125A differ in thickness only. The conductor for 10 – 50A (2mm thick) can be used for applications where the breaker rated current is 50A or less.

◉Connecting plate

【Order code : CP2E (for 2-pole breaker)
CP3D (for 3-pole breaker)】

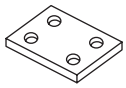

◉Insulator for arc

【Order code : ARC2D (for 2-pole breaker)
ARC3D (for 3-pole breaker)】

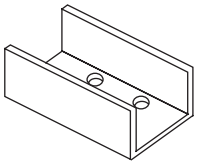

◉Branching bar barrier

【Order code : BARRD】

Applicable breakers S100-GF, S125-GF

◉Plug-in mounting base

● Outline dimensions for double-row (XDA2D)

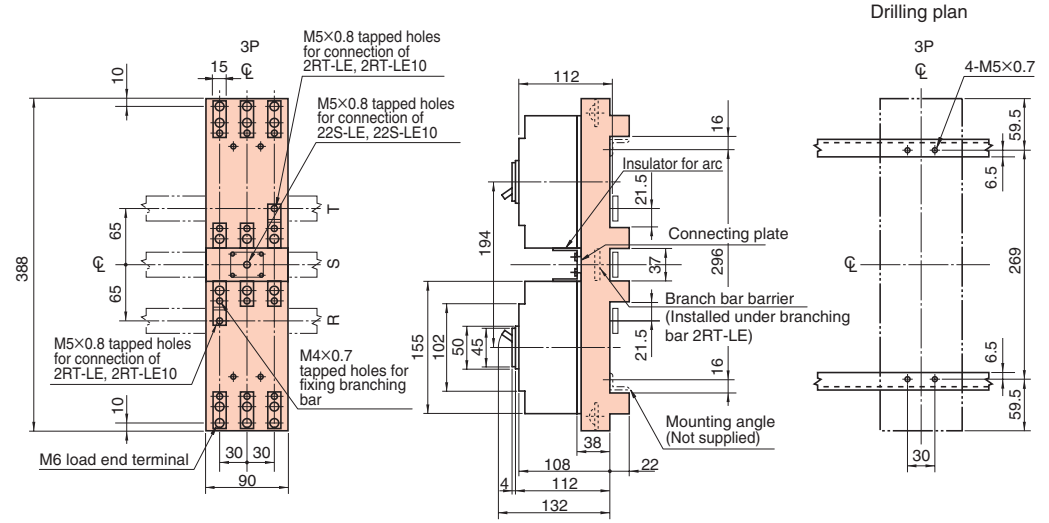

◉Branching bars

*Not supplied

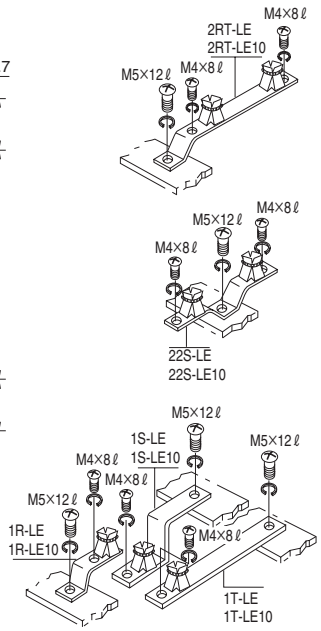

● Outline dimensions for single-row (XDA2S)

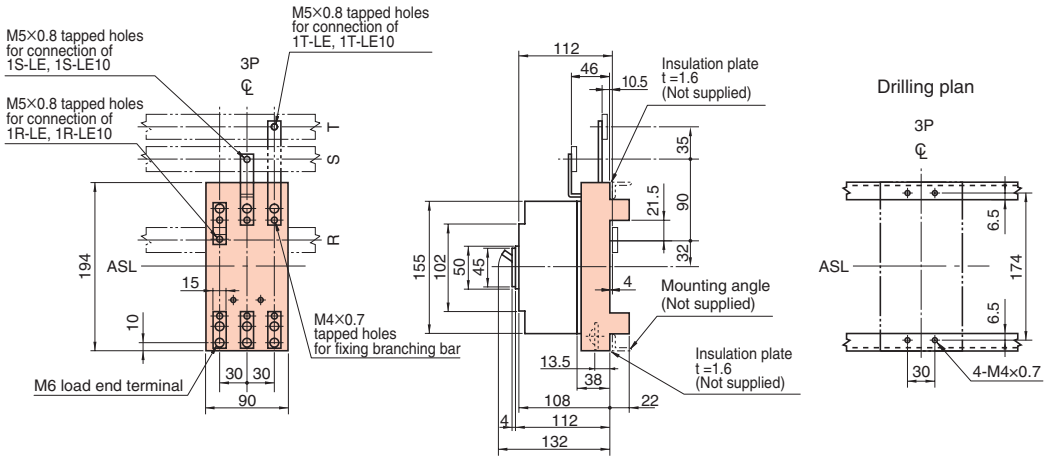

Components / Parts to be purchased				Mounting / connecting screw						Remarks
				Standard			With load end terminal			
	Name	Type	Qty	Size	Qty	Remarks	Size	Qty	Remarks	
For double	Plug-in base	XDA2D	2	M5×25	4	For breaker mounting	M5×25	4	For breaker mounting	For 3-pole breaker
	Branching bar	2RT-LE(t=2)	2	M5×12	2	For busbar connection	M4×8	4	For fixing to plug-in base	15 – 50A
		22S-LE (t=2)	1	M5×12	1	For busbar connection	M4×8	2	For fixing to plug-in base	15 – 50A
		2RT-LE10 (t=3)	2	M5×12	2	For busbar connection	M4×8	4	For fixing to plug-in base	60 – 125A
		22S-LE10 (t=3)	1	M5×12	1	For busbar connection	M4×8	2	For fixing to plug-in base	60 – 125A
	Connecting plate	Connecting plate 3	1	M4×35	4		M4×35	4		
	Insurator for arc	Arc guard 3	1							
	Branching bar barrier	Busbar barrier E	2							
For single	Plug-in base	XDA2S	1	M4×30	4	For breaker mounting			For breaker mounting	For 3-pole breaker
	Branching bar	1R-LE (t=2)	1	M5×12	3	For busbar connection	M4×8	3	For fixing to plug-in base	15 – 50A
		1S-LE (t=2)	1	M5×12	3	For busbar connection	M4×8	3	For fixing to plug-in base	15 – 50A
		1T-LE (t=2)	1	M5×12	3	For busbar connection	M4×8	3	For fixing to plug-in base	15 – 50A
		1R-LE10 (t=3)	1	M5×12	3	For busbar connection	M4×8	3	For fixing to plug-in base	60 – 125A
		1S-LE10 (t=3)	1	M5×12	3	For busbar connection	M4×8	3	For fixing to plug-in base	60 – 125A
		1T-LE10 (t=3)	1	M5×12	3	For busbar connection	M4×8	3	For fixing to plug-in base	60 – 125A

Notes:
1. The number required to form either single or double plug-in base
2. Please specify the type of plug-in base.
3. Branch bars for 10 – 50A and 60 – 125A differ in thickness only. The conductor for 10 – 50A (2mm thick) can be used for applications where the breaker rated current is 50A or less.

◉Connecting plate
【Order code : CP3E】

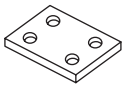

◉Insulator for arc
【Order code : ARC3E】

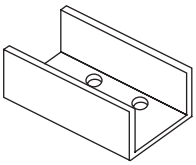

◉Branching bar barrier
【Order code : BARRE】

7 Characteristics and Outline Dimensions

TemBreak PRO

Earth Leakage Circuit Breakers

PZE30-NF, PZE50-NF, PZS30-NF, PZS50-NF

Ratings and Specifications

Frame size (A)			30	50	30	50
Type			PZE30-NF	PZE50-NF	PZS30-NF	PZS50-NF
Number of poles			3	3	3	3
Phase and wires	1ø2W	⑭	●	●	●	●
	3ø3W, 1ø3W	⑮	●	●	●	●
	3ø4W		—	—	—	—
■ Ratings						
Rated impulse withstand voltage〔U_{imp}〕 kV			6	6	6	6
Rated current, A			5 15 30	15 30 50	5 15 30	15 30 50
Calibrated at 40°C			10 20	20 40	10 20	20 40
Rated operational voltage AC V	Instantaneous tripping type		100-440 common	100-440 common	100-440 common	100-440 common
	Operable voltage fluctuation range V		80-484	80-484	80-484	80-484
	Time delay tripping type		—	—	—	—
	Operable voltage fluctuation range V		—	—	—	—
Rated sensitivity current mA	Instantaneous tripping type		15	15 ㉝	15	15 ㉝
			30	30	30	30
			—	100/200/500 selectable ㊶	100/200/500 selectable ㊶	100/200/500 selectable ㊶
	Max. operating time sec		0.1	0.1	0.1	0.1
	Time delay tripping type		—	—	—	—
	Max. operating time sec		—	—	—	—
	Non-operating time sec		—	—	—	—
■ Rated breaking capacity, kA						
JIS C 8201-2-2 Ann.2	AC	440V	1.5	2.5	2.5	7.5
I_{cu}(sym)		415V	1.5	2.5	2.5	7.5
		240V	2.5	7.5	7.5	15
		100V	2.5	7.5	7.5	15
Weight (◉ marked standard type) kg			0.8	0.8	0.8	0.8
■ Connections and Mountings						
Front-connected (FC)	Terminal screws		◉ ㊺	◉ ㊺	◉ ㊺	◉ ㊺
	With extension bars		○ ㊸	○ ㊸	○ ㊸	○ ㊸
Rear-connected (RC)	Flat bar studs		○	○	○	○
Plug-in (PM) For switchboards	High-performance (PMB)		—	—	—	—
	Standard (PMC)		—	—	—	—
For distribution boards (PMD)			—	—	—	—
Flush-mounted (FP)	With flat bar studs		○	○	○	○
Draw-out type (DR)			—	—	—	—
TemPlug70 (PG)			—	—	—	—
DIN rail mount			○ ⑪	○ ⑪	○ ⑪	○ ⑪
■ Accessories (optional)		Symbol				
Externally mounted: Motor operator		M C	—	—	—	—
External operating handle	Breaker-mounted	H B	●	●	●	●
	Door-mounted (variable depth)	H P	●	●	●	●
Toggle extension		H A	—	—	—	—
Mechanical interlock	Slide type	M S	●	●	●	●
	Link type	M L	—	—	—	—
	Wire type	M W	—	—	—	—
Toggle holder		H H	●	●	●	●
Toggle lock		H L	●	●	●	●
Terminal cover	For front-connected	C F	●	●	●	●
	For rear-connected and plug-in	C R	●	●	●	●
Terminal block for lead		T F	●	●	●	●
Door flange		D F	—	—	—	—
CE marking			Non	Non	Non	Non
Earth leakage trip mechanism (Current operation type)			Electronic	Electronic	Electronic	Electronic
Overcurrent trip mechanism			Thermal-magnetic ⑦	Thermal-magnetic	Thermal-magnetic ⑦	Thermal-magnetic
Earth leakage indication			Mechanical button	Mechanical button	Mechanical button	Mechanical button
Colour of cover			Grey Blue	Grey Blue	Grey Blue	Grey Blue
Trip button (Colour)			Yes (Red)	Yes (Red)	Yes (Red)	Yes (Red)
Suitability for isolation			Yes	Yes	Yes	Yes
Reverse connection			Non	Non	Non	Non

Notes:

◉ : Standard. This configuration used unless otherwise specified. ○ : Optional standard. Specify when ordering.
● : "yes" or "available". — : "no" or "not available". ⑦ : Hydraulic-magnetic type for below 10A rating.
⑪ : Please order the DIN rail adapter separately. See page 6-152. ⑭ : When applying 3-pole type to a 1ø2W circuit, use both ends and do not use the central pole. ⑮ : When applying 3-pole type to a 1ø3W circuit, apply voltage to both ends and connect the neutral wire to the central pole. ㉝ : Applicable to 15A to 30A. ㊶ : Not applicable to 20A or less.
㊺ : A wire clamping terminal is provided. ㊸ : For the extension bars, please place the order separately in parts.

Remark: The rated sensitivity current is set to 100mA before delivery.

Time/Current characteristic curves

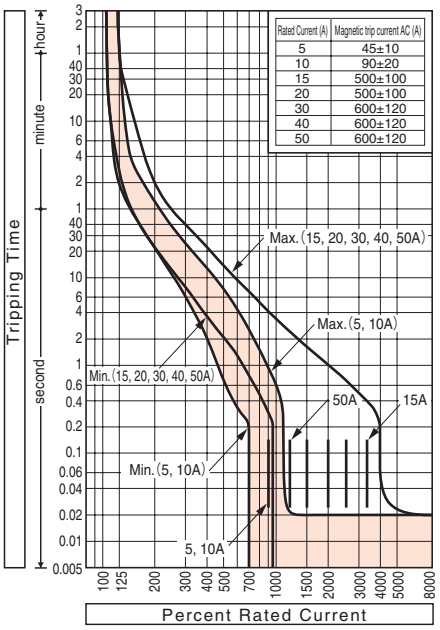

Rated Current (A)	Magnetic trip current AC (A)
5	45±10
10	90±20
15	500±100
20	500±100
30	600±120
40	600±120
50	600±120

Ambient compensating curves

(5, 10A)

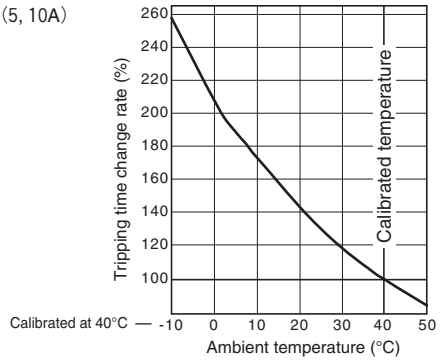

(15—50A)

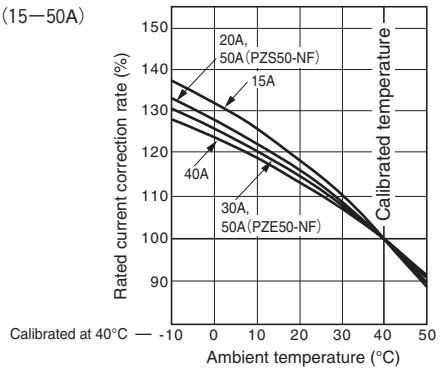

Combinations of Internally Mounted Accessories (Optional)

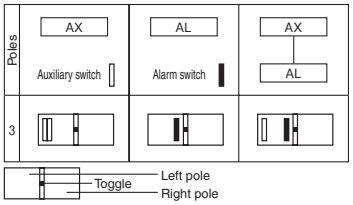

Outline dimensions (mm)

PZE30-NF, PZE50-NF, PZS30-NF, PZS50-NF

Front-connected

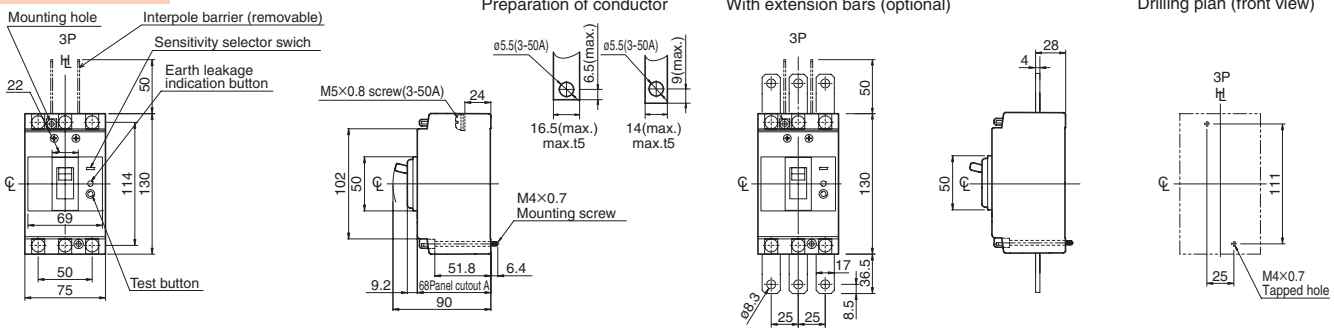

Rear-connected

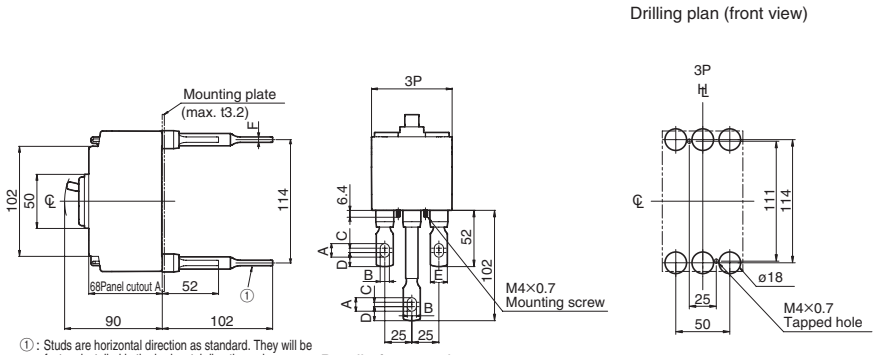

① : Studs are horizontal direction as standard. They will be factory installed in the horizontal direction unless otherwise specified. Vertical position is a special specification. Please specify this when ordering.

Note) If you will arrange the studs vertically, please insulate them carefully with insulating tubes, insulating tape, or similar because the insulation distance between the studs is insufficient.

Detail of connecting part

rated current (A)	A	B	C	D	E	F
3-50	10.5	6.5	4	13	16	4

Panel cutout A (front view)

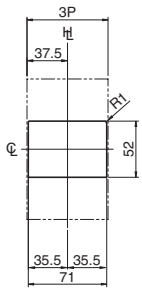

Panel cutout dimensions shown give an allowance of 1.0mm around the handle escutcheon.

Flush-mounted

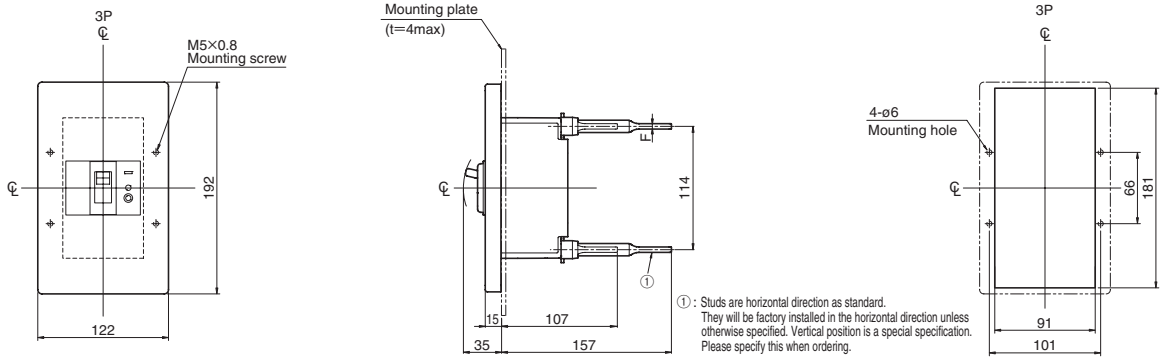

① : Studs are horizontal direction as standard. They will be factory installed in the horizontal direction unless otherwise specified. Vertical position is a special specification. Please specify this when ordering.

rated current (A)	A	B	C	D	E	F
3-50	10.5	6.5	4	13	16	4

Please check the rear side for a detailed outline drawing of the terminals.

Note) If you will arrange the studs vertically, please insulate them carefully with insulating tubes, insulating tape, or similar because the insulation distance between the studs is insufficient.

Earth leakage trip characteristic

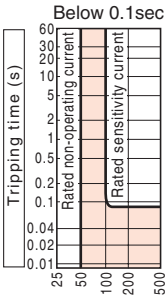

Control circuit

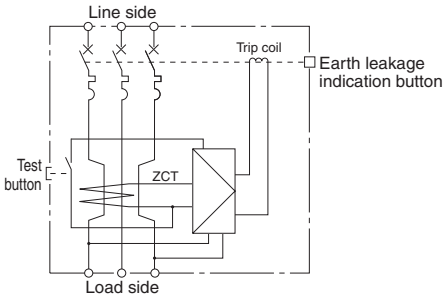

7 Characteristics and Outline Dimensions TemBreak PRO

Earth Leakage Circuit Breakers

ZS50-SF

Ratings and Specifications

Frame size (A)			50			
Type			ZS50-SF			
Number of poles			3			
Phase and wires	1ø2W	⑭	●			
	3ø3W, 1ø3W	⑮	●			
	3ø4W		—			
■ Ratings						
Rated impulse withstand voltage〔U_{imp}〕 kV			8			
Rated current, A			15 30 50			
Calibrated at 40°C			20 40			
Rated operational voltage AC V	Instantaneous tripping type		100-440 common			
	Operable voltage fluctuation range V		80–484			
	Time delay tripping type		100-440 common			
	Operable voltage fluctuation range V		80–484			
Rated sensitivity current mA	Instantaneous tripping type		30			
			100/200/500 selectable			
			—			
	Max. operating time sec		0.1			
	Time delay tripping type		100/200/500 selectable			
	Max. operating time sec		0.45/1.0/2.0 selectable			
	Non-operating time sec		0.1/0.5/1.2 or more			
■ Rated breaking capacity, kA						
JIS C 8201-2-2 Ann.2 I_{cu}(sym)	AC	440V	25			
		415V	30			
		240V	50			
		100V	50			
Weight (◉ marked standard type) kg			0.95			
■ Connections and Mountings						
Front-connected (FC)	Terminal screws		◉ ㊺			
	With extension bars		○ ㊸			
Rear-connected (RC)	Flat bar studs		○			
Plug-in (PM) For switchboards	High-performance (PMB)		—			
	Standard (PMC)		—			
For distribution boards (PMD)			—			
Flush-mounted (FP)	With flat bar studs		○			
Draw-out type (DR)			—			
TemPlug70 (PG)			○			
DIN rail mount			○ ⑪			
■ Accessories (optional)		Symbol				
Externally mounted: Motor operator		M C	—			
External operating handle	Breaker-mounted	H B	●			
	Door-mounted (variable depth)	H P	●			
Toggle extension		H A	—			
Mechanical interlock	Slide type	M S	●			
	Link type	M L	—			
	Wire type	M W	—			
Toggle holder		H H	●			
Toggle lock		H L	●			
Terminal cover	For front-connected	C F	●			
	For rear-connected and plug-in	C R	●			
Terminal block for lead		T F	●			
Door flange		D F	—			
CE marking			Non			
Earth leakage trip mechanism (Current operation type)			Electronic			
Overcurrent trip mechanism			Thermal-magnetic			
Earth leakage indication			Mechanical button			
Colour of cover			Grey Blue			
Trip button (Colour)			Yes (Red)			
Suitability for isolation			Yes			
Reverse connection			Yes ⑫			

Notes:
◉ : Standard. This configuration used unless otherwise specified. ○ : Optional standard. Specify when ordering.
● : "yes" or "available". — : "no" or "not available". ⑪ : Please order the DIN rail adapter separately. See page 6-152.
⑭ : When applying 3-pole type to a 1ø2W circuit, use both ends and do not use the central pole. ⑮ : When applying 3-pole type to a 1ø3W circuit, apply voltage to both ends and connect the neutral wire to the central pole. ㊺ : A wire clamping terminal is provided. ㊸ : For the extension bars, please place the order separately in parts.
⑫ : There are some limitations. See page 5-23 for details.

Remark: The rated sensitivity current is set to 100mA and the time delay tripping type's operating time is set to 0.45 seconds before delivery.

Combinations of Internally Mounted Accessories (Optional)

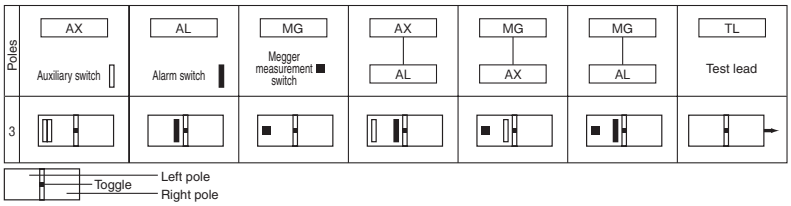

Time/Current characteristic curves

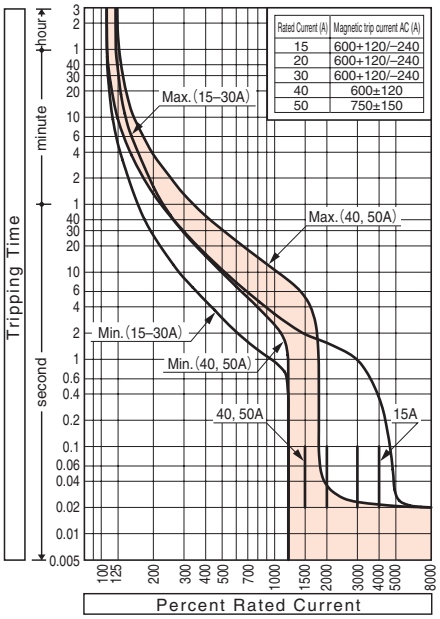

Rated Current (A)	Magnetic trip current AC (A)
15	600+120/–240
20	600+120/–240
30	600+120/–240
40	600±120
50	750±150

Ambient compensating curves

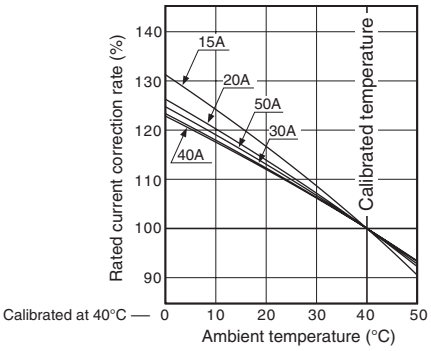

Earth leakage trip characteristic

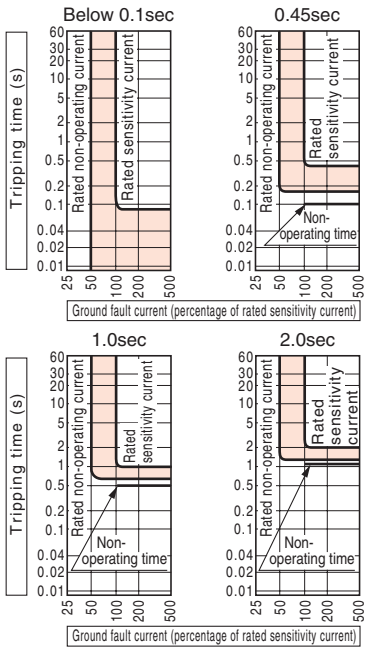

Time delay tripping type will operate on 0.15-0.45sec for 0.45sec, 0.6-1.0sec for 1.0sec, 1.25-2.0sec for 2.0sec.

Outline dimensions (mm) ZS50-SF

Front-connected

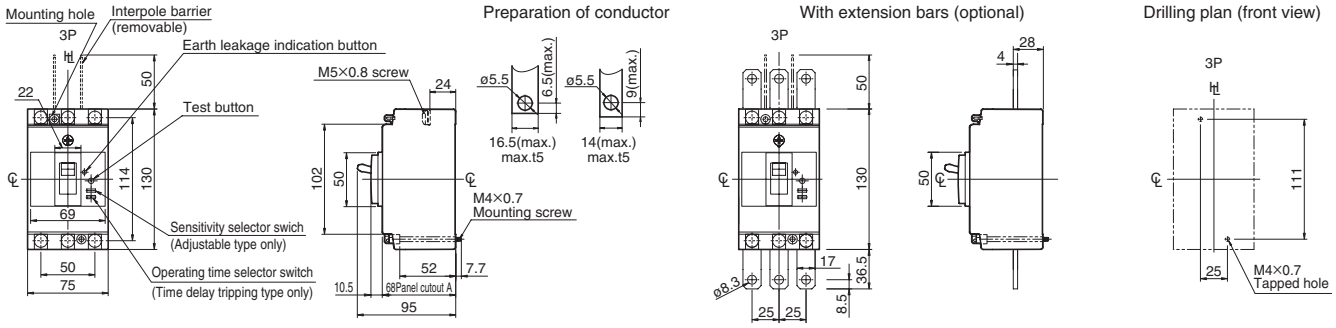

Rear-connected

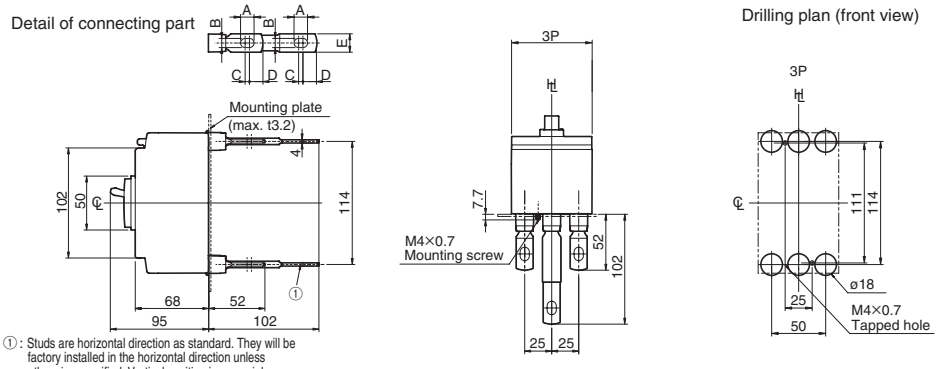

① : Studs are horizontal direction as standard. They will be factory installed in the horizontal direction unless otherwise specified. Vertical position is a special specification. Please specify this when ordering.

Note) If you will arrange the studs vertically, please insulate them carefully with insulating tubes, insulating tape, or similar because the insulation distance between the studs is insufficient.

rated current (A)	A	B	C	D	E
15-50	10.5	6.5	4	13	16

Panel cutout A (front view)

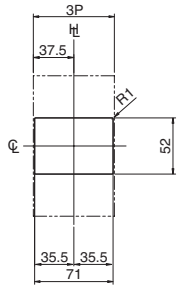

Panel cutout dimensions shown give an allowance of 1.0mm around the handle escutcheon.

Flush-mounted

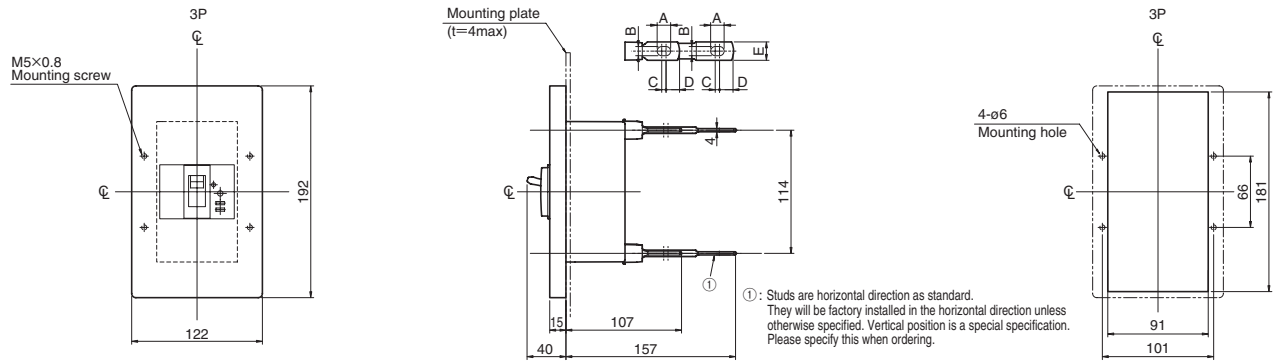

① : Studs are horizontal direction as standard. They will be factory installed in the horizontal direction unless otherwise specified. Vertical position is a special specification. Please specify this when ordering.

rated current (A)	A	B	C	D	E
15-50	10.5	6.5	4	13	16

Note) If you will arrange the studs vertically, please insulate them carefully with insulating tubes, insulating tape, or similar because the insulation distance between the studs is insufficient.

Control circuit

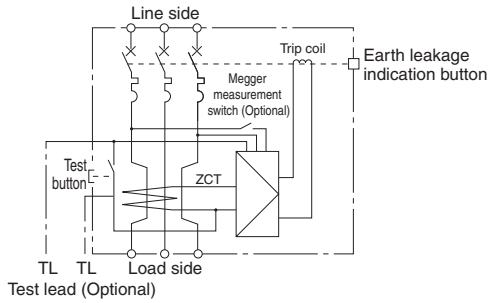

7 Characteristics and Outline Dimensions TemBreak PRO

Earth Leakage Circuit Breakers

PZE60-NF, PZS60-NF, PZE125-NF

Ratings and Specifications

Frame size (A)			60	60	100	125
Type			PZE60-NF	PZS60-NF	PZE125-NF	
Number of poles			3	3	3	3
Phase and wires	1ø2W	⑭	●	●	●	●
	3ø3W, 1ø3W	⑮	●	●	●	●
	3ø4W		—	—	—	—
■ Ratings						
Rated impulse withstand voltage〔U_{imp}〕 kV			6	6	6	6
Rated current, A Calibrated at 40°C			60	60	60 75 100	125
Rated operational voltage AC V	Instantaneous tripping type		100-440 common	100-440 common	100-440 common	100-440 common
	Operable voltage fluctuation range V		80-484	80-484	80-484	80-484
	Time delay tripping type		—	—	—	—
	Operable voltage fluctuation range V		—	—	—	—
Rated sensitivity current mA	Instantaneous tripping type		30	30	30	30
			100/200/500 selectable	100/200/500 selectable	100/200/500 selectable	100/200/500 selectable
			—	—	—	—
	Max. operating time sec		0.1	0.1	0.1	0.1
	Time delay tripping type		—	—	—	—
	Max. operating time sec		—	—	—	—
	Non-operating time sec		—	—	—	—
■ Rated breaking capacity, kA						
JIS C 8201-2-2 Ann.2 I_{cu}(sym)	AC	440V	2.5	10	10	10
		415V	2.5	10	10	10
		240V	7.5	30	30	30
		100V	7.5	30	30	30
Weight (◉ marked standard type) kg			0.9	0.9	0.9	0.9
■ Connections and Mountings						
Front-connected (FC)	Terminal screws		◉	◉	◉	◉
	With extension bars		○ ⑤③	○ ⑤③	○ ⑤③	○ ⑤③
Rear-connected (RC)	Flat bar studs		○	○	○	○
Plug-in (PM) For switchboards	High-performance (PMB)		—	—	—	—
	Standard (PMC)		—	—	—	—
For distribution boards (PMD)			—	—	—	—
Flush-mounted (FP)	With flat bar studs		○	○	○	○
Draw-out type (DR)			—	—	—	—
TemPlug70 (PG)			—	—	—	—
DIN rail mount			○ ⑪	○ ⑪	○ ⑪	○ ⑪
■ Accessories (optional)		Symbol				
Externally mounted: Motor operator		M C	—	—	—	—
External operating handle	Breaker-mounted	H B	●	●	●	●
	Door-mounted (variable depth)	H P	●	●	●	●
Toggle extension		H A	—	—	—	—
Mechanical interlock	Slide type	M S	●	●	●	●
	Link type	M L	—	—	—	—
	Wire type	MW	—	—	—	—
Toggle holder		H H	●	●	●	●
Toggle lock		H L	●	●	●	●
Terminal cover	For front-connected	C F	●	●	●	●
	For rear-connected and plug-in	C R	●	●	●	●
Terminal block for lead		T F	●	●	●	●
Door flange		D F	—	—	—	—
CE marking			Non	Non	Non	Non
Earth leakage trip mechanism (Current operation type)			Electronic	Electronic	Electronic	Electronic
Overcurrent trip mechanism			Thermal-magnetic	Thermal-magnetic	Thermal-magnetic	Thermal-magnetic
Earth leakage indication			Mechanical button	Mechanical button	Mechanical button	Mechanical button
Colour of cover			Grey Blue	Grey Blue	Grey Blue	Grey Blue
Trip button (Colour)			Yes (Red)	Yes (Red)	Yes (Red)	Yes (Red)
Suitability for isolation			Yes	Yes	Yes	Yes
Reverse connection			Non	Non	Non	Non

Notes:

◉ : Standard. This configuration used unless otherwise specified. ○ : Optional standard. Specify when ordering.
● : "yes" or "available". — : "no" or "not available". ⑪ : Please order the DIN rail adapter separately. See page 6-152.
⑭ : When applying 3-pole type to a 1ø2W circuit, use both ends and do not use the central pole. ⑮ : When applying 3-pole type to a 1ø3W circuit, apply voltage to both ends and connect the neutral wire to the central pole. ⑤③ : For the extension bars, please place the order separately in parts.

Time/Current characteristic curves

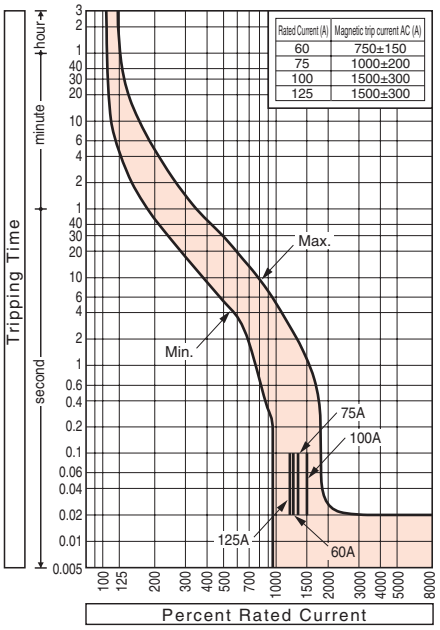

Ambient compensating curves

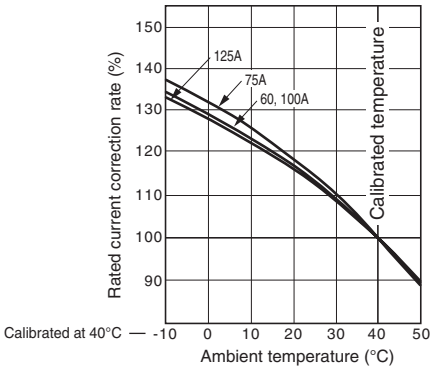

Combinations of Internally Mounted Accessories (Optional)

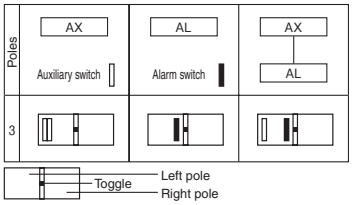

Outline dimensions (mm) — PZE60-NF, PZS60-NF, PZE125-NF

Front-connected

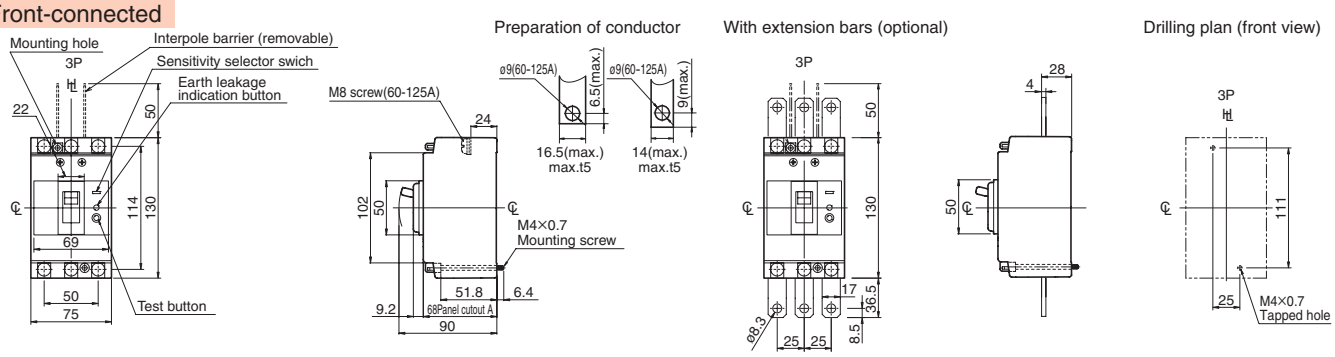

Rear-connected

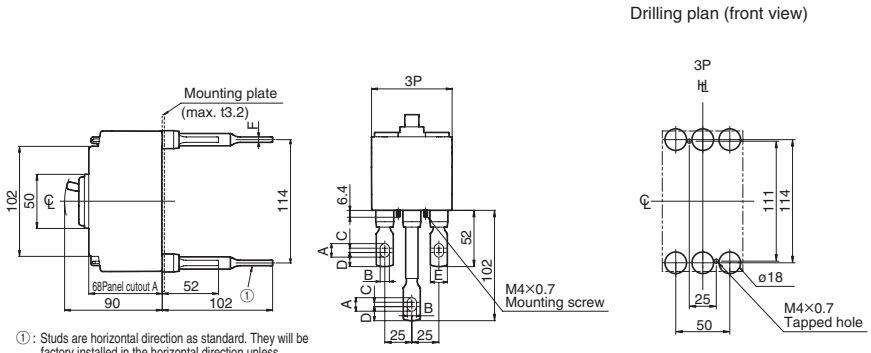

① : Studs are horizontal direction as standard. They will be factory installed in the horizontal direction unless otherwise specified. Vertical position is a special specification. Please specify this when ordering.

Note) If you will arrange the studs vertically, please insulate them carefully with insulating tubes, insulating tape, or similar because the insulation distance between the studs is insufficient.

Detail of connecting part

rated current (A)	A	B	C	D	E	F
60-125	12.5	8.5	4	13	16	5

Panel cutout A (front view)

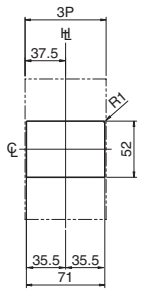

Panel cutout dimensions shown give an allowance of 1.0mm around the handle escutcheon.

Flush-mounted

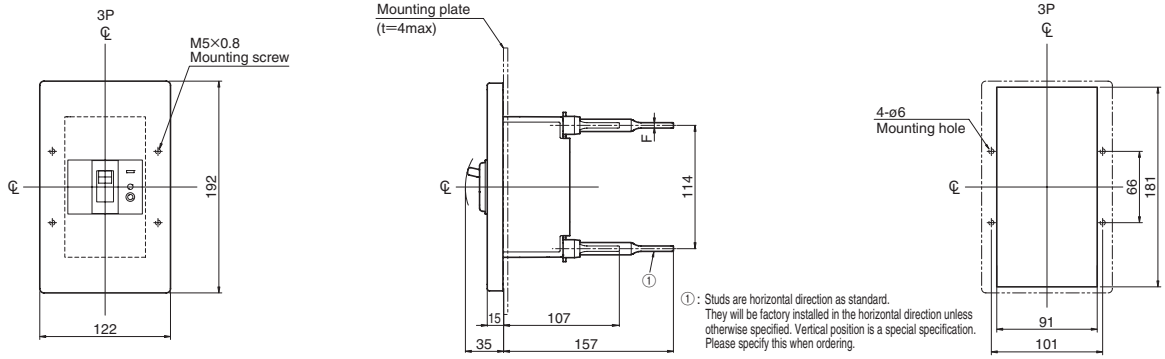

① : Studs are horizontal direction as standard. They will be factory installed in the horizontal direction unless otherwise specified. Vertical position is a special specification. Please specify this when ordering.

rated current (A)	A	B	C	D	E	F
60-125	12.5	8.5	4	13	16	5

Please check the rear side for a detailed outline drawing of the terminals.

Note) If you will arrange the studs vertically, please insulate them carefully with insulating tubes, insulating tape, or similar because the insulation distance between the studs is insufficient.

Earth leakage trip characteristic

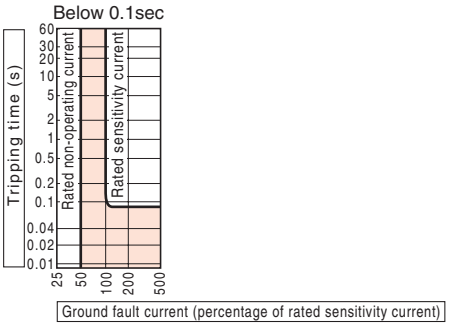

Control circuit

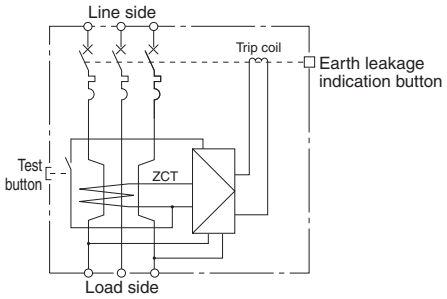

7 Characteristics and Outline Dimensions TemBreak PRO

Earth Leakage Circuit Breakers

ZS125-SF

Ratings and Specifications

Frame size (A)		100	125	
Type		ZS125-SF		
Number of poles		3	3	
Phase and wires	1ø2W ⑭	●	●	
	3ø3W, 1ø3W ⑮	●	●	
	3ø4W	—	—	
■ Ratings				
Rated impulse withstand voltage〔U_{imp}〕 kV		8	8	
Rated current, A Calibrated at 40°C		15 40 75 20 50 100 30 60	125	
Rated operational voltage AC V	Instantaneous tripping type	100-440 common	100-440 common	
	Operable voltage fluctuation range V	80–484	80–484	
	Time delay tripping type	100-440 common	100-440 common	
	Operable voltage fluctuation range V	80–484	80–484	
Rated sensitivity current mA	Instantaneous tripping type	30	30	
		100/200/500 selectable	100/200/500 selectable	
		—	—	
	Max. operating time sec	0.1	0.1	
	Time delay tripping type	100/200/500 selectable	100/200/500 selectable	
	Max. operating time sec	0.45/1.0/2.0 selectable	0.45/1.0/2.0 selectable	
	Non-operating time sec	0.1/0.5/1.2 or more	0.1/0.5/1.2 or more	
■ Rated breaking capacity, kA				
JIS C 8201-2-2 Ann.2 I_{cu}(sym) AC	440V	25	25	
	415V	30	30	
	240V	50	50	
	100V	50	50	
Weight (◉ marked standard type) kg		0.95	0.95	
■ Connections and Mountings				
Front-connected (FC)	Terminal screws	◉ ④	◉	
	With extension bars	○ ㊸	○ ㊸	
Rear-connected (RC)	Flat bar studs	○	○	
Plug-in (PM) For switchboards	High-performance (PMB)	—	—	
	Standard (PMC)	—	—	
For distribution boards (PMD)		—	—	
Flush-mounted (FP)	With flat bar studs	○	○	
Draw-out type (DR)		—	—	
TemPlug70 (PG)		○	○	
DIN rail mount		○ ⑪	○ ⑪	
■ Accessories (optional)	Symbol			
Externally mounted: Motor operator	M C	—	—	
External operating handle	Breaker-mounted H B	●	●	
	Door-mounted (variable depth) H P	●	●	
Toggle extension	H A	—	—	
Mechanical interlock	Slide type M S	●	●	
	Link type M L	—	—	
	Wire type M W	—	—	
Toggle holder	H H	●	●	
Toggle lock	H L	●	●	
Terminal cover	For front-connected C F	●	●	
	For rear-connected and plug-in C R	●	●	
Terminal block for lead	T F	●	●	
Door flange	D F	—	—	
CE marking		Non	Non	
Earth leakage trip mechanism (Current operation type)		Electronic	Electronic	
Overcurrent trip mechanism		Thermal-magnetic	Thermal-magnetic	
Earth leakage indication		Mechanical button	Mechanical button	
Colour of cover		Grey Blue	Grey Blue	
Trip button (Colour)		Yes (Red)	Yes (Red)	
Suitability for isolation		Yes	Yes	
Reverse connection		Yes ⑫	Yes ⑫	

Notes:
◉ : Standard. This configuration used unless otherwise specified. ○ : Optional standard. Specify when ordering.
● : "yes" or "available". — : "no" or "not available". ④ : 50A or less is the M5 wire clamping terminal. ⑪ : Please order the DIN rail adapter separately. See page 6-152. ⑭ : When applying 3-pole type to a 1ø2W circuit, use both ends and do not use the central pole. ⑮ : When applying 3-pole type to a 1ø3W circuit, apply voltage to both ends and connect the neutral wire to the central pole. ㊸ : For the extension bars, please place the order separately in parts.
⑫ : There are some limitations. See page 5-23 for details.

Time/Current characteristic curves

15-50A

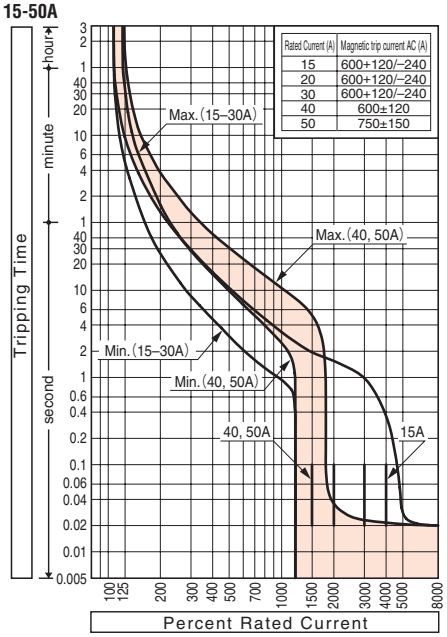

60-125A

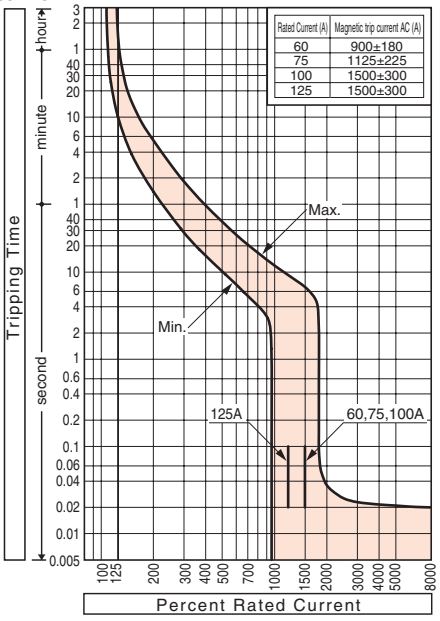

Ambient compensating curves

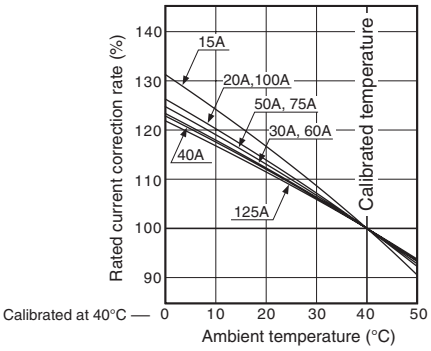

Combinations of Internally Mounted Accessories (Optional)

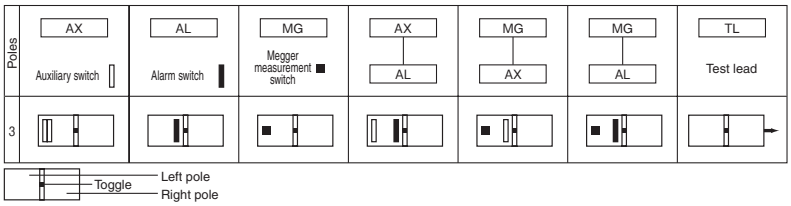

Outline dimensions (mm) ZS125-SF

Front-connected

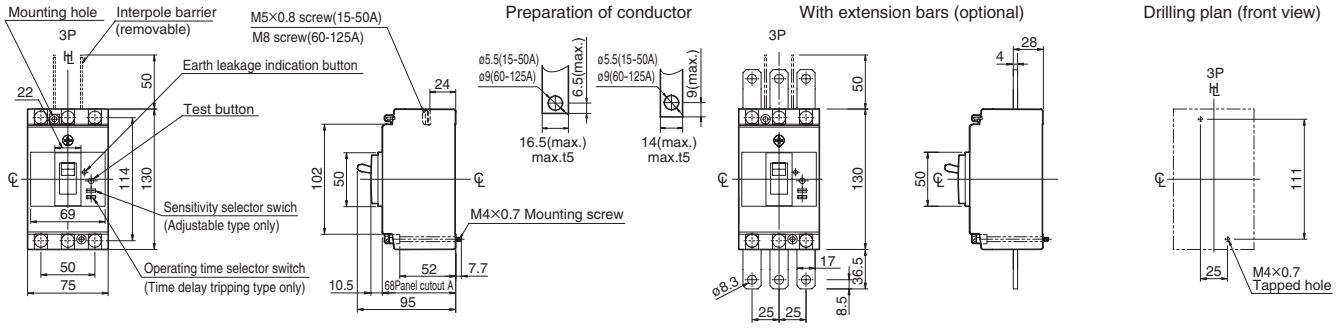

Rear-connected

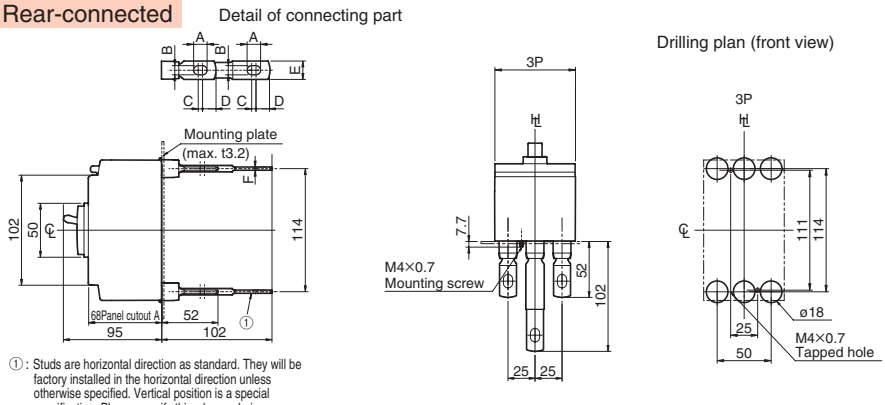

① : Studs are horizontal direction as standard. They will be factory installed in the horizontal direction unless otherwise specified. Vertical position is a special specification. Please specify this when ordering.

Note) If you will arrange the studs vertically, please insulate them carefully with insulating tubes, insulating tape, or similar because the insulation distance between the studs is insufficient.

rated current (A)	A	B	C	D	E	F
15-50	10.5	6.5	4	13	16	4
60-125	12.5	8.5	4	13	16	5

Panel cutout A (front view)

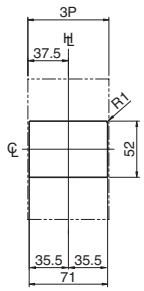

Panel cutout dimensions shown give an allowance of 1.0mm around the handle escutcheon.

Flush-mounted

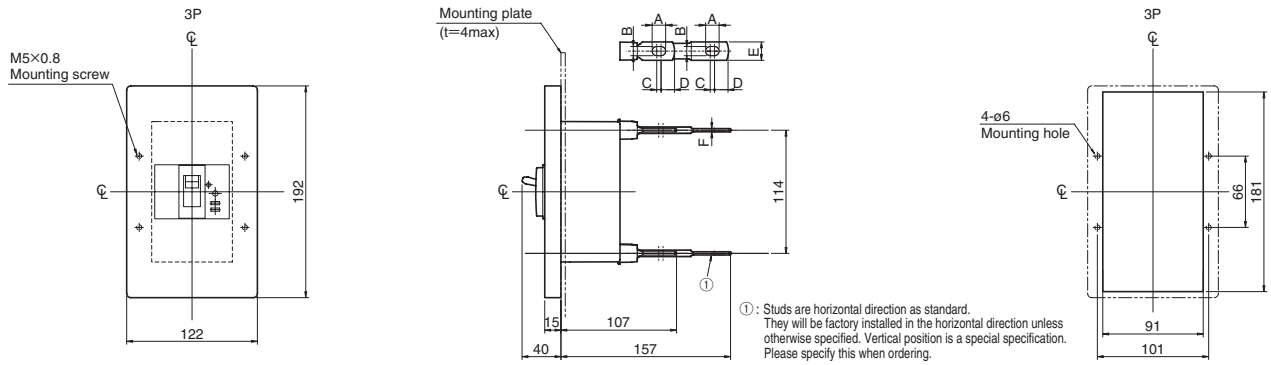

① : Studs are horizontal direction as standard. They will be factory installed in the horizontal direction unless otherwise specified. Vertical position is a special specification. Please specify this when ordering.

rated current (A)	A	B	C	D	E	F
15-50	10.5	6.5	4	13	16	4
60-125	12.5	8.5	4	13	16	5

Note) If you will arrange the studs vertically, please insulate them carefully with insulating tubes, insulating tape, or similar because the insulation distance between the studs is insufficient.

Earth leakage trip characteristic

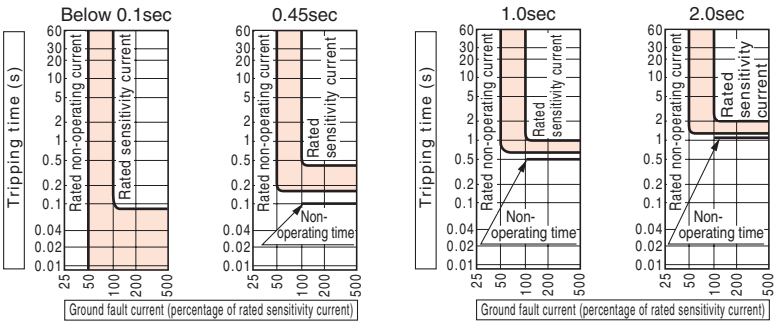

(Time delay tripping type will operate on 0.15-0.45sec for 0.45sec, 0.6-1.0sec for 1.0sec, 1.25-2.0sec for 2.0sec.)

Control circuit

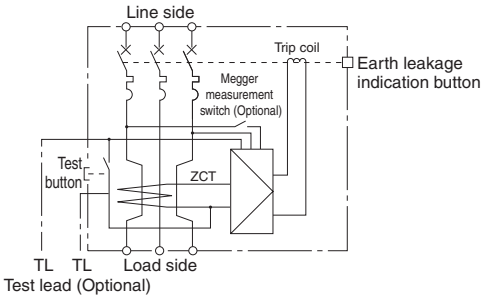

7 Characteristics and Outline Dimensions TemBreak PRO

Earth Leakage Circuit Breakers

ZS100-GF

Ratings and Specifications

Frame size (A)			100	
Type			ZS100-GF	
Number of poles			3	4
Phase and wires	1ø2W	⑭	●	—
	3ø3W, 1ø3W	⑮	●	—
	3ø4W		—	●
■ Ratings				
Rated impulse withstand voltage〔U_{imp}〕 kV			8	
Rated current, A Calibrated at 40°C			15 40 75 20 50 100 30 60	
Rated operational voltage AC V	Instantaneous tripping type		100-440 common	
	Operable voltage fluctuation range V		80–484	
	Time delay tripping type		100-440 common	
	Operable voltage fluctuation range V		80–484	
Rated sensitivity current mA	Instantaneous tripping type		30 100/200/500 selectable	
	Max. operating time sec		0.1	
	Time delay tripping type		100/200/500 selectable	
	Max. operating time sec		0.45/1.0/2.0 selectable	
	Non-operating time sec		0.1/0.5/1.2 or more	
■ Rated breaking capacity, kA				
JIS C 8201-2-2 Ann.2 I_{cu}(sym)	AC	440V	50	
		415V	65	
		240V	85	
		100V	85	
Weight (◉ marked standard type) kg			1.3	1.7
■ Connections and Mountings				
Front-connected (FC)	Terminal screws		◉	
	With extension bars		○ ㊸	
Rear-connected (RC)	Flat bar studs		○	
Plug-in (PM) For switchboards	High-performance (PMB)		—	
	Standard (PMC)		—	
For distribution boards (PMD)			—	
Flush-mounted (FP)	With flat bar studs		○	
Draw-out type (DR)			—	
TemPlug70 (PG)			○	—
DIN rail mount			○ ⑪	
■ Accessories (optional)		Symbol		
Externally mounted: Motor operator		M C	●	
External operating handle	Breaker-mounted	H B	●	
	Door-mounted (variable depth)	H P	●	
Toggle extension		H A	—	
Mechanical interlock	Slide type	M S	●	
	Link type	M L	—	
	Wire type	MW	—	
Toggle holder		H H	●	
Toggle lock		H L	●	
Terminal cover	For front-connected	C F	●	
	For rear-connected and plug-in	C R	●	
Terminal block for lead		T F	●	
Door flange		D F	—	
CE marking			Non	
Earth leakage trip mechanism (Current operation type)			Electronic	
Overcurrent trip mechanism			Thermal-magnetic	
Earth leakage indication			Mechanical button	
Colour of cover			Grey Blue	
Trip button (Colour)			Yes (Red)	
Suitability for isolation			Yes	
Reverse connection			Yes ⑫	

Notes:

◉ : Standard. This configuration used unless otherwise specified.

○ : Optional standard. Specify when ordering. ● : "yes" or "available". — : "no" or "not available".

⑪ : Please order the DIN rail adapter separately. See page 6-152. ⑭ : When applying 3-pole type to a 1ø2W circuit, use both ends and do not use the central pole. ⑮ : When applying 3-pole type to a 1ø3W circuit, apply voltage to both ends and connect the neutral wire to the central pole. ㊸ : For the extension bars, please place the order separately in parts.

⑫ : There are some limitations. See page 5-23 for details.

Remark: The rated sensitivity current is set to 100mA and the time delay tripping type's operating time is set to 0.45 seconds before delivery.

Combinations of Internally Mounted Accessories (Optional)

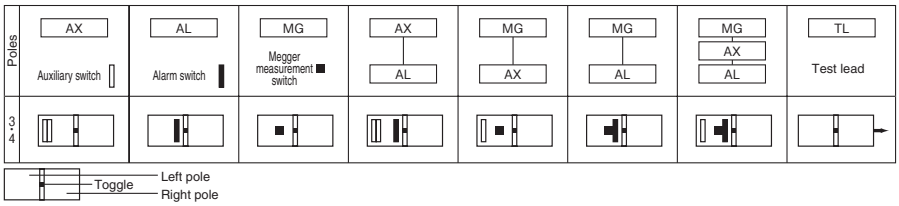

Time/Current characteristic curves

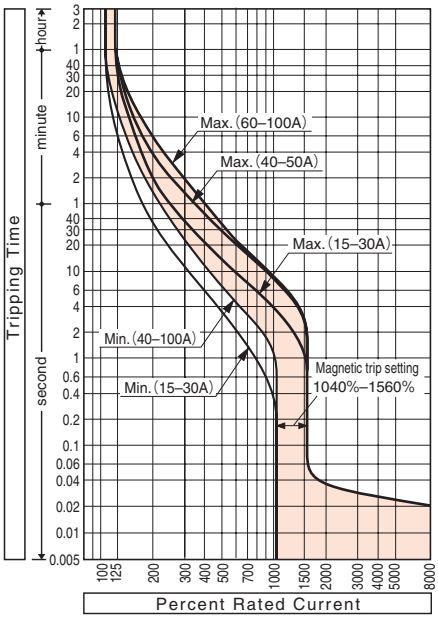

Ambient compensating curves

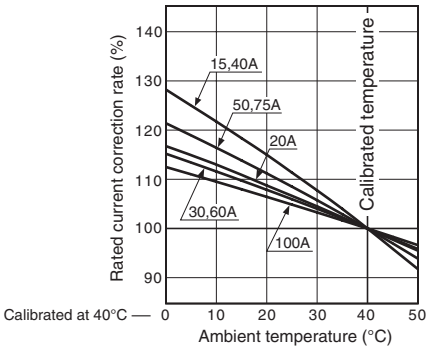

Earth leakage trip characteristic

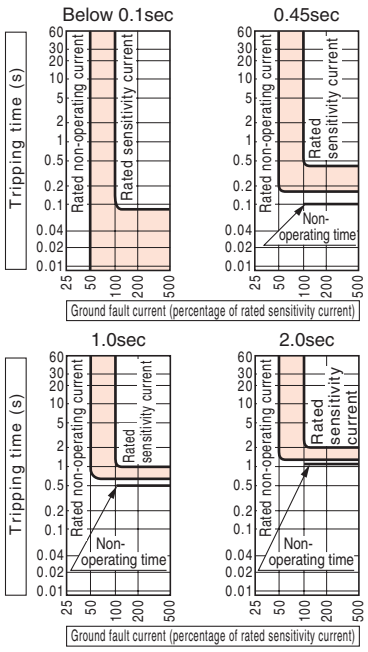

Time delay tripping type will operate on 0.15-0.45sec for 0.45sec, 0.6-1.0sec for 1.0sec, 1.25-2.0sec for 2.0sec.

Outline dimensions (mm) ZS100-GF

Front-connected

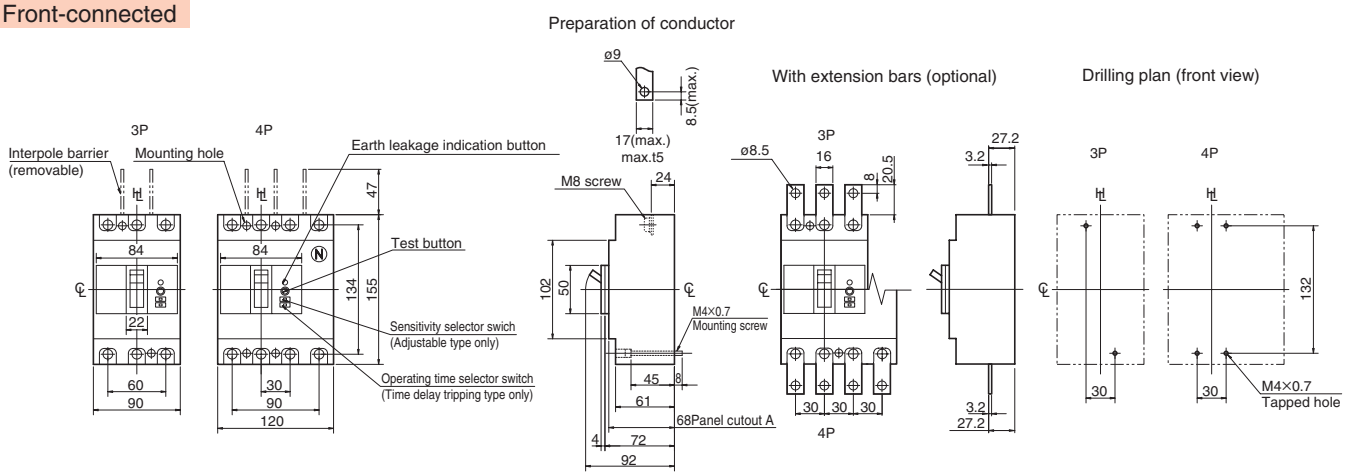

Rear-connected

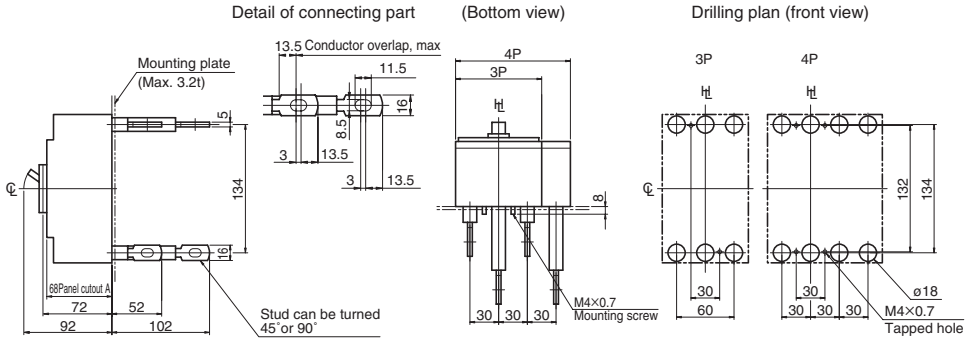

Note: Studs are factory installed in horizontal direction both on the line and load sides.

Panel cutout A (front view)

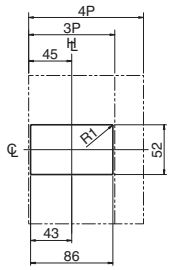

Panel cutout dimensions shown give an allowance of 1.0mm around the handle escutcheon.

Flush-mounted

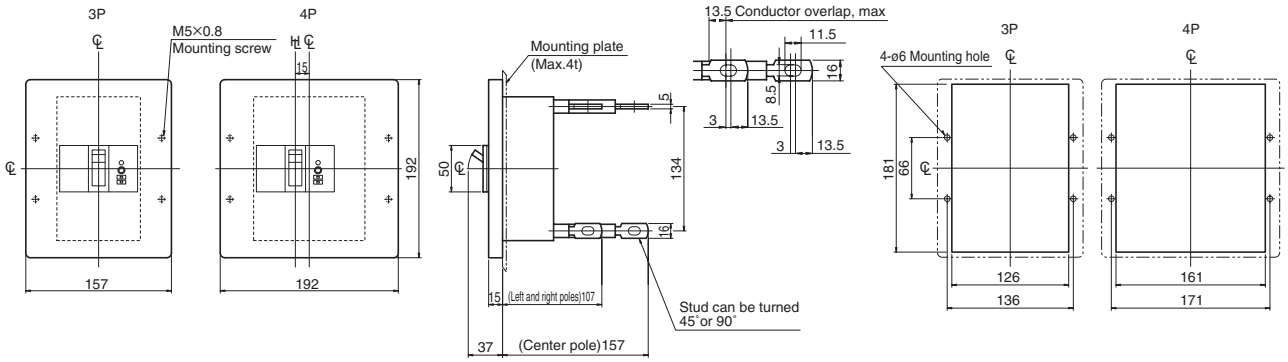

Note: Studs are factory installed in horizontal direction both on the line and load sides.

Control circuit

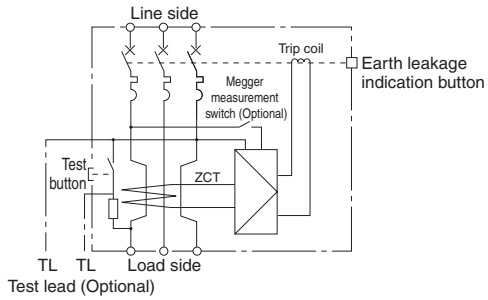

7 Characteristics and Outline Dimensions TemBreak PRO

Earth Leakage Circuit Breakers

ZS125-GF

Ratings and Specifications

Frame size (A)			125	
Type			ZS125-GF	
Number of poles			3	4
Phase and wires	1ø2W	⑭	●	—
	3ø3W, 1ø3W	⑮	●	—
	3ø4W		—	●
■ Ratings				
Rated impulse withstand voltage〔U_{imp}〕 kV			8	
Rated current, A Calibrated at 40°C			125	
Rated operational voltage AC V	Instantaneous tripping type		100-440 common	
	Operable voltage fluctuation range V		80–484	
	Time delay tripping type		100-440 common	
	Operable voltage fluctuation range V		80–484	
Rated sensitivity current mA	Instantaneous tripping type		30	
			100/200/500 selectable	
	Max. operating time sec		0.1	
	Time delay tripping type		100/200/500 selectable	
	Max. operating time sec		0.45/1.0/2.0 selectable	
	Non-operating time sec		0.1/0.5/1.2 or more	
■ Rated breaking capacity, kA				
JIS C 8201-2-2 Ann.2 I_{cu}(sym)	AC	440V	50	
		415V	65	
		240V	85	
		100V	85	
Weight (◉ marked standard type) kg			1.3	1.7
■ Connections and Mountings				
Front-connected (FC)	Terminal screws		◉	
	With extension bars		○ ⑤③	
Rear-connected (RC)	Flat bar studs		○	
Plug-in (PM) For switchboards	High-performance (PMB)		—	
	Standard (PMC)		—	
For distribution boards (PMD)			—	
Flush-mounted (FP)	With flat bar studs		○	
Draw-out type (DR)			—	
TemPlug70 (PG)			○	—
DIN rail mount			○ ⑪	
■ Accessories (optional)		Symbol		
Externally mounted: Motor operator		M C	●	
External operating handle	Breaker-mounted	H B	●	
	Door-mounted (variable depth)	H P	●	
Toggle extension		H A	—	
Mechanical interlock	Slide type	M S	●	
	Link type	M L	—	
	Wire type	MW	—	
Toggle holder		H H	●	
Toggle lock		H L	●	
Terminal cover	For front-connected	C F	●	
	For rear-connected and plug-in	C R	●	
Terminal block for lead		T F	●	
Door flange		D F	—	
CE marking			Non	
Earth leakage trip mechanism (Current operation type)			Electronic	
Overcurrent trip mechanism			Thermal-magnetic	
Earth leakage indication			Mechanical button	
Colour of cover			Grey Blue	
Trip button (Colour)			Yes (Red)	
Suitability for isolation			Yes	
Reverse connection			Yes ⑫	

Notes:

◉ : Standard. This configuration used unless otherwise specified.

○ : Optional standard. Specify when ordering. ● : "yes" or "available". — : "no" or "not available".

⑪ : Please order the DIN rail adapter separately. See page 6-152. ⑭ : When applying 3-pole type to a 1ø2W circuit, use both ends and do not use the central pole. ⑮ : When applying 3-pole type to a 1ø3W circuit, apply voltage to both ends and connect the neutral wire to the central pole. ⑤③ : For the extension bars, please place the order separately in parts.

⑫ : There are some limitations. See page 5-23 for details.

Remark: The rated sensitivity current is set to 100mA and the time delay tripping type's operating time is set to 0.45 seconds before delivery.

Combinations of Internally Mounted Accessories (Optional)

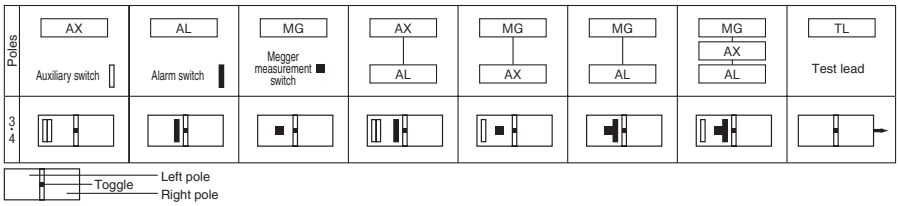

Time/Current characteristic curves

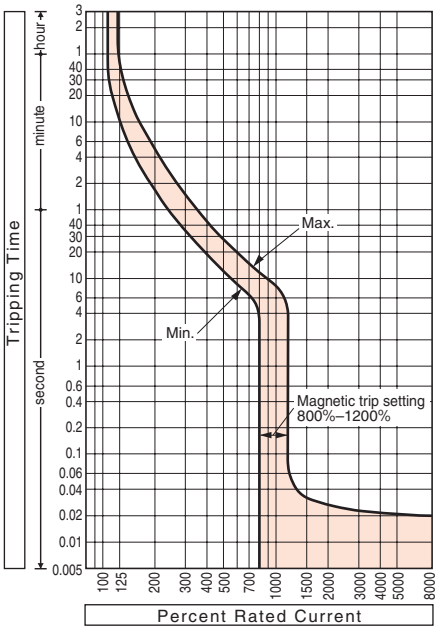

Ambient compensating curves

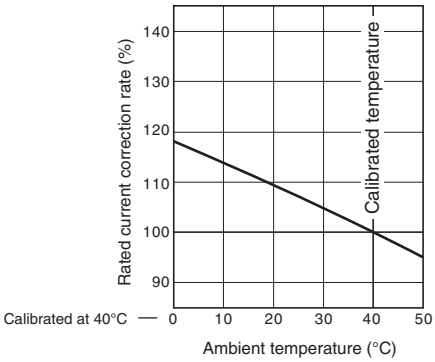

Earth leakage trip characteristic

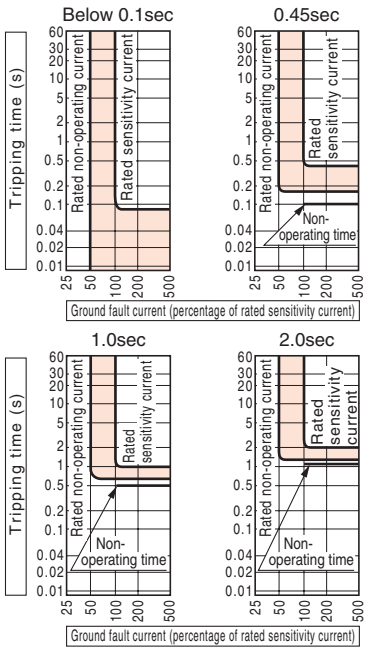

Time delay tripping type will operate on 0.15-0.45sec for 0.45sec, 0.6-1.0sec for 1.0sec, 1.25-2.0sec for 2.0sec.

Outline dimensions (mm) ZS125-GF

Front-connected

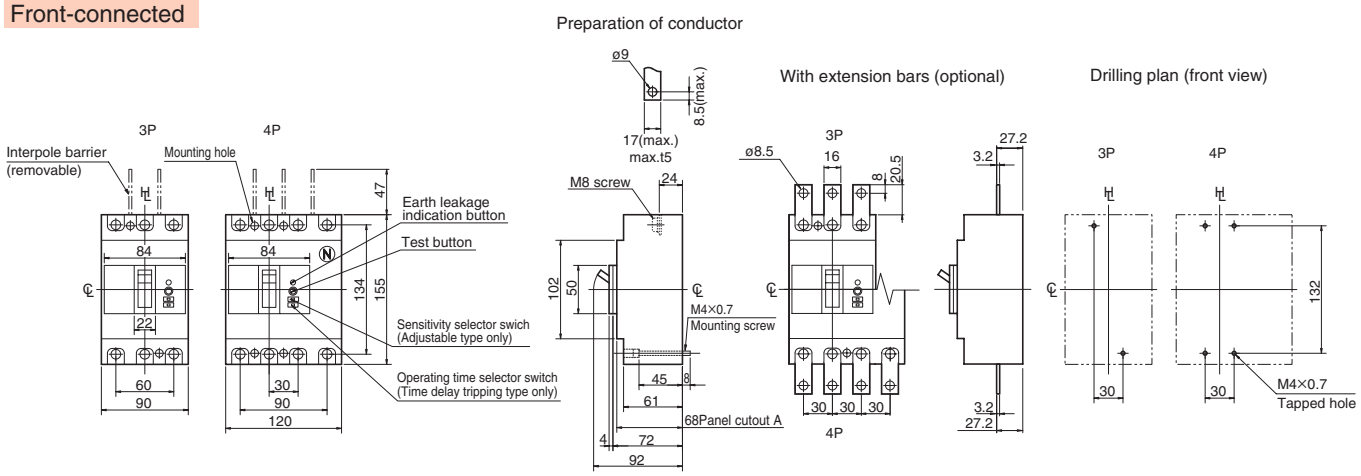

Rear-connected

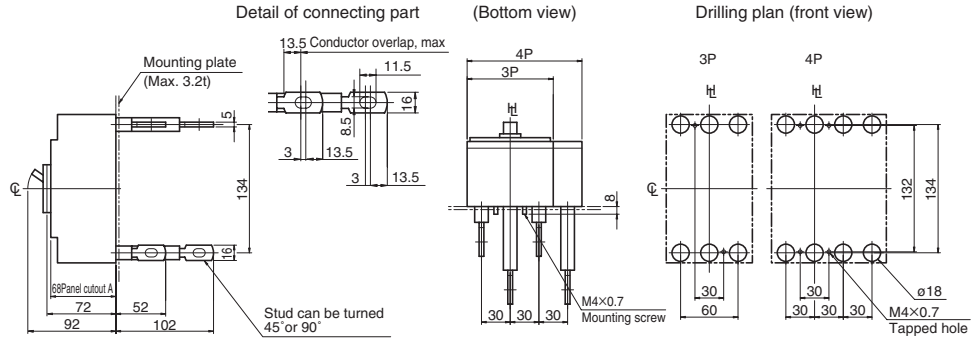

Note: Studs are factory installed in horizontal direction both on the line and load sides.

Panel cutout A (front view)

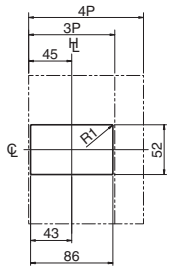

Panel cutout dimensions shown give an allowance of 1.0mm around the handle escutcheon.

Flush-mounted

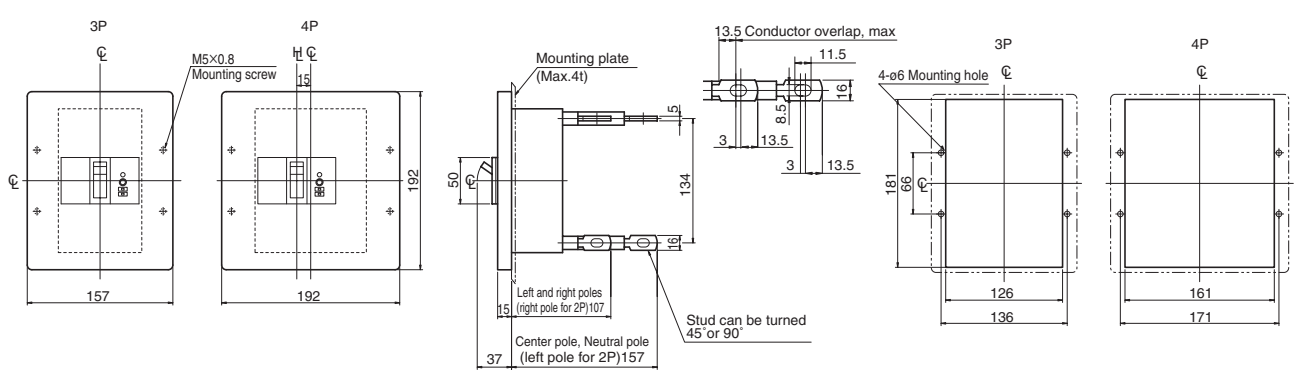

Note: Studs are factory installed in horizontal direction both on the line and load sides.

Control circuit

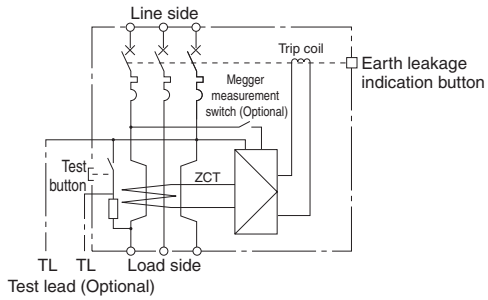

7 Characteristics and Outline Dimensions TemBreak PRO

Earth Leakage Circuit Breakers

ZE250-SF, ZS250-SF

Ratings and Specifications

Frame size (A)			225	250	225	250
Type			ZE250-SF		ZS250-SF	
Number of poles			3	3	3	3
Phase and wires	1ø2W	⑭	●	●	●	●
	3ø3W, 1ø3W	⑮	●	●	●	●
	3ø4W		—	—	—	—
■ Ratings						
Rated impulse withstand voltage〔U_{imp}〕 kV			8	8	8	8
Rated current, A Calibrated at 40°C			125 175 225 150 200	250	125 175 225 150 200	250
			100-440 common	100-440 common	100-440 common	100-440 common
Rated operational voltage AC V	Instantaneous tripping type		80–484	80–484	80–484	80–484
	Operable voltage fluctuation range V		100-440 common	100-440 common	100-440 common	100-440 common
	Time delay tripping type		80–484	80–484	80–484	80–484
	Operable voltage fluctuation range V		30	30	30	30
Rated sensitivity current mA	Instantaneous tripping type		100/200/500 selectable	100/200/500 selectable	100/200/500 selectable	100/200/500 selectable
			—	—	—	—
	Max. operating time sec		0.1	0.1	0.1	0.1
	Time delay tripping type		100/200/500 selectable	100/200/500 selectable	100/200/500 selectable	100/200/500 selectable
	Max. operating time sec		0.45/1.0/2.0 selectable	0.45/1.0/2.0 selectable	0.45/1.0/2.0 selectable	0.45/1.0/2.0 selectable
	Non-operating time sec		0.1/0.5/1.2 or more	0.1/0.5/1.2 or more	0.1/0.5/1.2 or more	0.1/0.5/1.2 or more
■ Rated breaking capacity, kA						
JIS C 8201-2-2 Ann.2 I_{cu}(sym)	AC	440V	15	15	30	30
		415V	25	25	40	40
		240V	35	35	85	85
		100V	35	35	85	85
Weight (◉ marked standard type) kg			1.7	1.7	1.7	1.7
■ Connections and Mountings						
Front-connected (FC)	Terminal screws		◉	◉	◉	◉
	With extension bars		○ ㊸	○ ㊸	○ ㊸	○ ㊸
Rear-connected (RC)	Flat bar studs		○	○	○	○
Plug-in (PM) For switchboards	High-performance (PMB)		—	—	—	—
	Standard (PMC)		—	—	—	—
For distribution boards (PMD)			—	—	—	—
Flush-mounted (FP)	With flat bar studs		○	○	○	○
Draw-out type (DR)			—	—	—	—
TemPlug70 (PG)			○	○	○	○
DIN rail mount			—	—	—	—
■ Accessories (optional)		Symbol				
Externally mounted: Motor operator		M C	●	●	●	●
External operating handle	Breaker-mounted	H B	●	●	●	●
	Door-mounted (variable depth)	H P	●	●	●	●
Toggle extension		H A	—	—	—	—
Mechanical interlock	Slide type	M S	●	●	●	●
	Link type	M L	—	—	—	—
	Wire type	M W	—	—	—	—
Toggle holder		H H	●	●	●	●
Toggle lock		H L	●	●	●	●
Terminal cover	For front-connected	C F	●	●	●	●
	For rear-connected and plug-in	C R	●	●	●	●
Terminal block for lead		T F	●	●	●	●
Door flange		D F	—	—	—	—
CE marking			Non	Non	Non	Non
Earth leakage trip mechanism (Current operation type)			Electronic	Electronic	Electronic	Electronic
Overcurrent trip mechanism			Thermal-magnetic	Thermal-magnetic	Thermal-magnetic	Thermal-magnetic
Earth leakage indication			Mechanical button	Mechanical button	Mechanical button	Mechanical button
Colour of cover			Grey Blue	Grey Blue	Grey Blue	Grey Blue
Trip button (Colour)			Yes (Red)	Yes (Red)	Yes (Red)	Yes (Red)
Suitability for isolation			Yes	Yes	Yes	Yes
Reverse connection			Yes	Yes	Yes	Yes

Notes:

◉ : Standard. This configuration used unless otherwise specified.
○ : Optional standard. Specify when ordering. ● : "yes" or "available". — : "no" or "not available".
⑭ : When applying 3-pole type to a 1ø2W circuit, use both ends and do not use the central pole.
⑮ : When applying 3-pole type to a 1ø3W circuit, apply voltage to both ends and connect the neutral wire to the central pole.
㊸ : For the extension bars, please place the order separately in parts.

Remark: The rated sensitivity current is set to 100mA and the time delay tripping type's operating time is set to 0.45 seconds before delivery.

Combinations of Internally Mounted Accessories (Optional)

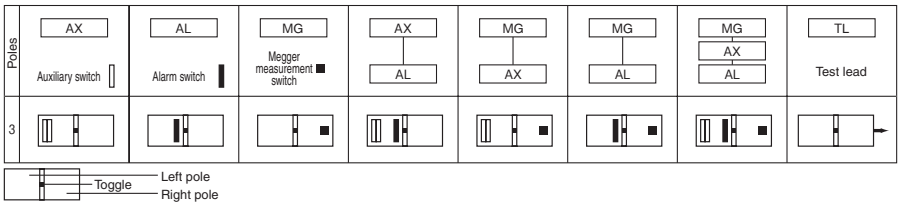

Time/Current characteristic curves

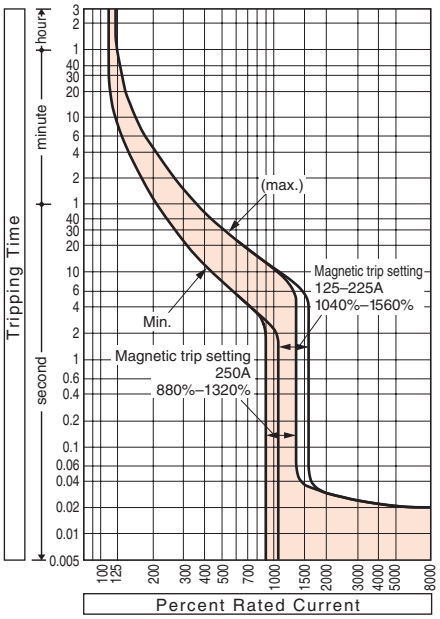

Ambient compensating curves

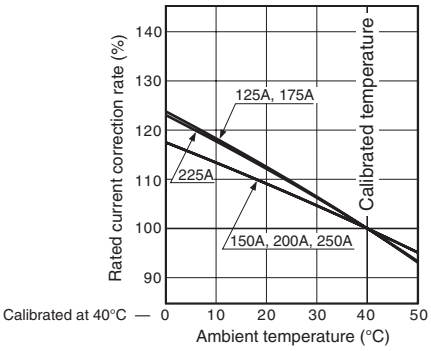

Earth leakage trip characteristic

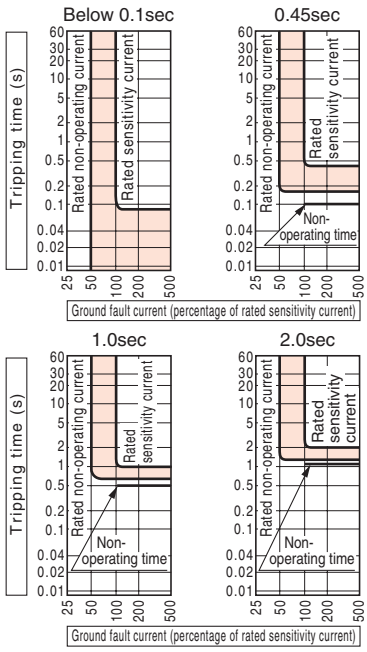

Time delay tripping type will operate on 0.15-0.45sec for 0.45sec, 0.6-1.0sec for 1.0sec, 1.25-2.0sec for 2.0sec.

Outline dimensions (mm) — ZE250-SF, ZS250-SF

Front-connected

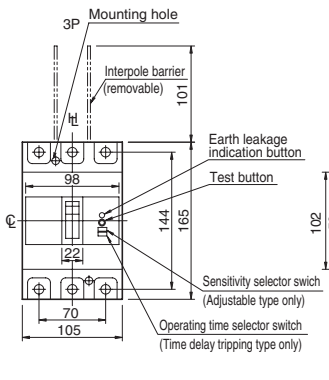

Preparation of conductor

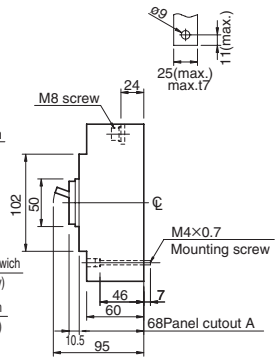

With extension bars (optional)*

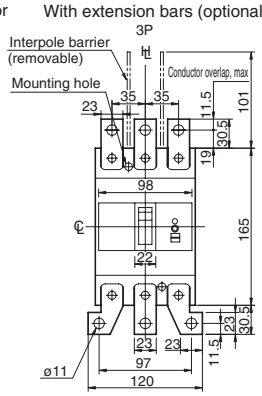

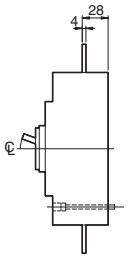

Drilling plan (front view)

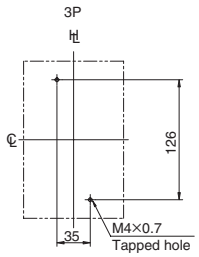

*For the extension bars,
straight bars or spread bars can be supplied.

Rear-connected

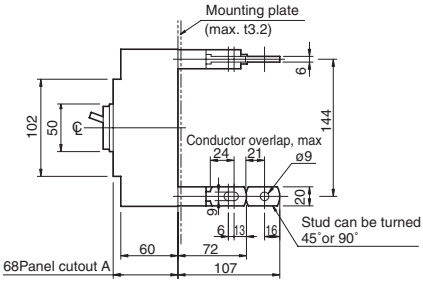

(Bottom view)

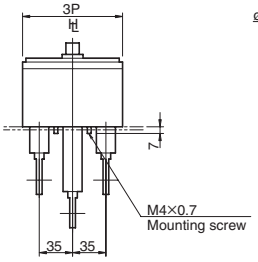

Drilling plan (front view)

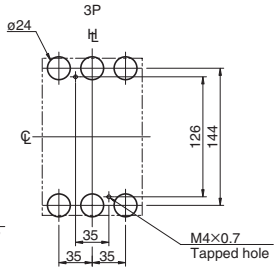

Panel cutout A (front view)

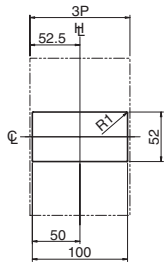

Panel cutout dimensions shown give an allowance of 1.0mm around the handle escutcheon.

Note: Studs are factory installed in horizontal direction both on the line and load sides.

Flush-mounted

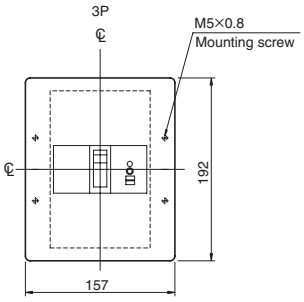

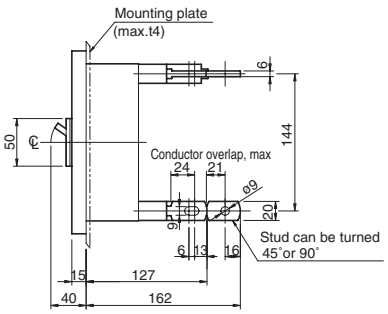

Drilling plan (front view)

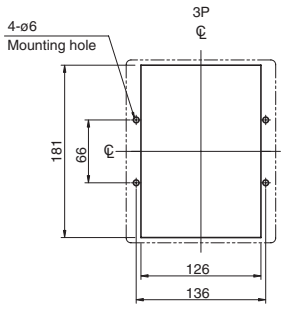

Control circuit

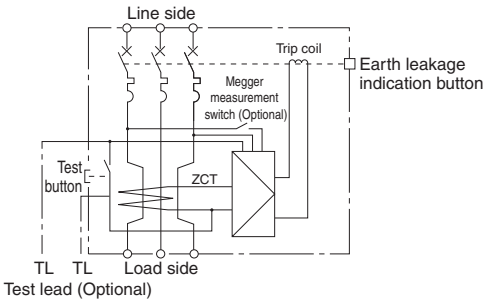

7 Characteristics and Outline Dimensions TemBreak PRO

Earth Leakage Circuit Breakers

ZS225-GF

Ratings and Specifications

Frame size (A)			225	
Type			ZS225-GF	
Number of poles			3	4
Phase and wires	1ø2W	⑭	●	—
	3ø3W, 1ø3W	⑮	●	—
	3ø4W		—	●
■ Ratings				
Rated impulse withstand voltage〔U_{imp}〕 kV			8	
Rated current, A Calibrated at 40°C			125 200 150 225 175	
Rated operational voltage AC V	Instantaneous tripping type		100-440 common	
	Operable voltage fluctuation range V		80–484	
	Time delay tripping type		100-440 common	
	Operable voltage fluctuation range V		80–484	
Rated sensitivity current mA	Instantaneous tripping type		30	
			100/200/500 selectable	
		Max. operating time sec	0.1	
	Time delay tripping type		100/200/500 selectable	
		Max. operating time sec	0.45/1.0/2.0 selectable	
		Non-operating time sec	0.1/0.5/1.2 or more	
■ Rated breaking capacity, kA				
JIS C 8201-2-2 Ann.2 I_{cu}(sym)	AC	440V	50	
		415V	65	
		240V	85	
		100V	85	
Weight (◉ marked standard type) kg			1.7	2.1
■ Connections and Mountings				
Front-connected (FC)	Terminal screws		◉	
	With extension bars		○ ⑤③	
Rear-connected (RC)	Flat bar studs		○	
Plug-in (PM) For switchboards	High-performance (PMB)		—	
	Standard (PMC)		—	
For distribution boards (PMD)			—	
Flush-mounted (FP)	With flat bar studs		○	
Draw-out type (DR)			—	
TemPlug70 (PG)			○	—
DIN rail mount			—	
■ Accessories (optional)		Symbol		
Externally mounted: Motor operator		M C	●	
External operating handle	Breaker-mounted	H B	●	
	Door-mounted (variable depth)	H P	●	
Toggle extension		H A	—	
Mechanical interlock	Slide type	M S	●	
	Link type	M L	—	
	Wire type	M W	—	
Toggle holder		H H	●	
Toggle lock		H L	●	
Terminal cover	For front-connected	C F	●	
	For rear-connected and plug-in	C R	●	
Terminal block for lead		T F	●	
Door flange		D F	—	
CE marking			Non	
Earth leakage trip mechanism (Current operation type)			Electronic	
Overcurrent trip mechanism			Thermal-magnetic	
Earth leakage indication			Mechanical button	
Colour of cover			Grey Blue	
Trip button (Colour)			Yes (Red)	
Suitability for isolation			Yes	
Reverse connection			Yes ⑫	

Notes:

◉ : Standard. This configuration used unless otherwise specified.
○ : Optional standard. Specify when ordering. ● : "yes" or "available". — : "no" or "not available".
⑭ : When applying 3-pole type to a 1ø2W circuit, use both ends and do not use the central pole.
⑮ : When applying 3-pole type to a 1ø3W circuit, apply voltage to both ends and connect the neutral wire to the central pole.
⑤③ : For the extension bars, please place the order separately in parts.
⑫ : There are some limitations. See page 5-23 for details.

Remark: The rated sensitivity current is set to 100mA and the time delay tripping type's operating time is set to 0.45 seconds before delivery.

Combinations of Internally Mounted Accessories (Optional)

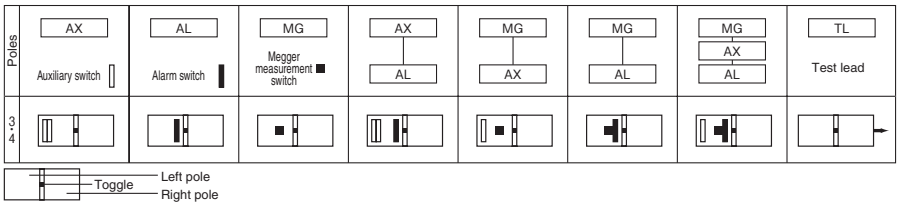

Time/Current characteristic curves

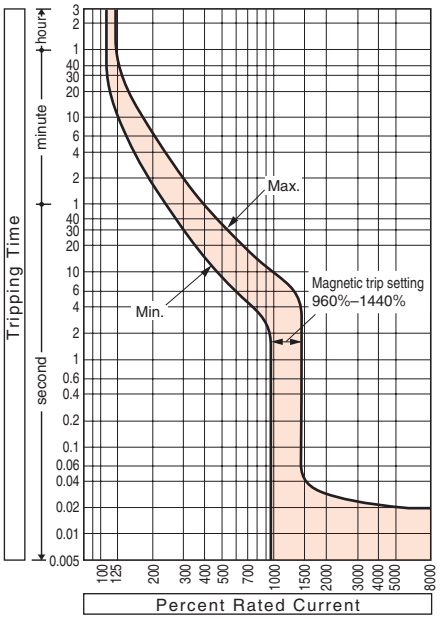

Ambient compensating curves

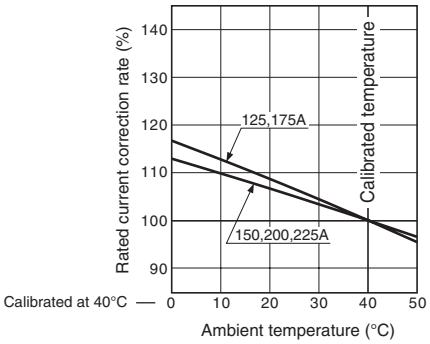

Earth leakage trip characteristic

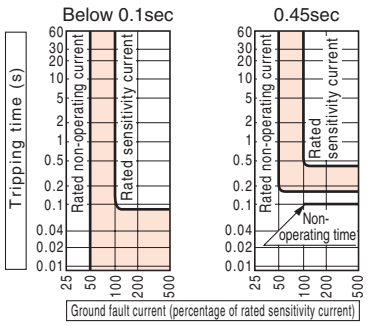

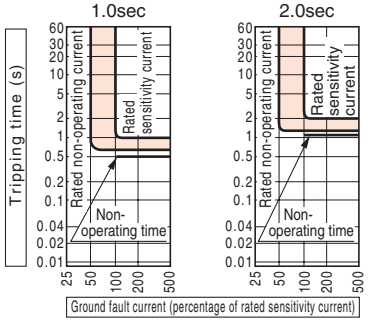

Time delay tripping type will operate on 0.15-0.45sec for 0.45sec, 0.6-1.0sec for 1.0sec, 1.25-2.0sec for 2.0sec.

Outline dimensions (mm) ZS225-GF

Front-connected

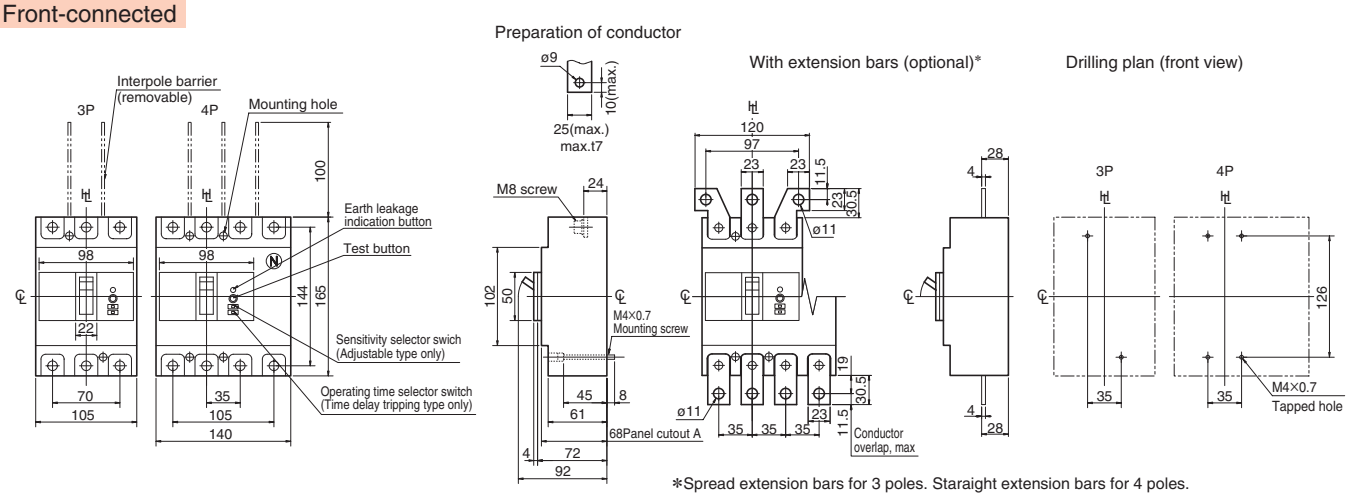

*Spread extension bars for 3 poles. Staraight extension bars for 4 poles.

Rear-connected

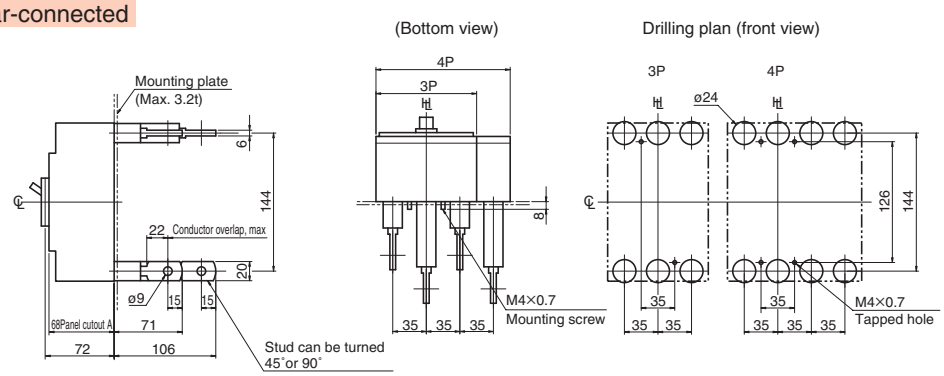

Note: Studs are factory installed in horizontal direction both on the line and load sides.

Panel cutout A (front view)

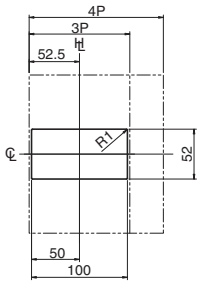

Panel cutout dimensions shown give an allowance of 1.0mm around the handle escutcheon.

Flush-mounted

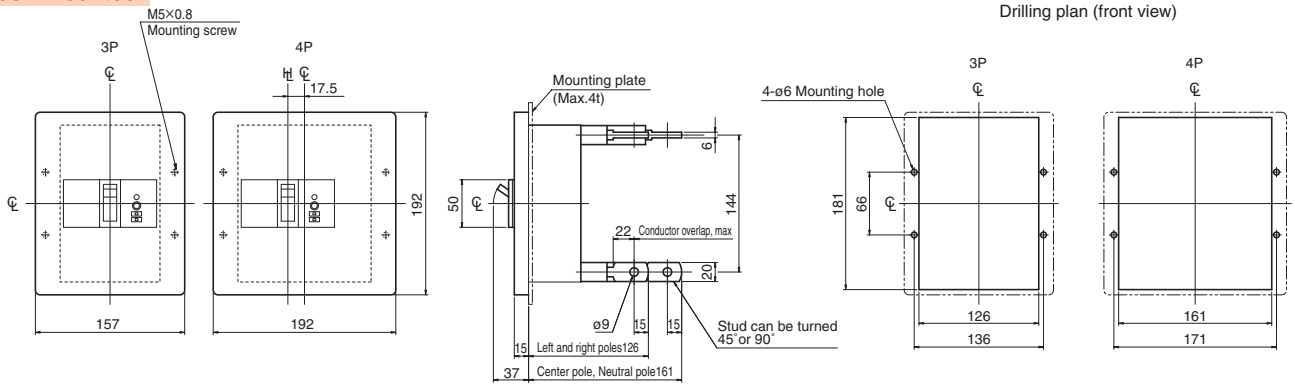

Note: Studs are factory installed in horizontal direction both on the line and load sides.

Control circuit

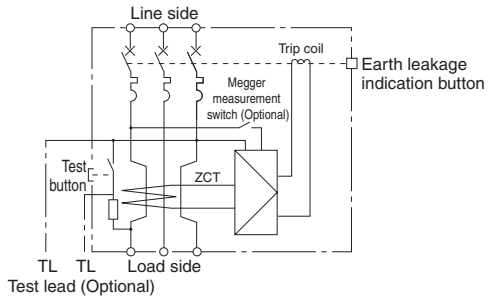

7 Characteristics and Outline Dimensions TemBreak PRO

Earth Leakage Circuit Breakers

ZS250-GF

Ratings and Specifications

Frame size (A)			250	
Type			ZS250-GF	
Number of poles			3	4
Phase and wires	1ø2W	⑭	●	—
	3ø3W, 1ø3W	⑮	●	—
	3ø4W		—	●
■ Ratings				
Rated impulse withstand voltage〔U_{imp}〕 kV			8	
Rated current, A Calibrated at 40°C			250	
Rated operational voltage AC V	Instantaneous tripping type		100-440 common	
	Operable voltage fluctuation range V		80–484	
	Time delay tripping type		100-440 common	
	Operable voltage fluctuation range V		80–484	
Rated sensitivity current mA	Instantaneous tripping type		30	
			100/200/500 selectable	
	Max. operating time sec		0.1	
	Time delay tripping type		100/200/500 selectable	
	Max. operating time sec		0.45/1.0/2.0 selectable	
	Non-operating time sec		0.1/0.5/1.2 or more	
■ Rated breaking capacity, kA				
JIS C 8201-2-2 Ann.2 I_{cu}(sym)	AC	440V	50	
		415V	65	
		240V	85	
		100V	85	
Weight (◉ marked standard type) kg			1.7	2.1
■ Connections and Mountings				
Front-connected (FC)	Terminal screws		◉	
	With extension bars		○ ⑤③	
Rear-connected (RC)	Flat bar studs		○	
Plug-in (PM)	For switchboards	High-performance (PMB)	—	
		Standard (PMC)	—	
	For distribution boards (PMD)		—	
Flush-mounted (FP)	With flat bar studs		○	
Draw-out type (DR)			—	
TemPlug70 (PG)			○	—
DIN rail mount			—	
■ Accessories (optional)		Symbol		
Externally mounted: Motor operator		M C	●	
External operating handle	Breaker-mounted	H B	●	
	Door-mounted (variable depth)	H P	●	
Toggle extension		H A	—	
Mechanical interlock	Slide type	M S	●	
	Link type	M L	—	
	Wire type	M W	—	
Toggle holder		H H	●	
Toggle lock		H L	●	
Terminal cover	For front-connected	C F	●	
	For rear-connected and plug-in	C R	●	
Terminal block for lead		T F	●	
Door flange		D F	—	
CE marking			Non	
Earth leakage trip mechanism (Current operation type)			Electronic	
Overcurrent trip mechanism			Thermal-magnetic	
Earth leakage indication			Mechanical button	
Colour of cover			Grey Blue	
Trip button (Colour)			Yes (Red)	
Suitability for isolation			Yes	
Reverse connection			Yes ⑫	

Notes:

◉ : Standard. This configuration used unless otherwise specified.
○ : Optional standard. Specify when ordering. ● : "yes" or "available". — : "no" or "not available".
⑭ : When applying 3-pole type to a 1ø2W circuit, use both ends and do not use the central pole.
⑮ : When applying 3-pole type to a 1ø3W circuit, apply voltage to both ends and connect the neutral wire to the central pole.
⑤③ : For the extension bars, please place the order separately in parts.
⑫ : There are some limitations. See page 5-23 for details.

Remark: The rated sensitivity current is set to 100mA and the time delay tripping type's operating time is set to 0.45 seconds before delivery.

Combinations of Internally Mounted Accessories (Optional)

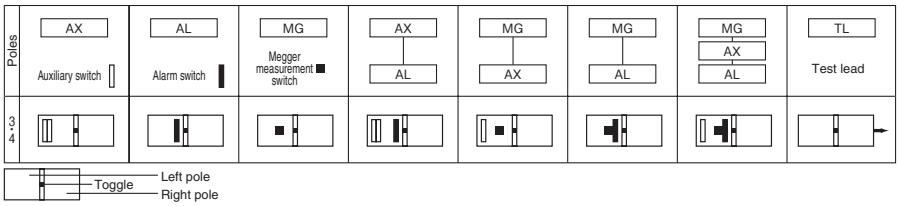

Time/Current characteristic curves

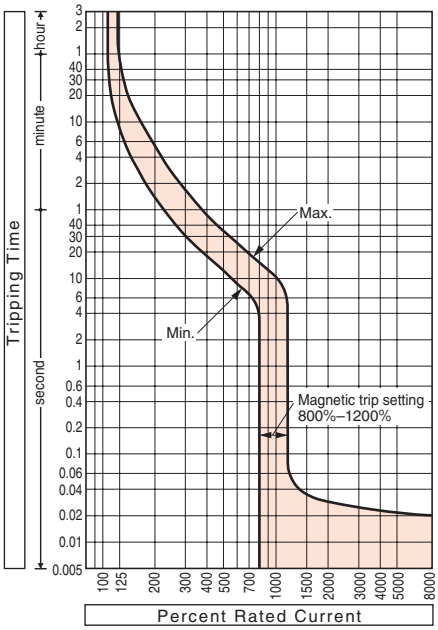

Ambient compensating curves

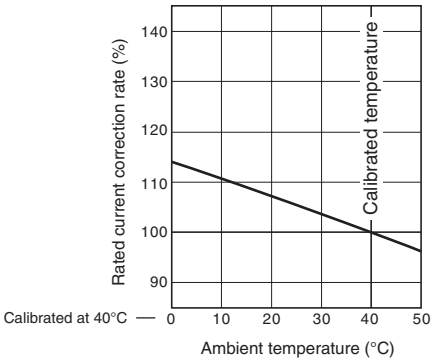

Earth leakage trip characteristic

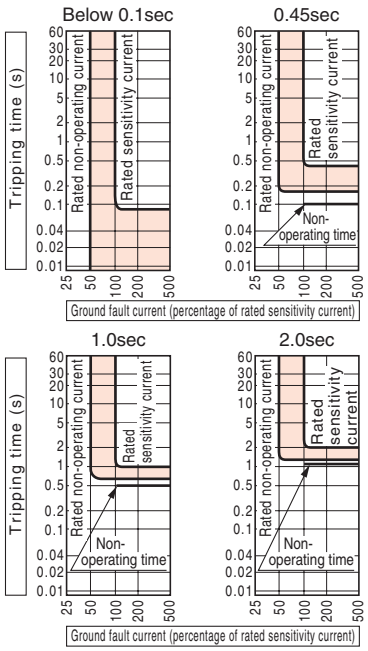

Time delay tripping type will operate on 0.15-0.45sec for 0.45sec, 0.6-1.0sec for 1.0sec, 1.25-2.0sec for 2.0sec.

Outline dimensions (mm) ZS250-GF

Front-connected

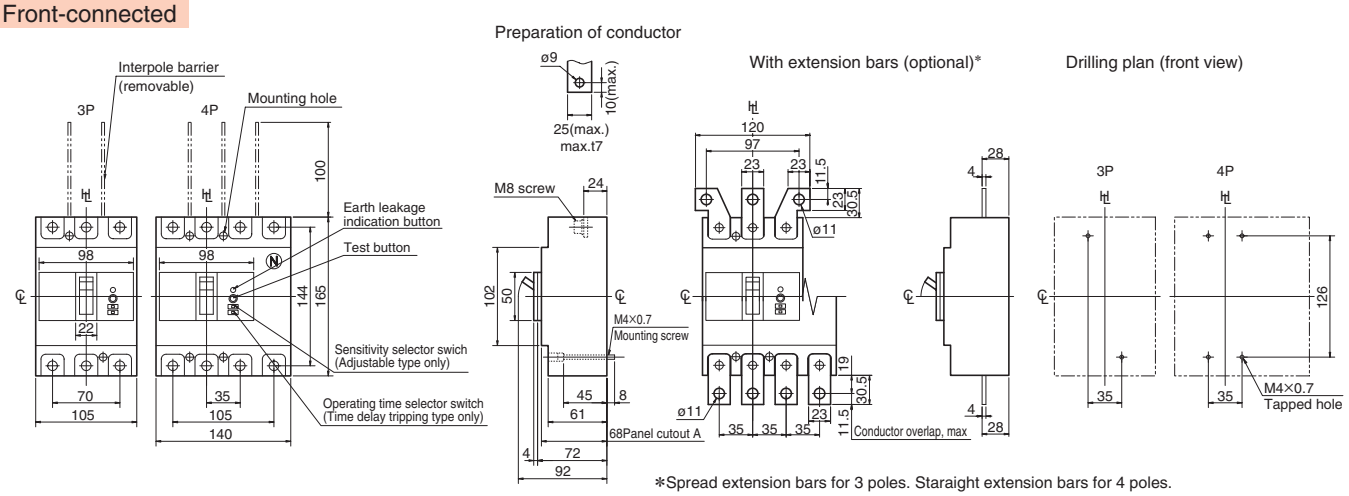

*Spread extension bars for 3 poles. Staraight extension bars for 4 poles.

Rear-connected

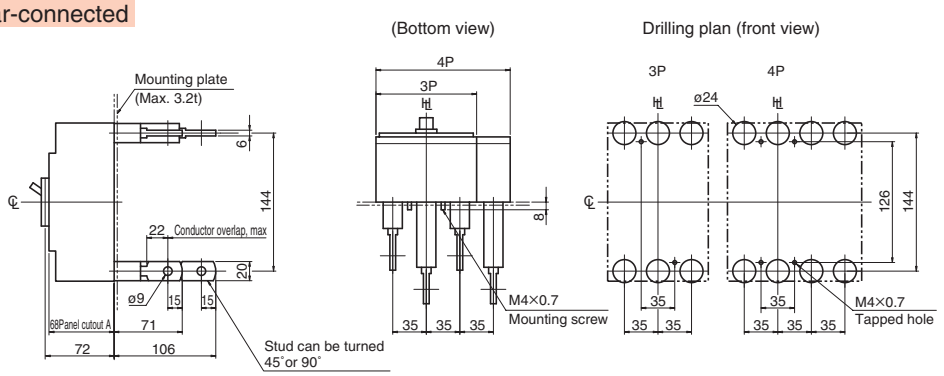

Note: Studs are factory installed in horizontal direction both on the line and load sides.

Panel cutout A (front view)

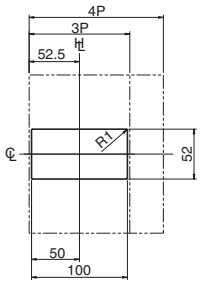

Panel cutout dimensions shown give an allowance of 1.0mm around the handle escutcheon.

Flush-mounted

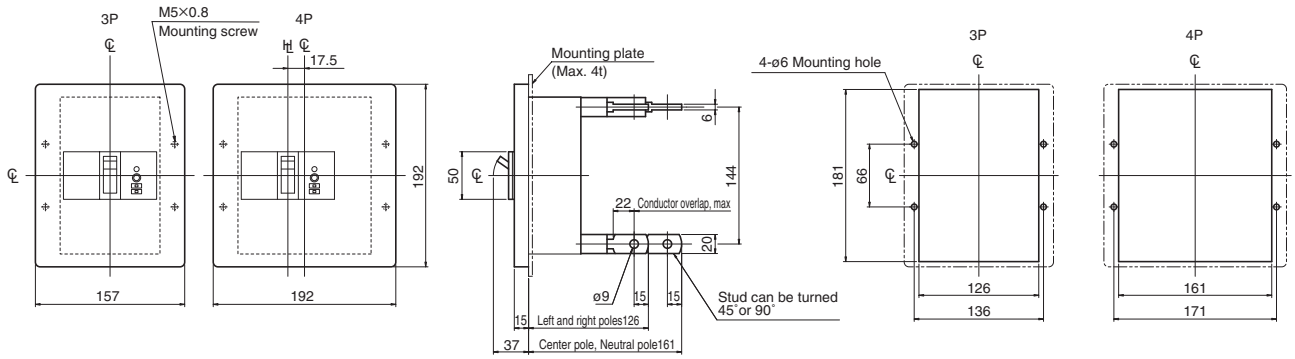

Note: Studs are factory installed in horizontal direction both on the line and load sides.

Control circuit

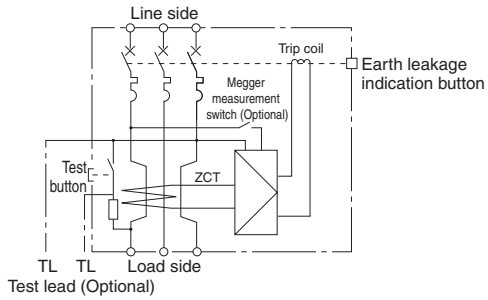

7 Characteristics and Outline Dimensions TemBreak PRO

Earth Leakage Circuit Breakers

ZE400-NF, ZS400-NF, ZS400-GF

Ratings and Specifications

Frame size (A)			400	400		400	
Type			ZE400-NF	ZS400-NF		ZS400-GF	
Number of poles			3	3	4	3	4
Phase and wires	1ø2W	⑭	●	●	—	●	—
	3ø3W, 1ø3W	⑮	●	●	—	●	—
	3ø4W		—	—	●	—	●
■ Ratings							
Rated impulse withstand voltage〔U_{imp}〕 kV			8	8		8	
Rated current, A			250 350	250 350		250 350	
Calibrated at 40°C			300 400	300 400		300 400	
Rated operational voltage AC V	Instantaneous tripping type		100-440 common	100-440 common		100-440 common	
	Operable voltage fluctuation range V		80–484	80–484		80–484	
	Time delay tripping type		100-440 common	100-440 common		100-440 common	
	Operable voltage fluctuation range V		80–484	80–484		80–484	
Rated sensitivity current mA	Instantaneous tripping type		30	30		30	
			100/200/500 selectable	100/200/500 selectable		100/200/500 selectable	
			—	—		—	
	Max. operating time sec		0.1	0.1		0.1	
	Time delay tripping type		100/200/500 selectable	100/200/500 selectable		100/200/500 selectable	
	Max. operating time sec		0.45/1.0/2.0 selectable	0.45/1.0/2.0 selectable		0.45/1.0/2.0 selectable	
	Non-operating time sec		0.1/0.5/1.2 or more	0.1/0.5/1.2 or more		0.1/0.5/1.2 or more	
■ Rated breaking capacity, kA							
JIS C 8201-2-2 Ann.2 I_{cu}(sym)	AC	440V	22	45		65	
		415V	25	50		70	
		240V	35	85		100	
		100V	35	85		100	
Weight (◉ marked standard type) kg			5.2	5.2	6.6	5.2	6.6
■ Connections and Mountings							
Front-connected (FC)	Terminal screws		◉	◉		◉	
	With extension bars		○	○		○	
Rear-connected (RC)	Flat bar studs		○	○		○	
Plug-in (PM) For switchboards	High-performance (PMB)		—	—		—	
	Standard (PMC)		—	—		—	
For distribution boards (PMD)			—	—		—	
Flush-mounted (FP)	With flat bar studs		○	○		○	
Draw-out type (DR)			—	—		—	
TemPlug70 (PG)			○	○	—	○	—
DIN rail mount			—	—		—	
■ Accessories (optional)		Symbol					
Externally mounted: Motor operator		M C	●	●		●	
External operating handle	Breaker-mounted	H B	●	●		●	
	Door-mounted (variable depth)	H P	●	●		●	
Toggle extension		H A	●	●		●	
Mechanical interlock	Slide type	M S	●	●		●	
	Link type	M L	—	—		—	
	Wire type	MW	—	—		—	
Toggle holder		H H					
Toggle lock		H L	●	●		●	
Terminal cover	For front-connected	C F	●	●		●	
	For rear-connected and plug-in	C R	●	●		●	
Terminal block for lead		T F	●	●		●	
Door flange		D F	—	—		—	
CE marking			Non	Non		Non	
Earth leakage trip mechanism (Current operation type)			Electronic	Electronic		Electronic	
Overcurrent trip mechanism			Thermal-magnetic	Thermal-magnetic (adjustable)		Thermal-magnetic (adjustable)	
Earth leakage indication			Mechanical button	Mechanical button		Mechanical button	
Colour of cover			Grey Blue	Grey Blue		Grey Blue	
Trip button (Colour)			Yes (Red)	Yes (Red)		Yes (Red)	
Suitability for isolation			Yes	Yes		Yes	
Reverse connection			Yes ⑫	Yes ⑫		Yes ⑫	

Notes:

◉ : Standard. This configuration used unless otherwise specified.

○ : Optional standard. Specify when ordering. ● : "yes" or "available". — : "no" or "not available".

⑭ : When applying 3-pole type to a 1ø2W circuit, use both ends and do not use the central pole.

⑮ : When applying 3-pole type to a 1ø3W circuit, apply voltage to both ends and connect the neutral wire to the central pole.

⑫ : There are some limitations. See page 5-23 for details.

Remark: The rated sensitivity current is set to 100mA and the time delay tripping type's operating time is set to 0.45 seconds before delivery.

Combinations of Internally Mounted Accessories (Optional)

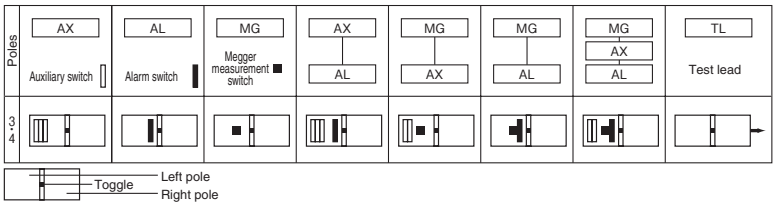

Time/Current characteristic curves ZS400-NF, ZS400-GF

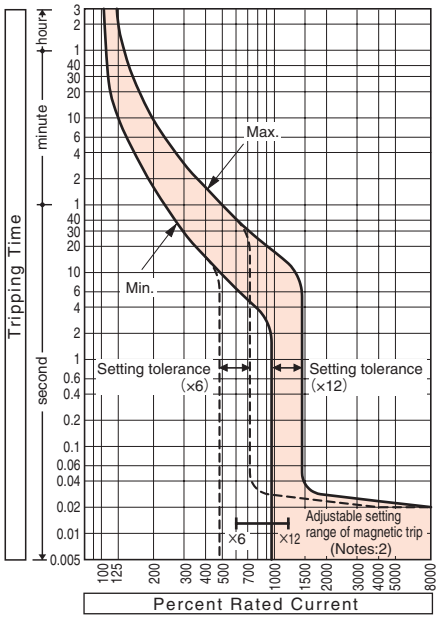

Ambient compensating curves

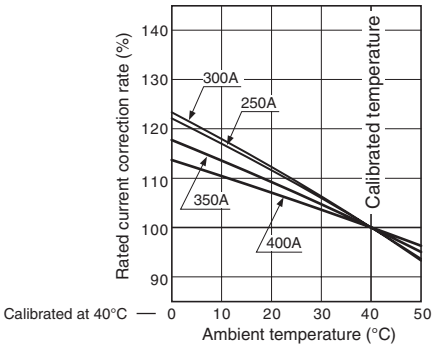

Magnetic trip pick-up current

Rated current (A)	I_n× 12	11	10	9	8	7	6
	Magnetic trip pick-up current (adjustable range) (A)						
250	3000	2750	2500	2250	2000	1750	1500
300	3600	3300	3000	2700	2400	2100	1800
350	4200	3850	3500	3150	2800	2450	2100
400	4800	4400	4000	3600	3200	2800	2400

Notes:

(1) : Setting tolerance: ±20%.

(2) : ZE400-NF type is a single point fixed setting of 10 times the rated current. Setting tolerance: ±10%.

(3) : The Time/Current characteristic curve is for adjustable instantaneous trip.

Remark (1) : If the model is adjustable and unless otherwise stated when ordering, the scale is factory set to ×12.

Earth leakage trip characteristic

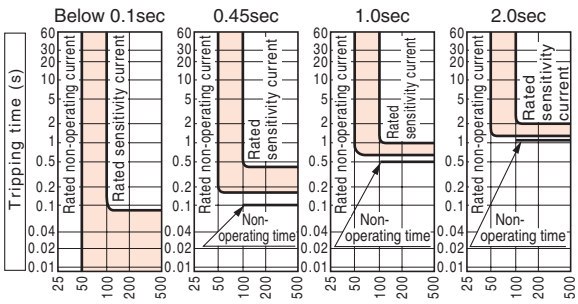

Time delay tripping type will operate on 0.15-0.45sec for 0.45sec, 0.6-1.0sec for 1.0sec, 1.25-2.0sec for 2.0sec.

Outline dimensions (mm) — ZE400-NF, ZS400-NF, ZS400-GF

Front-connected

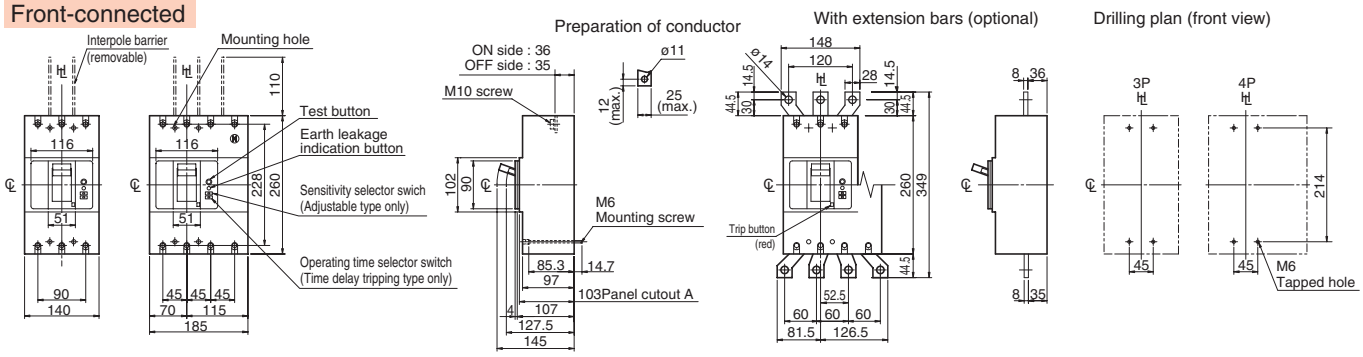

Rear-connected

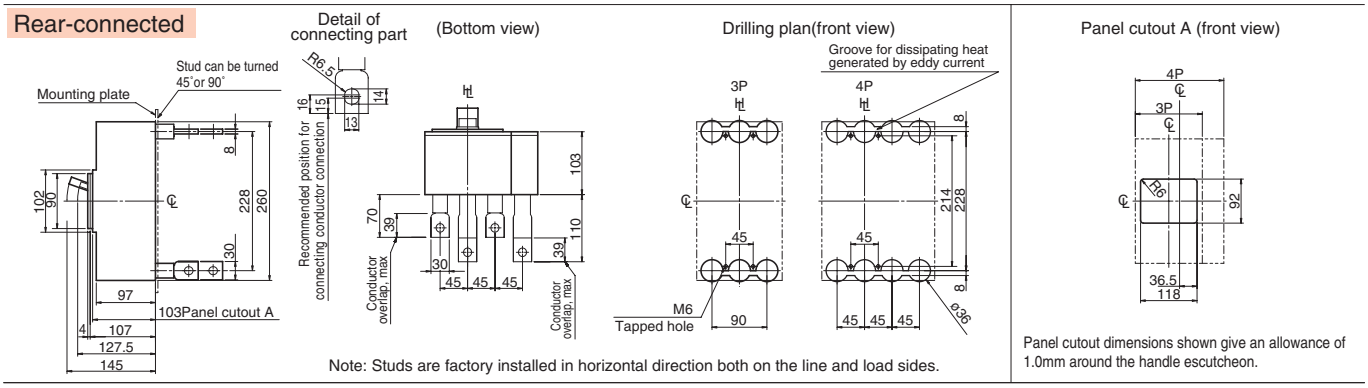

Note: Studs are factory installed in horizontal direction both on the line and load sides.

Panel cutout dimensions shown give an allowance of 1.0mm around the handle escutcheon.

Flush-mounted

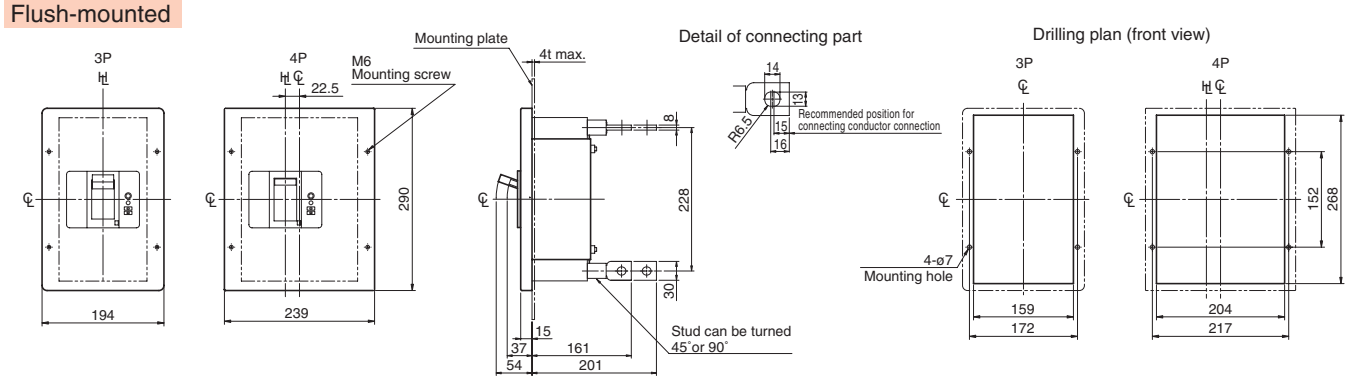

Note: Studs are factory installed in horizontal direction both on the line and load sides.

Control circuit

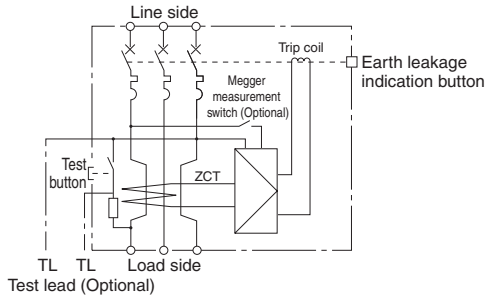

Time/Current characteristic curves ZE400-NF

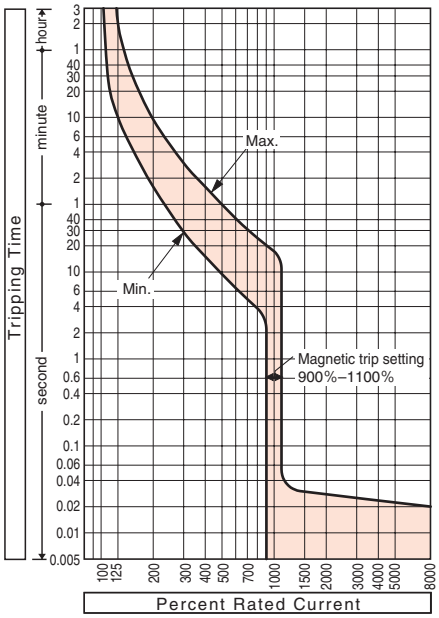

7 Characteristics and Outline Dimensions TemBreak PRO

Earth Leakage Circuit Breakers

ZS630-CF, ZS630-NF

Ratings and Specifications

Frame size (A)		600 / 630	600 / 630	
Type		ZS630-CF	ZS630-NF	
Number of poles		3	3	
Phase and wires	1ø2W ⑭	●	●	
	3ø3W, 1ø3W ⑮	●	●	
	3ø4W	—	—	
■ Ratings				
Rated impulse withstand voltage〔U_{imp}〕 kV		8	8	
Rated current, A		500 / 630	500 / 630	
Calibrated at 40°C		600	600	
Rated operational voltage AC V	Instantaneous tripping type	100-440 common	100-440 common	
	Operable voltage fluctuation range V	80–484	80–484	
	Time delay tripping type	100-440 common	100-440 common	
	Operable voltage fluctuation range V	80–484	80–484	
Rated sensitivity current mA	Instantaneous tripping type	30	30	
		100/200/500 selectable	100/200/500 selectable	
		—	—	
	Max. operating time sec	0.1	0.1	
	Time delay tripping type	100/200/500 selectable	100/200/500 selectable	
	Max. operating time sec	0.45/1.0/2.0 selectable	0.45/1.0/2.0 selectable	
	Non-operating time sec	0.1/0.5/1.2 or more	0.1/0.5/1.2 or more	
■ Rated breaking capacity, kA				
JIS C 8201-2-2 Ann.2 AC	440V	30	45	
I_{cu}(sym)	415V	36	50	
	240V	50	85	
	100V	50	85	
Weight (◉ marked standard type) kg		10.0	10.0	
■ Connections and Mountings				
Front-connected (FC)	Terminal screws	—	—	
	With extension bars	◉	◉	
Rear-connected (RC)	Flat bar studs	○	○	
Plug-in (PM) For switchboards	High-performance (PMB)	—	—	
	Standard (PMC)	—	—	
For distribution boards (PMD)		—	—	
Flush-mounted (FP)	With flat bar studs	○	○	
Draw-out type (DR)		—	—	
TemPlug70 (PG)		○	○	
DIN rail mount		—	—	
■ Accessories (optional)	Symbol			
Externally mounted: Motor operator	M C	●	●	
External operating handle: Breaker-mounted	H B	●	●	
External operating handle: Door-mounted (variable depth)	H P	●	●	
Toggle extension	H A	●	●	
Mechanical interlock: Slide type	M S	●	●	
Mechanical interlock: Link type	M L	—	—	
Mechanical interlock: Wire type	MW	—	—	
Toggle holder	H H	●	●	
Toggle lock	H L	●	●	
Terminal cover: For front-connected	C F	●	●	
Terminal cover: For rear-connected and plug-in	C R	●	●	
Terminal block for lead	T F	●	●	
Door flange	D F	—	—	
CE marking		Non	Non	
Earth leakage trip mechanism (Current operation type)		Electronic	Electronic	
Overcurrent trip mechanism		Thermal-magnetic (adjustable)	Thermal-magnetic (adjustable)	
Earth leakage indication		Mechanical button	Mechanical button	
Colour of cover		Grey Blue	Grey Blue	
Trip button (Colour)		Yes (Red)	Yes (Red)	
Suitability for isolation		Yes	Yes	
Reverse connection		Yes ⑫	Yes ⑫	

Notes:

◉ : Standard. This configuration used unless otherwise specified.
○ : Optional standard. Specify when ordering. ● : "yes" or "available". — : "no" or "not available".
⑭ : When applying 3-pole type to a 1ø2W circuit, use both ends and do not use the central pole.
⑮ : When applying 3-pole type to a 1ø3W circuit, apply voltage to both ends and connect the neutral wire to the central pole.
⑫ : There are some limitations. See page 5-23 for details.

Remark: The rated sensitivity current is set to 100mA and the time delay tripping type's operating time is set to 0.45 seconds before delivery.

Combinations of Internally Mounted Accessories (Optional)

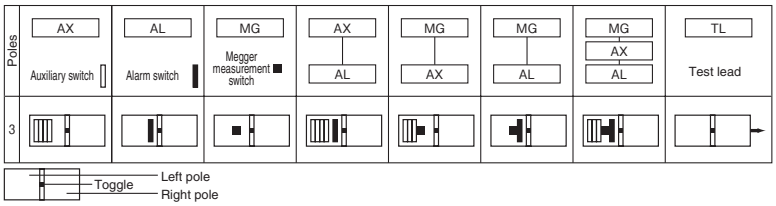

Time/Current characteristic curves

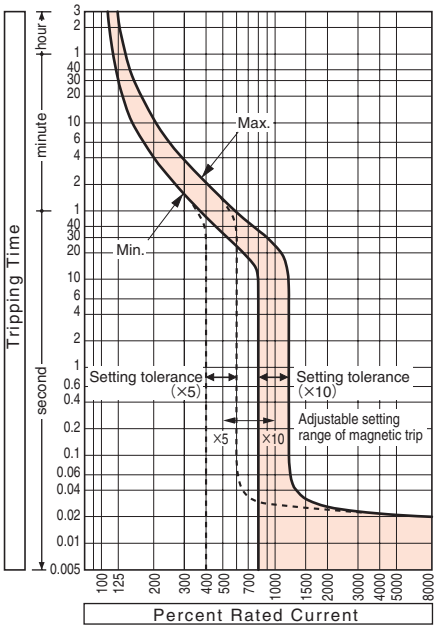

Ambient compensating curves

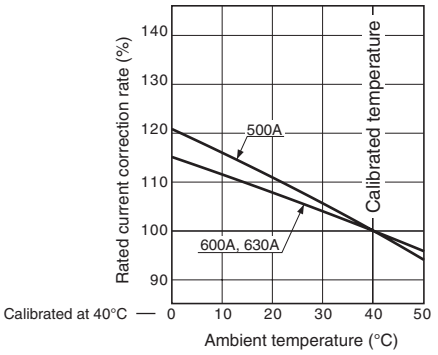

Magnetic trip pick-up current

Rated current (A)	Magnetic trip pick-up current (adjustable range) (A) I_n× 10	9	8	7	6	5
500	5000	4500	4000	3500	3000	2500
600	6000	5400	4800	4200	3600	3000
630	6300	5670	5040	4410	3780	3150

Note (1) : Setting tolerance: ±20%.

Remark (1) : Unless otherwise stated when ordering, the selector dial is factory set to position "10".

Earth leakage trip characteristic

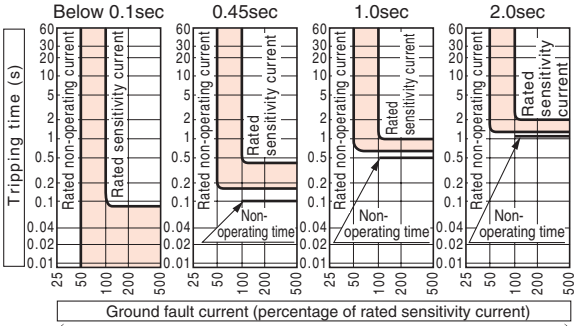

Time delay tripping type will operate on 0.15-0.45sec for 0.45sec, 0.6-1.0sec for 1.0sec, 1.25-2.0sec for 2.0sec.

Outline dimensions (mm) ZS630-CF, ZS630-NF

Front-connected

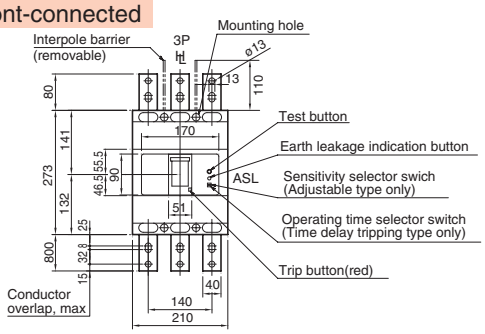

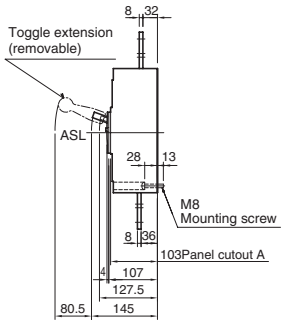

Drilling plan (front view)

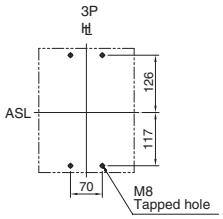

Rear-connected

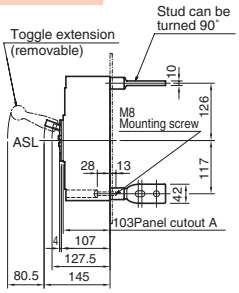

(Bottom view)

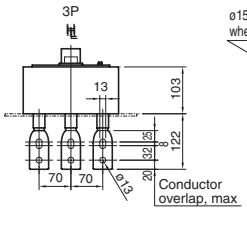

Drilling plan (front view)

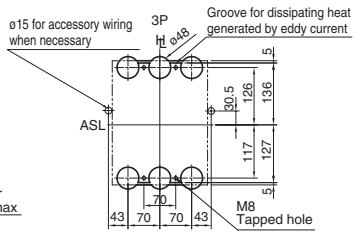

Note: Studs are factory installed in horizontal direction both on the line and load sides.

Panel cutout A (front view)

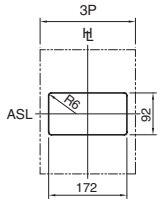

Panel cutout dimensions shown give an allowance of 1.0mm around the handle escutcheon.

Flush-mounted

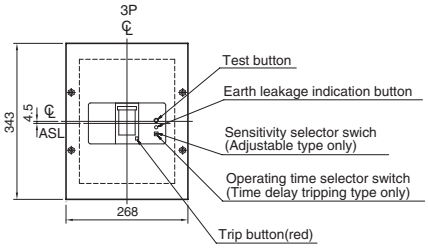

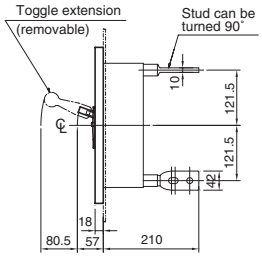

Drilling plan (front view)

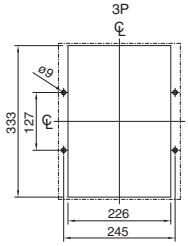

Note: Studs are factory installed in horizontal direction both on the line and load sides.

Control circuit

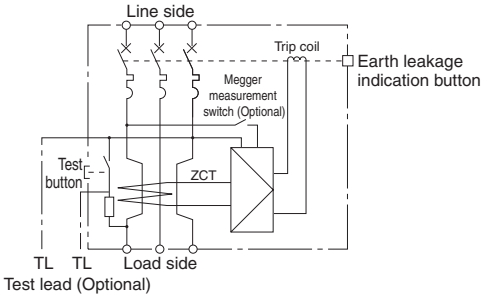

7 Characteristics and Outline Dimensions

TemBreak PRO

Earth Leakage Circuit Breakers

ZS800-CF, ZS800-NF

Ratings and Specifications

Frame size (A)		800	800	
Type		ZS800-CF	ZS800-NF	
Number of poles		3	3	
Phase and wires	1ø2W ⑭	●	●	
	3ø3W, 1ø3W ⑮	●	●	
	3ø4W	—	—	
■ Ratings				
Rated impulse withstand voltage〔U_{imp}〕 kV		8	8	
Rated current, A		700	700	
Calibrated at 40°C		800	800	
Rated operational voltage AC V	Instantaneous tripping type	100-440 common	100-440 common	
	Operable voltage fluctuation range V	80–484	80–484	
	Time delay tripping type	100-440 common	100-440 common	
	Operable voltage fluctuation range V	80–484	80–484	
Rated sensitivity current mA	Instantaneous tripping type	30	30	
		100/200/500 selectable	100/200/500 selectable	
		—	—	
	Max. operating time sec	0.1	0.1	
	Time delay tripping type	100/200/500 selectable	100/200/500 selectable	
	Max. operating time sec	0.45/1.0/2.0 selectable	0.45/1.0/2.0 selectable	
	Non-operating time sec	0.1/0.5/1.2 or more	0.1/0.5/1.2 or more	
■ Rated breaking capacity, kA				
JIS C 8201-2-2 Ann.2 AC	440V	30	45	
I_{cu}(sym)	415V	36	50	
	240V	50	85	
	100V	50	85	
Weight (◉ marked standard type) kg		11.0	11.0	
■ Connections and Mountings				
Front-connected (FC)	Terminal screws	—	—	
	With extension bars	◉	◉	
Rear-connected (RC)	Flat bar studs	○	○	
Plug-in (PM) For switchboards	High-performance (PMB)	—	—	
	Standard (PMC)	—	—	
For distribution boards (PMD)		—	—	
Flush-mounted (FP)	With flat bar studs	○	○	
Draw-out type (DR)		—	—	
TemPlug70 (PG)		—	—	
DIN rail mount		—	—	
■ Accessories (optional)	Symbol			
Externally mounted: Motor operator	M C	●	●	
External operating handle: Breaker-mounted	H B	●	●	
External operating handle: Door-mounted (variable depth)	H P	●	●	
Toggle extension	H A	●	●	
Mechanical interlock: Slide type	M S	●	●	
Mechanical interlock: Link type	M L	—	—	
Mechanical interlock: Wire type	M W	—	—	
Toggle holder	H H	●	●	
Toggle lock	H L	●	●	
Terminal cover: For front-connected	C F	●	●	
Terminal cover: For rear-connected and plug-in	C R	●	●	
Terminal block for lead	T F	●	●	
Door flange	D F	—	—	
CE marking		Non	Non	
Earth leakage trip mechanism (Current operation type)		Electronic	Electronic	
Overcurrent trip mechanism		Thermal-magnetic (adjustable)	Thermal-magnetic (adjustable)	
Earth leakage indication		Mechanical button	Mechanical button	
Colour of cover		Grey Blue	Grey Blue	
Trip button (Colour)		Yes (Red)	Yes (Red)	
Suitability for isolation		Yes	Yes	
Reverse connection		Yes ⑫	Yes ⑫	

Notes:

◉ : Standard. This configuration used unless otherwise specified.
○ : Optional standard. Specify when ordering. ● : "yes" or "available". — : "no" or "not available".
⑭ : When applying 3-pole type to a 1ø2W circuit, use both ends and do not use the central pole.
⑮ : When applying 3-pole type to a 1ø3W circuit, apply voltage to both ends and connect the neutral wire to the central pole.
⑫ : There are some limitations. See page 5-23 for details.

Remark: The rated sensitivity current is set to 100mA and the time delay tripping type's operating time is set to 0.45 seconds before delivery.

Combinations of Internally Mounted Accessories (Optional)

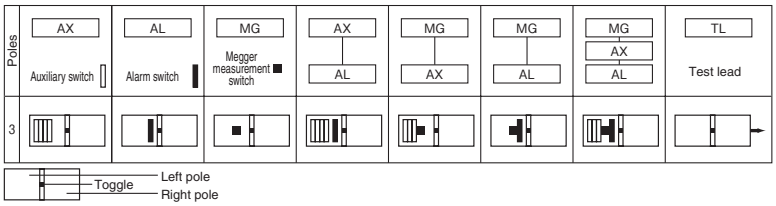

Time/Current characteristic curves

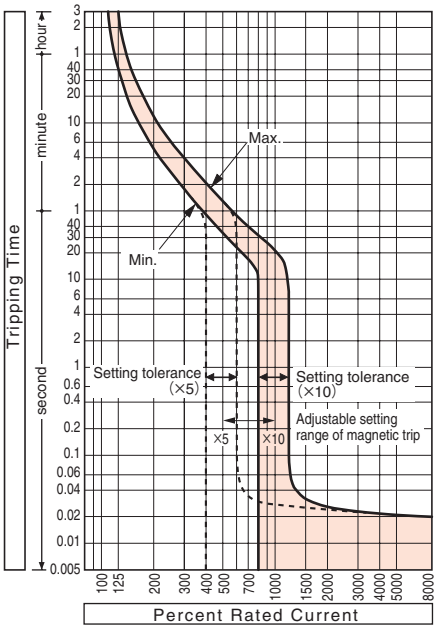

Ambient compensating curves

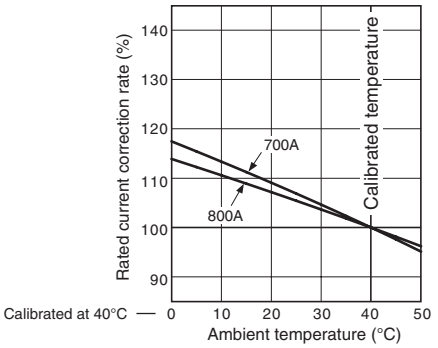

Magnetic trip pick-up current

Rated current (A) I_n×	Magnetic trip pick-up current (adjustable range) (A) 10	9	8	7	6	5
700	7000	6300	5600	4900	4200	3500
800	8000	7200	6400	5600	4800	4000

Note (1) : Setting tolerance: ±20%.

Remark (1) : Unless otherwise stated when ordering, the selector dial is factory set to position "10".

Earth leakage trip characteristic

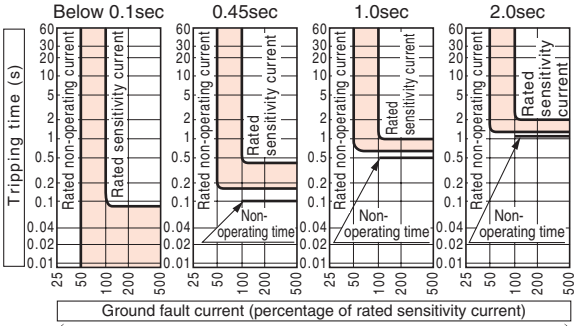

Time delay tripping type will operate on 0.15-0.45sec for 0.45sec, 0.6-1.0sec for 1.0sec, 1.25-2.0sec for 2.0sec.

Outline dimensions (mm) ZS800-CF, ZS800-NF

Front-connected

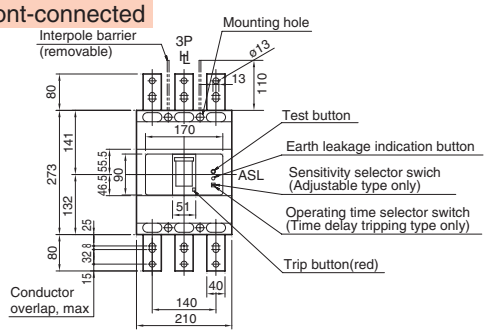

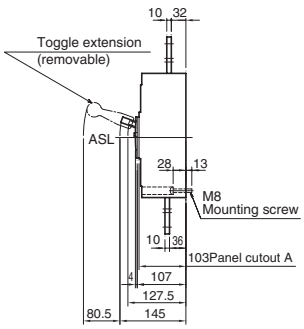

Drilling plan (front view)

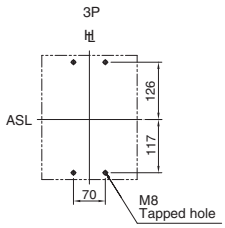

Rear-connected

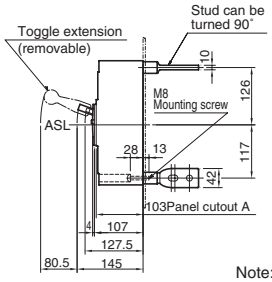

(Bottom view)

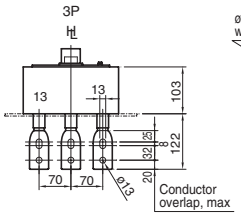

Drilling plan (front view)

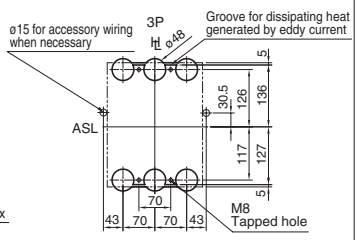

Note: Studs are factory installed in horizontal direction both on the line and load sides.

Panel cutout A (front view)

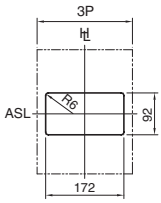

Panel cutout dimensions shown give an allowance of 1.0mm around the handle escutcheon.

Flush-mounted

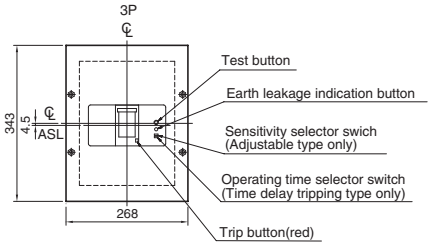

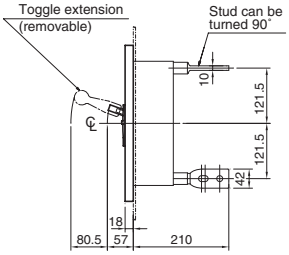

Drilling plan (front view)

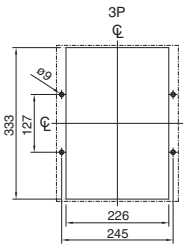

Note: Studs are factory installed in horizontal direction both on the line and load sides.

Control circuit

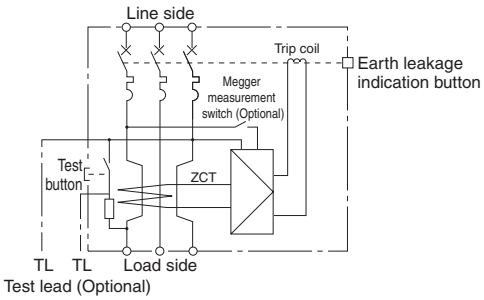

7 Characteristics and Outline Dimensions

TemBreak2

Earth Leakage Circuit Breakers for motor protection

ZE30-NM, ZE50-NM, ZS30-NM, ZS50-CM

Ratings and Specifications

Frame size (A)	30	30	50	50
Type	ZE30-NM	ZS30-NM	ZE50-NM	ZS50-CM
Number of poles	3	3	3	3
■ Ratings				
Rated capacity of motor and rated current of circuit breaker Calibrated at 40°C	(A) / (kW) 200V / (kW) 415V	(A) / (kW) 200V / (kW) 415V	(A) / (kW) 200V / (kW) 415V	(A) / (kW) 200V / (kW) 415V
	1.4 / 0.2 / 0.4	0.7 / — / 0.2	45 / 11 / 22	0.7 / — / 0.2
	2.6 / 0.4 / —	1.4 / 0.2 / 0.4		1.4 / 0.2 / 0.4
	4 / 0.75 / 1.5	2 / — / 0.75		2 / — / 0.75
	5 / 1 / 2.2	2.6 / 0.4 / —		2.6 / 0.4 / —
	8 / 1.5 / 3.7	4 / 0.75 / 1.5		4 / 0.75 / 1.5
	10 / 2.2 / —	5 / 1 / 2.2		5 / 1 / 2.2
	16 / 3.7 / 7.5	8 / 1.5 / 3.7		8 / 1.5 / 3.7
	24 / 5.5 / 11	10 / 2.2 / —		10 / 2.2 / —
	32 / 7.5 / 15	12 / — / 5.5		12 / — / 5.5
		16 / 3.7 / 7.5		16 / 3.7 / 7.5
		24 / 5.5 / 11		24 / 5.5 / 11
		32 / 7.5 / 15		32 / 7.5 / 15
				40 / — / 18.5
				45 / 11 / 22
Remarks: Select according to the full load current of the motor.				
Rated impulse withstand voltage [U_{imp}] kV	6	6	6	6
Rated operational voltage AC V — Instantaneous tripping type	100-440 common	100-440 common	100-440 common	100-440 common
Rated operational voltage AC V — Operable voltage fluctuation range V	80–484	80–484	80–484	80–484
Rated sensitivity current mA — Instantaneous tripping type	30	30	30	30
Rated sensitivity current mA	100	100/200/500 selectable	100/200 selectable	100/200/500 selectable
Rated sensitivity current mA — Max. operating time sec	0.1	0.1	0.1	0.1
■ Rated breaking capacity, kA				
JIS C 8201-2-2 Ann.2 I_{cu}(sym) AC 440V	1.5	2.5	2.5	7.5
415V	1.5	2.5	2.5	7.5
240V	2.5 ⑥⑨	5 ⑥⑨	5 ⑥⑨	10 ⑥⑨
100V	5	5	5	10
Weight (◉ marked standard type) kg	0.5	0.5	0.5	0.5
■ Connections and Mountings				
Front-connected (FC) — Terminal screws	◉ ④⑤	◉ ④⑤	◉ ④⑤	◉ ④⑤
Front-connected (FC) — With extension bars	○ ⑤③	○ ⑤③	○ ⑤③	○ ⑤③
Rear-connected (RC) — Flat bar studs	○	○	○	○
Plug-in (PM) For switchboards — High-performance (PMB)	—	—	—	—
Plug-in (PM) For switchboards — Standard (PMC)	—	—	—	—
Plug-in (PM) For distribution boards (PMD)	—	—	—	—
Flush-mounted (FP) — With flat bar studs	○	○	○	○
Draw-out type (DR)	—	—	—	—
TemPlug70 (PG)	—	—	—	—
DIN rail mount	◉	◉	◉	◉
■ Accessories (optional) — Symbol				
Externally mounted: Motor operator — M C	—	—	—	—
External operating handle — Breaker-mounted — H B	△	△	△	△
External operating handle — Door-mounted (variable depth) — H P	△	△	△	△
Toggle extension — H A	—	—	—	—
Mechanical interlock — Slide type — M S	●	●	●	●
Mechanical interlock — Rear-connected type — M B	—	—	—	—
Mechanical interlock — Link type — M L	—	—	—	—
Mechanical interlock — Wire type — M W	—	—	—	—
Toggle holder — H H	—	—	—	—
Toggle lock — H L	●	●	●	●
Terminal cover — For front-connected — C F	●	●	●	●
Terminal cover — For rear-connected and plug-in — C R	● ②	● ②	● ②	● ②
Terminal block for lead — T F	●	●	●	●
Door flange — D F	—	—	—	—
CE marking	Non	Non	Non	Non
Earth leakage trip mechanism (Current operation type)	Electronic	Electronic	Electronic	Electronic
Overcurrent trip mechanism	Hydraulic-magnetic type	Hydraulic-magnetic type	Hydraulic-magnetic type	Hydraulic-magnetic type
Earth leakage indication	Mechanical button	Mechanical button	Mechanical button	Mechanical button
Colour of cover	Light Grey	Light Grey	Light Grey	Light Grey
Trip button (Colour)	Yes (Red)	Yes (Red)	Yes (Red)	Yes (Red)
Suitability for isolation	Yes	Yes	Yes	Yes
Reverse connection	Non	Non	Non	Non

Notes:

◉ : Standard. This configuration used unless otherwise specified. ○ : Optional standard. Specify when ordering.
● : "yes" or "available". — : "no" or "not available". △ : Custom-built product. Please contact us for details.
② : Supplied as standard. ④⑤ : A wire clamping terminal is provided. ⑤③ : For the extension bars, please place the order separately in parts. ⑥⑨ : This is the value for 230V AC.

Remark: The rated sensitivity current is set to 100mA before delivery.

Time/Current characteristic curves

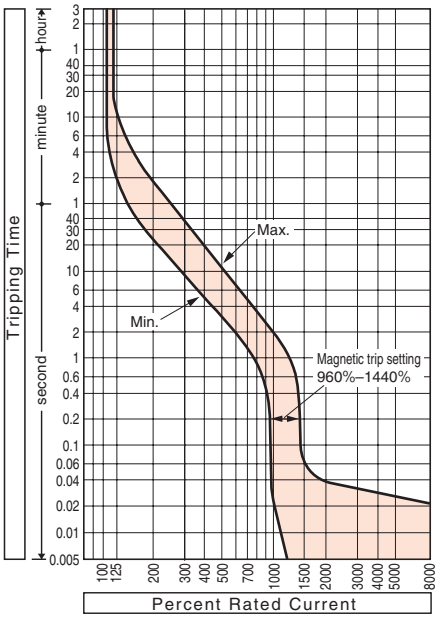

Ambient compensating curves

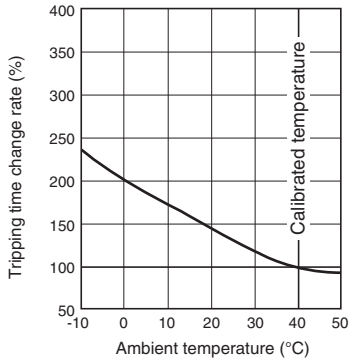

Earth leakage trip characteristic

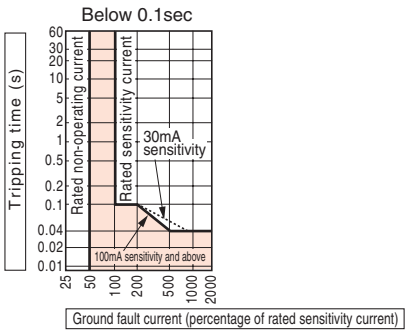

Combinations of Internally Mounted Accessories (Optional)

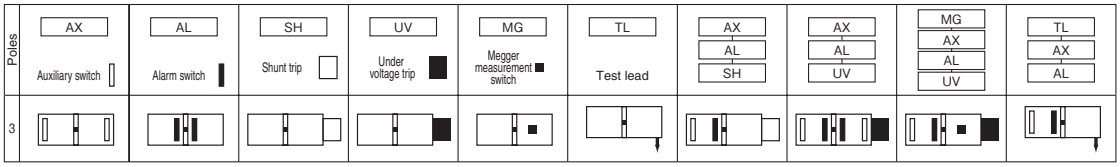

Note: For auxiliary switches or alarm switches, left-hand mounting has priority.
Shunt trip and undervoltage trip are mounted on the side of the circuit breaker.In the case of flush-mounted type (FP), it cannot be installed.

Outline dimensions (mm) — ZE30-NM, ZE50-NM, ZS30-NM, ZS50-CM

Front-connected

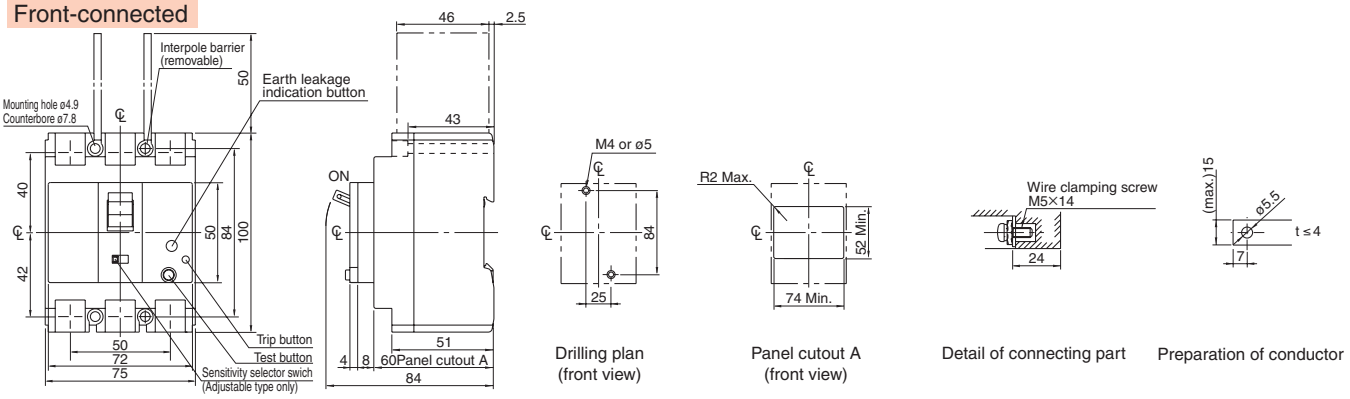

Rear-connected

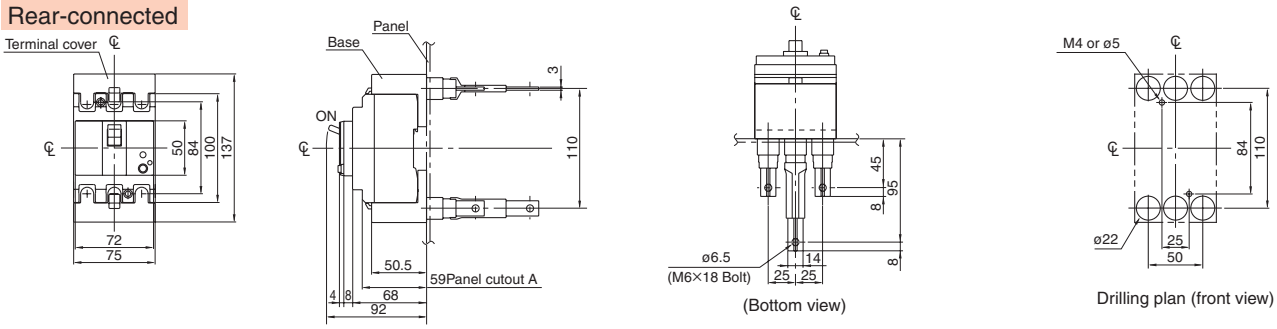

Note: The mounting direction of the studs cannot be changed. Please specify the mounting direction when ordering.
The line side and load side will be factory installed in the horizontal direction unless otherwise specified.

Flush-mounted

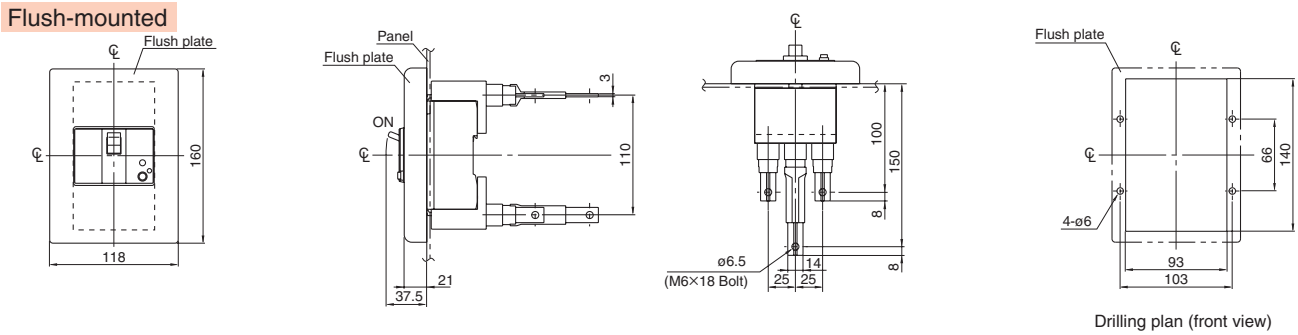

Note: The mounting direction of the studs cannot be changed. Please specify the mounting direction when ordering.
The line side and load side will be factory installed in the horizontal direction unless otherwise specified.

Control circuit

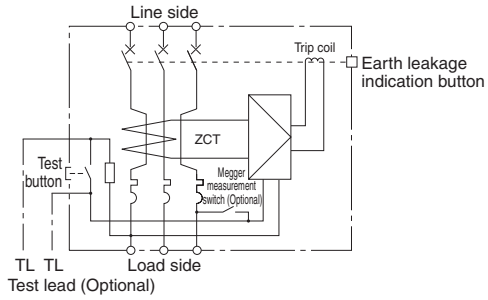

7 Characteristics and Outline Dimensions

TemBreak2

Earth Leakage Circuit Breakers for motor protection

ZE100-NM

Ratings and Specifications

Frame size (A)			100
Type			**ZE100-NM**
Number of poles			3
■ Ratings			
Rated capacity of motor and rated current of circuit breaker Calibrated at 40°C	(A)	(kW) 200V	(kW) 415V
	60	15	30
	75	18.5	37
	90	22	45
Remarks: Select according to the full load current of the motor.			
Rated impulse withstand voltage 〔U_{imp}〕 kV			6
Rated operational voltage AC V	Instantaneous tripping type		100-440 common
	Operable voltage fluctuation range V		80–484
Rated sensitivity current mA	Instantaneous tripping type		30
			100/200/500 selectable
	Max. operating time sec		0.1
■ Rated breaking capacity, kA			
JIS C 8201-2-2 Ann.2 I_{cu}(sym)	AC	440V	10
		415V	10
		240V	25 ⑥⑨
		100V	25
Weight (◉ marked standard type) kg			0.5
■ Connections and Mountings			
Front-connected (FC)	Terminal screws		◉
	With extension bars		○ ⑤③
Rear-connected (RC)	Flat bar studs		○
Plug-in (PM)	For switchboards	High-performance (PMB)	—
		Standard (PMC)	—
	For distribution boards (PMD)		—
Flush-mounted (FP)	With flat bar studs		○
Draw-out type (DR)			—
TemPlug70 (PG)			—
DIN rail mount			◉
■ Accessories (optional)			**Symbol**
Externally mounted: Motor operator			M C —
External operating handle	Breaker-mounted		H B △
	Door-mounted (variable depth)		H P △
Toggle extension			H A —
Mechanical interlock	Slide type		M S ●
	Rear-connected type		M B —
	Link type		M L —
	Wire type		M W —
Toggle holder			H H —
Toggle lock			H L ●
Terminal cover	For front-connected		C F ●
	For rear-connected and plug-in		C R ● ②
Terminal block for lead			T F ●
Door flange			D F —
CE marking			Non
Earth leakage trip mechanism (Current operation type)			Electronic
Overcurrent trip mechanism			Hydraulic-magnetic type
Earth leakage indication			Mechanical button
Colour of cover			Light Grey
Trip button (Colour)			Yes (Red)
Suitability for isolation			Yes
Reverse connection			Non

Notes:
◉ : Standard. This configuration used unless otherwise specified. ○ : Optional standard. Specify when ordering.
● : "yes" or "available". — : "no" or "not available". △ : Custom-built product. Please contact us for details.
② : Supplied as standard. ④⑤ : A wire clamping terminal is provided. ⑤③ : For the extension bars, please place the order separately in parts. ⑥⑨ : This is the value for 230V AC.

Remark: The rated sensitivity current is set to 100mA before delivery.

Time/Current characteristic curves

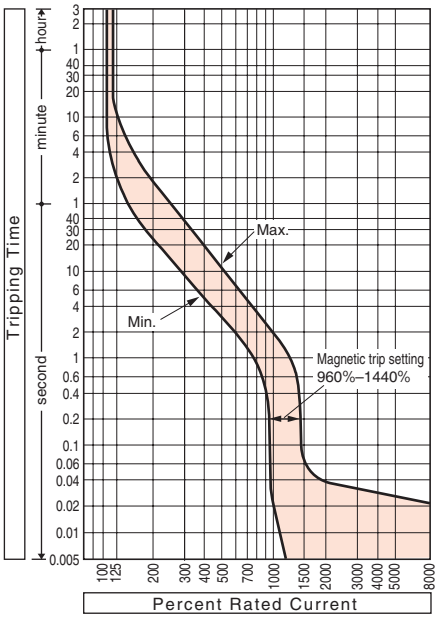

Ambient compensating curves

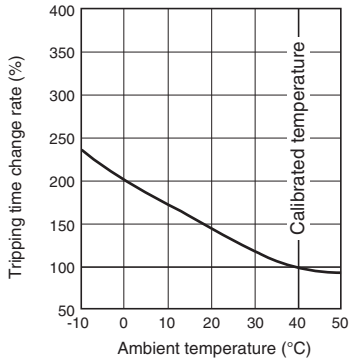

Earth leakage trip characteristic

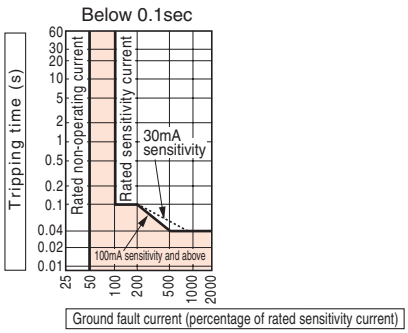

Combinations of Internally Mounted Accessories (Optional)

Poles	AX Auxiliary switch	AL Alarm switch	SH Shunt trip	UV Under voltage trip	MG Megger measurement switch	TL Test lead	AX AL SH	AX AL UV	MG AX AL UV	TL AX AL
3										

Toggle — Left pole / Right pole

Note: For auxiliary switches or alarm switches, left-hand mounting has priority.
Shunt trip and undervoltage trip are mounted on the side of the circuit breaker.In the case of flush-mounted type (FP), it cannot be installed.

Outline dimensions (mm) ZE100-NM

Front-connected

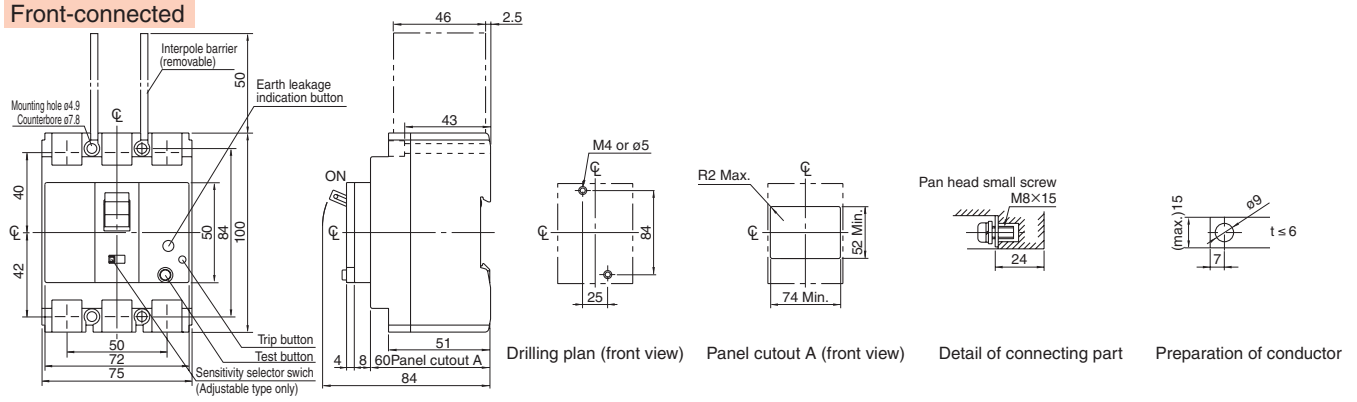

Rear-connected

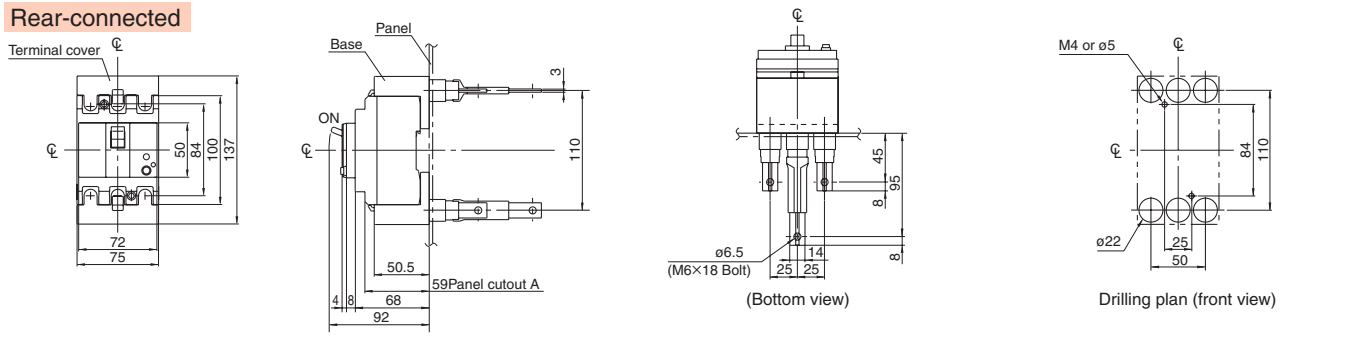

Note: The mounting direction of the studs cannot be changed. Please specify the mounting direction when ordering.
The line side and load side will be factory installed in the horizontal direction unless otherwise specified.

Flush-mounted

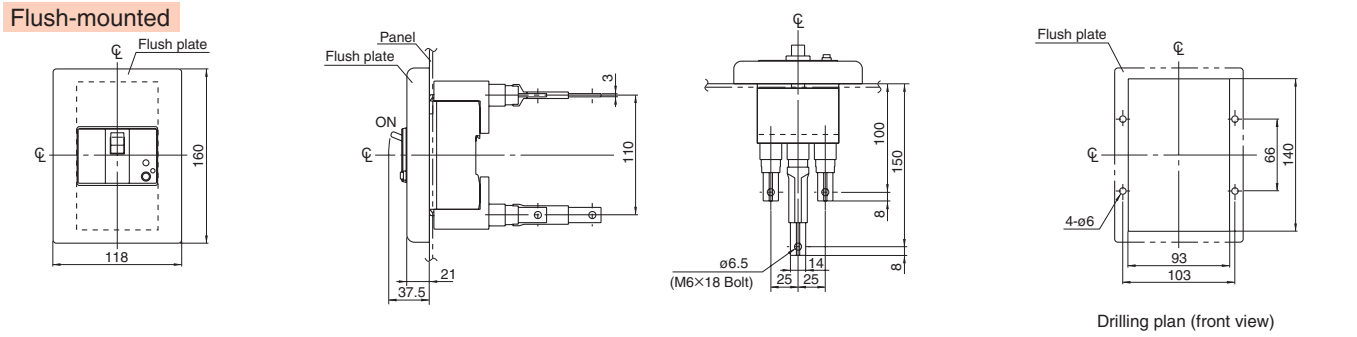

Note: The mounting direction of the studs cannot be changed. Please specify the mounting direction when ordering.
The line side and load side will be factory installed in the horizontal direction unless otherwise specified.

Control circuit

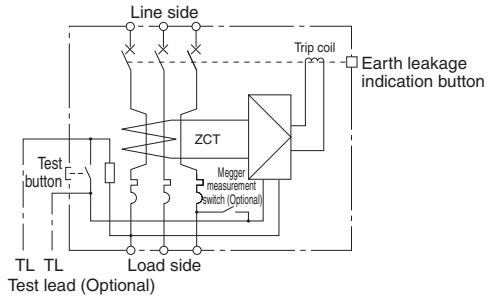

7 Characteristics and Outline Dimensions TemBreak PRO

Earth Leakage Circuit Breakers for motor protection

ZS100-SM

Ratings and Specifications

Frame size (A)		100			
Type		**ZS100-SM**			
Number of poles		3			
■ Ratings					
Rated capacity of motor and rated current of circuit breaker Calibrated at 40°C	(A)	(kW) 200V	(kW) 415V		
	16	3.7	7.5		
	24	5.5	11		
	32	7.5	15		
	40	—	18.5		
	45	11	22		
	60	15	30		
	75	18.5	37		
	90	22	45		
Remarks: Select according to the full load current of the motor.	100	—	55		
Rated impulse withstand voltage (Uimp) kV		8			
Rated operational voltage AC V — Instantaneous tripping type		100-440 common			
Rated operational voltage AC V — Operable voltage fluctuation range V		80—484			
Rated sensitivity current mA — Instantaneous tripping type		30			
Rated sensitivity current mA		100/200/500 selectable			
Rated sensitivity current mA — Max. operating time sec		0.1			
■ Rated breaking capacity, kA					
JIS C 8201-2-2 Ann.2 I_{cu}(sym) AC	440V	25			
	415V	30			
	240V	50			
	100V	50			
Weight (◉ marked standard type) kg		0.95			
■ Connections and Mountings					
Front-connected (FC) — Terminal screws		◉ ④			
Front-connected (FC) — With extension bars		○ ⑤③			
Rear-connected (RC) — Flat bar studs		○			
Plug-in (PM) For switchboards — High-performance (PMB)		—			
Plug-in (PM) For switchboards — Standard (PMC)		—			
Plug-in (PM) For distribution boards (PMD)		—			
Flush-mounted (FP) — With flat bar studs		○			
Draw-out type (DR)		—			
TemPlug70 (PG)		○			
DIN rail mount		○ ⑪			
■ Accessories (optional)	Symbol				
Externally mounted: Motor operator	M C	—			
External operating handle — Breaker-mounted	H B	●			
External operating handle — Door-mounted (variable depth)	H P	●			
Toggle extension	H A	—			
Mechanical interlock — Slide type	M S	●			
Mechanical interlock — Rear-connected type	M B	—			
Mechanical interlock — Link type	M L	—			
Mechanical interlock — Wire type	MW	—			
Toggle holder	H H	●			
Toggle lock	H L	●			
Terminal cover — For front-connected	C F	●			
Terminal cover — For rear-connected and plug-in	C R	●			
Terminal block for lead	T F	●			
Door flange	D F	—			
CE marking		Non			
Earth leakage trip mechanism (Current operation type)		Electronic			
Overcurrent trip mechanism		Thermal-magnetic			
Earth leakage indication		Mechanical button			
Colour of cover		Grey Blue			
Trip button (Colour)		Yes (Red)			
Suitability for isolation		Yes			
Reverse connection		Yes ⑫			

Notes:
◉ : Standard. This configuration used unless otherwise specified. ○ : Optional standard. Specify when ordering.
● : "yes" or "available". — : "no" or "not available". ④ : 50A or less is the M5 wire clamping terminal.
⑪ : Please order the DIN rail adapter separately. See page 6-152. ⑤③ : For the extension bars, please place the order separately in parts. ⑫ : There are some limitations. See page 5-23 for details.

Remark: The rated sensitivity current is set to 100mA before delivery.

Time/Current characteristic curves

16-45A

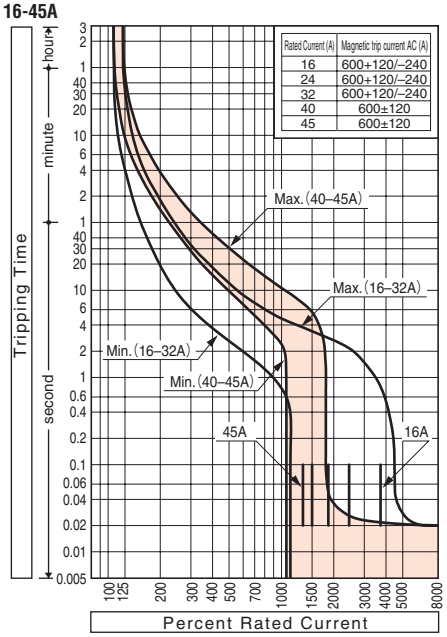

60-100A

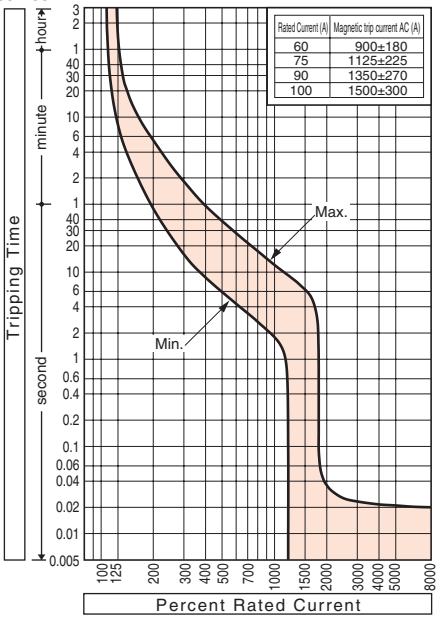

Ambient compensating curves

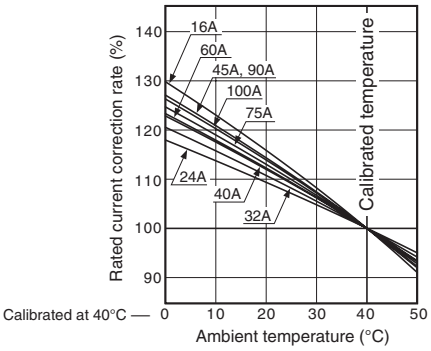

Combinations of Internally Mounted Accessories (Optional)

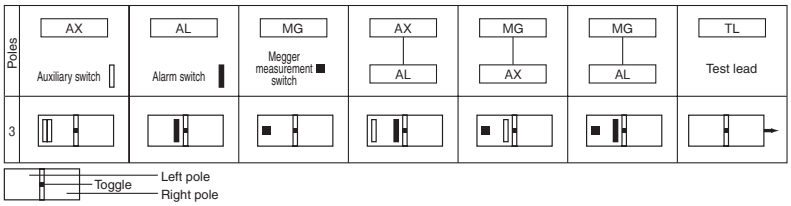

Outline dimensions (mm) ZS100-SM

Front-connected

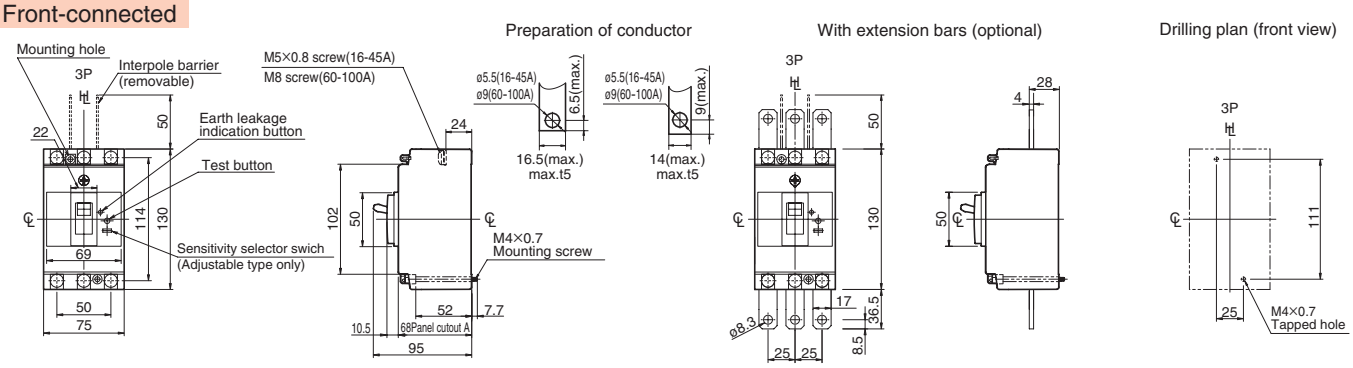

Rear-connected

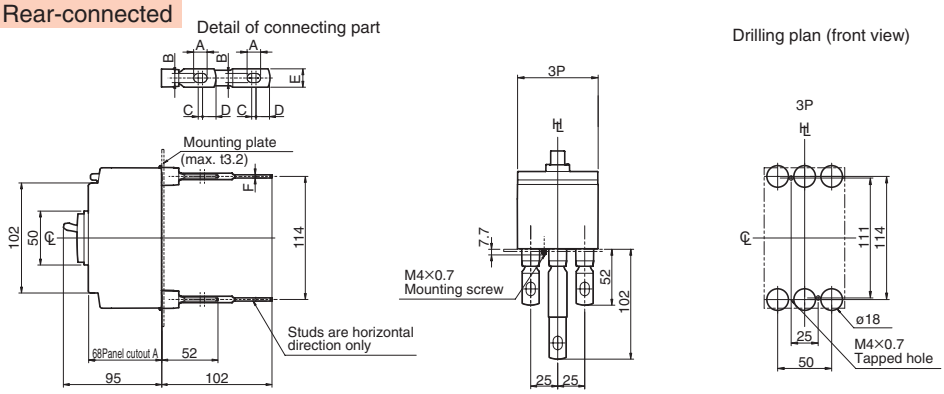

rated current (A)	A	B	C	D	E	F
16-45	10.5	6.5	4	13	16	4
60-100	12.5	8.5	4	13	16	5

Panel cutout A (front view)

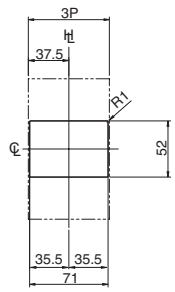

Panel cutout dimensions shown give an allowance of 1.0mm around the handle escutcheon.

Flush-mounted

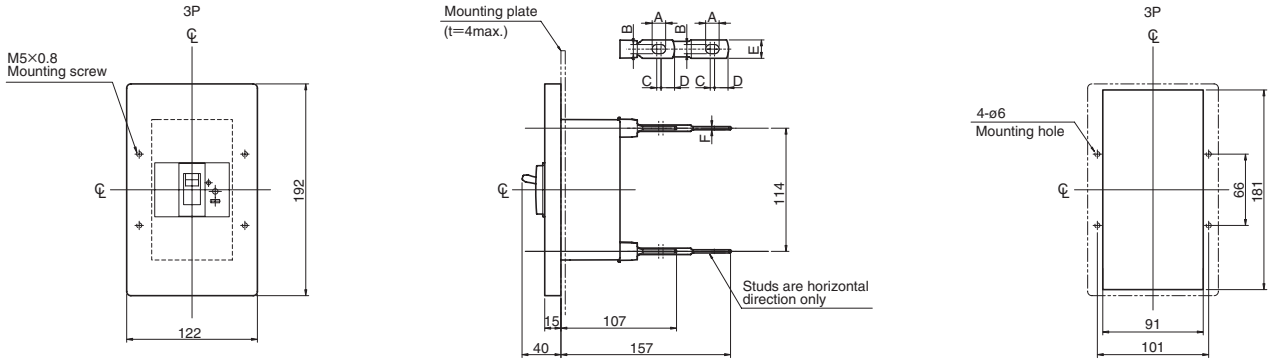

rated current (A)	A	B	C	D	E	F
16-45	10.5	6.5	4	13	16	4
60-100	12.5	8.5	4	13	16	5

Earth leakage trip characteristic

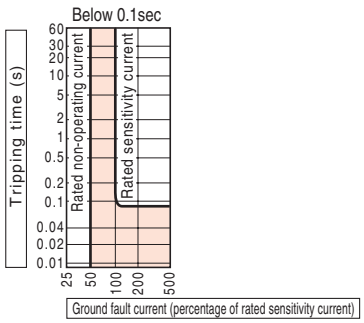

Control circuit

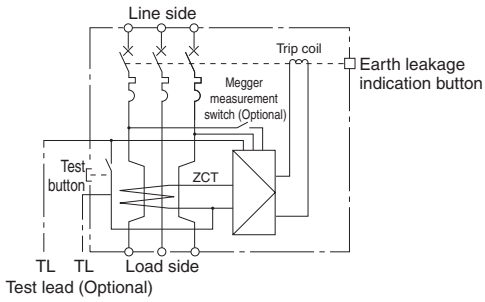

7 Characteristics and Outline Dimensions TemBreak PRO

Earth Leakage Circuit Breakers for motor protection

ZS250-SM

Ratings and Specifications

Frame size (A)		225			
Type		ZS250-SM			
Number of poles		3			
■ Ratings					
Rated capacity of motor and rated current of circuit breaker Calibrated at 40°C		(A) / (kW) 200V / 415V			
		125 / 30 / —			
		150 / 37 / 75			
		175 / 45 / 90			
		225 / 55 / 110			
Remarks: Select according to the full load current of the motor.					
Rated impulse withstand voltage 〔U_{imp}〕 kV		8			
Rated operational voltage AC V	Instantaneous tripping type	100-440 common			
	Operable voltage fluctuation range V	80—484			
Rated sensitivity current mA	Instantaneous tripping type	30			
		100/200/500 selectable			
	Max. operating time sec	0.1			
■ Rated breaking capacity, kA					
JIS C 8201-2-2 Ann.2 I_{cu}(sym)	AC 440V	30			
	415V	40			
	240V	85			
	100V	85			
Weight (◉ marked standard type) kg		1.7			
■ Connections and Mountings					
Front-connected (FC)	Terminal screws	◉			
	With extension bars	○ ㊸			
Rear-connected (RC)	Flat bar studs	○			
Plug-in (PM) For switchboards	High-performance (PMB)	—			
	Standard (PMC)	—			
For distribution boards (PMD)		—			
Flush-mounted (FP)	With flat bar studs	○			
Draw-out type (DR)		—			
TemPlug70 (PG)		○			
DIN rail mount		—			
■ Accessories (optional)		Symbol			
Externally mounted: Motor operator		M C	●		
External operating handle	Breaker-mounted	H B	●		
	Door-mounted (variable depth)	H P	●		
Toggle extension		H A	—		
Mechanical interlock	Slide type	M S	●		
	Rear-connected type	M B	—		
	Link type	M L	—		
	Wire type	M W	—		
Toggle holder		H H	●		
Toggle lock		H L	●		
Terminal cover	For front-connected	C F	●		
	For rear-connected and plug-in	C R	●		
Terminal block for lead		T F	●		
Door flange		D F	—		
CE marking			Non		
Earth leakage trip mechanism (Current operation type)			Electronic		
Overcurrent trip mechanism			Thermal-magnetic		
Earth leakage indication			Mechanical button		
Colour of cover			Grey Blue		
Trip button (Colour)			Yes (Red)		
Suitability for isolation			Yes		
Reverse connection			Yes		

Notes:

◉ : Standard. This configuration used unless otherwise specified. ○ : Optional standard. Specify when ordering.

● : "yes" or "available". — : "no" or "not available".

㊸ : For the extension bars, please place the order separately in parts.

Remark: The rated sensitivity current is set to 100mA before delivery.

Time/Current characteristic curves

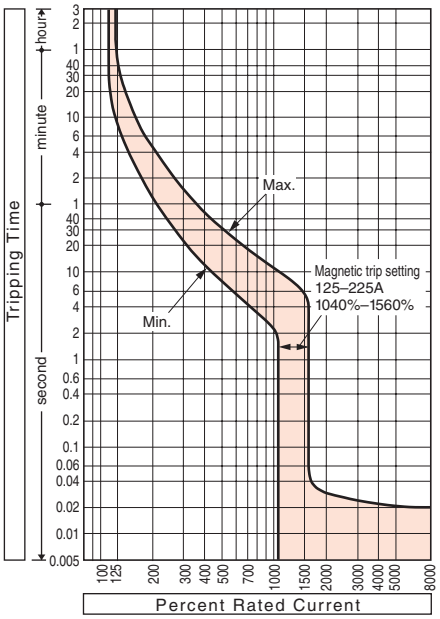

Ambient compensating curves

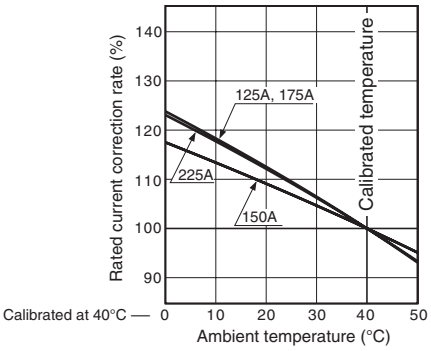

Earth leakage trip characteristic

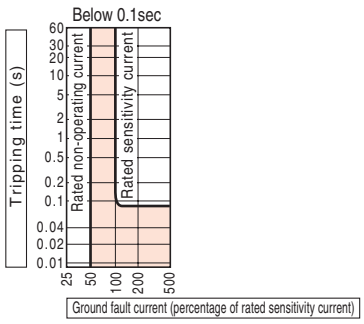

Combinations of Internally Mounted Accessories (Optional)

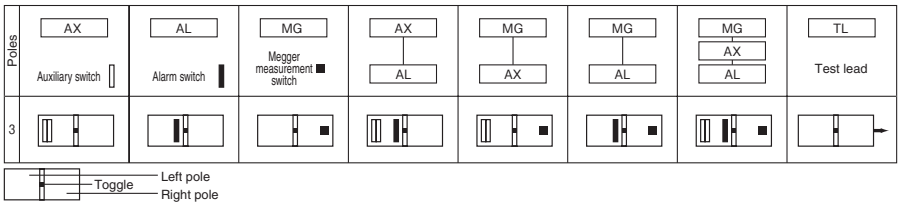

Outline dimensions (mm) ZS250-SM

Front-connected

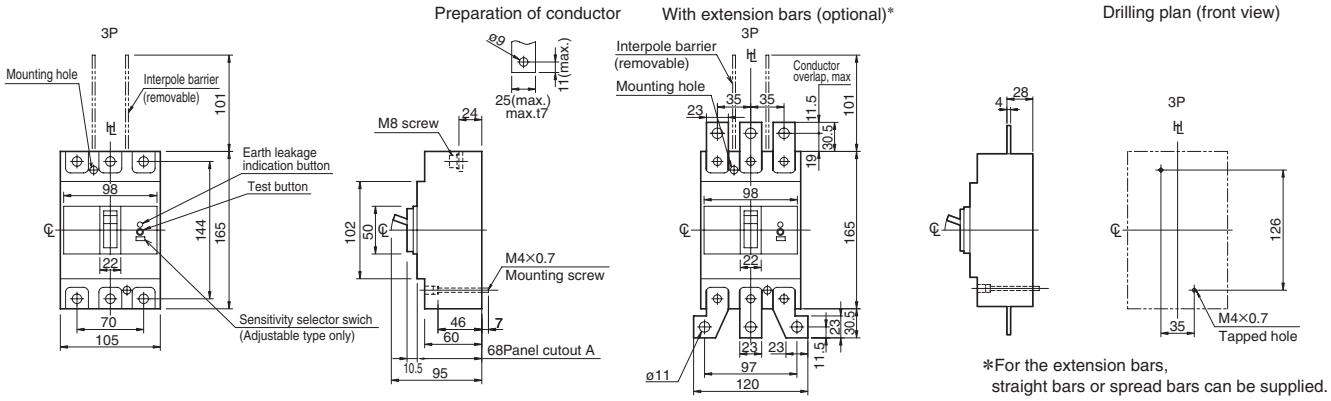

*For the extension bars, straight bars or spread bars can be supplied.

Rear-connected

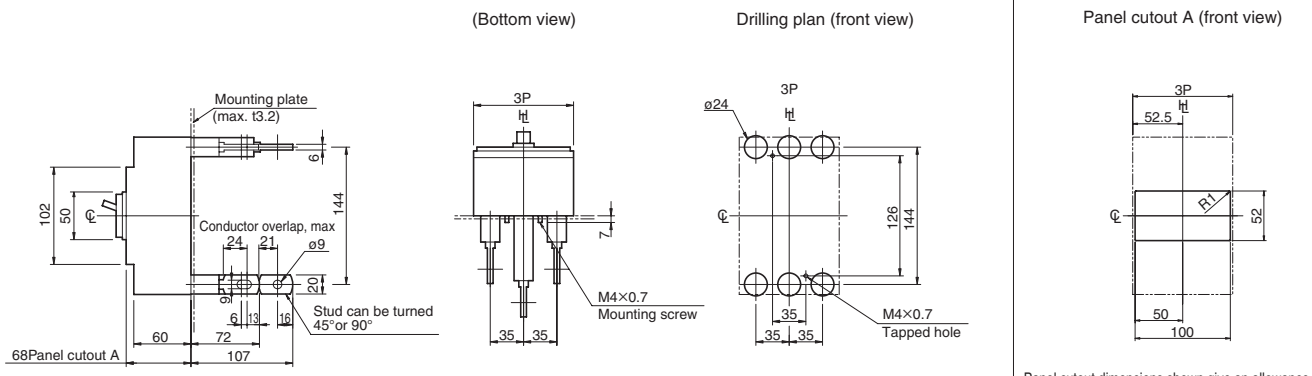

Note: Studs are factory installed in horizontal direction both on the line and load sides.

Panel cutout dimensions shown give an allowance of 1.0mm around the handle escutcheon.

Flush-mounted

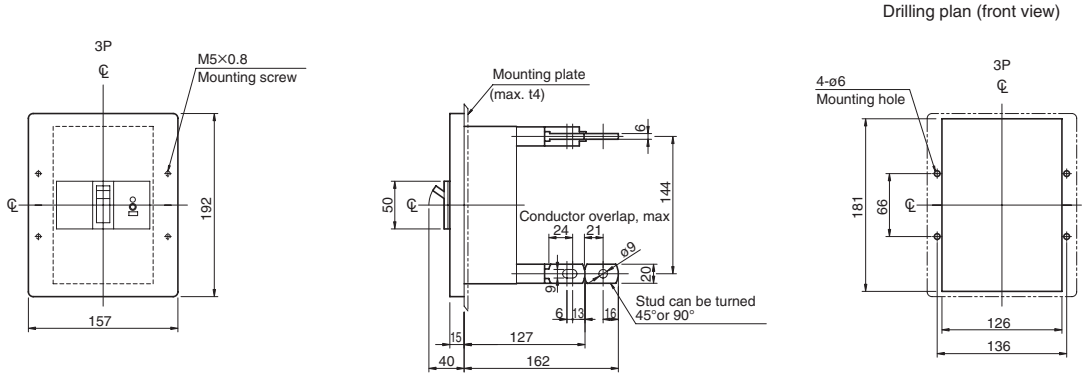

Control circuit

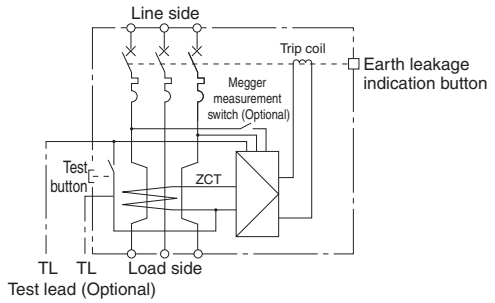

7 Characteristics and Outline Dimensions TemBreak PRO

Single phase 3-wire earth leakage circuit breakers with neutral phase open protection

PZE50-NFN, PZE125-NFN

Ratings and Specifications

Frame size (A)		50	100	125
Type		PZE50-NFN	PZE125-NFN	
Number of poles / Elements		3P3E ㊵	3P3E ㊵	3P3E ㊵
Phase and wires		1ø3W	1ø3W	1ø3W
■ Ratings				
Rated current, A		15 40	60	125
Calibrated at 40°C		20 50	75	
		30	100	
Rated operational voltage AC V		100/200	100/200	100/200
Rated impulse withstand voltage〔U_{imp}〕 kV		6	6	6
Rated sensitivity current mA	Instantaneous tripping type	30	30	30
			100/200/500 selectable	100/200/500 selectable
	Max. operating time sec	0.1	0.1	0.1
	Time delay tripping type	—	—	—
	Max. operating time sec	—	—	—
	Non-operating time sec	—	—	—
Single 3-phase neutral wire open phase protection characteristics	Rated operating overvoltage AC V	135	135	135
	Rated non-operating overvoltage AC V	120	120	120
	Rated overvoltage operating time (sec)	1 or less	1 or less	1 or less
■ Rated breaking capacity, kA				
JIS C 8201-2-2 Ann.2 I_{cu} (sym)	AC 100/200V	10	25	25
Weight (◉ marked standard type) kg		0.8	0.9	0.9
■ Connections and Mountings				
Front-connected (FC)	Terminal screws	◉ ㊺	◉	◉
	With extension bars	○ ㊸	○ ㊸	○ ㊸
Rear-connected (RC)	Flat bar studs	△	△	△
DIN rail mount		○ ⑪	○ ⑪	○ ⑪
■ Accessories (optional)	Symbol			
Externally mounted: Motor operator	M C	—	—	—
External operating handle: Breaker-mounted	H B	●	●	●
External operating handle: Door-mounted (variable depth)	H P	●	●	●
Toggle extension	H A	—	—	—
Mechanical interlock: Slide type	M S	●	●	●
Mechanical interlock: Link type	M L	—	—	—
Mechanical interlock: Wire type	MW	—	—	—
Toggle holder	H H	●	●	●
Toggle lock	H L	●	●	●
Terminal cover: For front-connected	C F	●	●	●
Terminal cover: For rear-connected	C R	●	●	●
Terminal block for lead	T F	●	●	●
Door flange	D F	—	—	—
CE marking		Non	Non	Non
Earth leakage trip mechanism (Current operation type)		Electronic	Electronic	Electronic
Overcurrent trip mechanism		Thermal-magnetic	Thermal-magnetic	Thermal-magnetic
Overvoltage / Earth leakage indication		Mechanical button	Mechanical button	Mechanical button
Colour of cover		Grey Blue	Grey Blue	Grey Blue
Trip button (Colour)		Yes (Red)	Yes (Red)	Yes (Red)
Suitability for isolation		Yes	Yes	Yes
Reverse power flow circuit		Non	Non	Non

Notes:

◉ : Standard. This configuration used unless otherwise specified.
○ : Optional standard. Specify when ordering.
● : "yes" or "available". — : "no" or "not available". △ : Custom-built product. Please contact us for details.
⑪ : Please order the DIN rail adapter separately. See page 6-152.
㊵ : They can also be applied to circuits where overcurrent flows in the neutral wire. Can be used as a main circuit breaker for photovoltaic power generation systems. See page 3-27 for details.
㊺ : A wire clamping terminal is provided.
㊸ : For the extension bars, please place the order separately in parts.

Remarks:

(1) : The rated sensitivity current is set to 100mA before delivery.
(2) : This circuit breaker is designed for single-phase 3-wire 100/200 V circuits only.
(3) : Connect the neutral wire to the central pole and the voltage lines (200V) to the left and right poles.
(4) : Be sure to connect the overvoltage detection lead wire to the OFF side of the circuit breaker.
If you connect it to the ON side, voltage will be applied to the OFF side even when the circuit breaker is turned OFF.
(5) : Connect the overvoltage detection lead wire to the neutral wire on the load side (OFF side) of the circuit.
The circuit breaker will not work unless this connection is made.
(6) : Connect the overvoltage detection lead wire to the end of the load side (OFF side) of the circuit.
(7) : The test button checks the overvoltage operation.

Time/Current characteristic curves

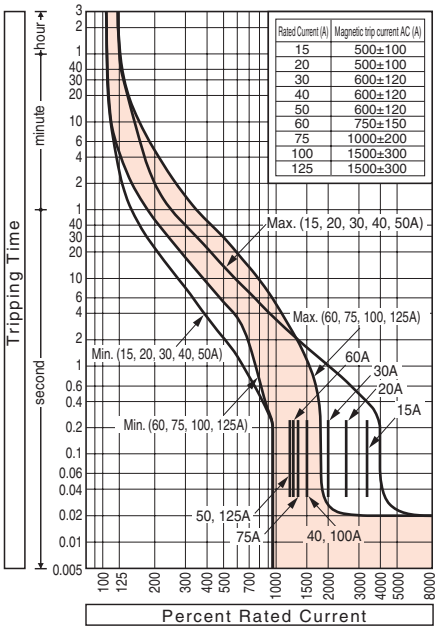

Ambient compensating curves

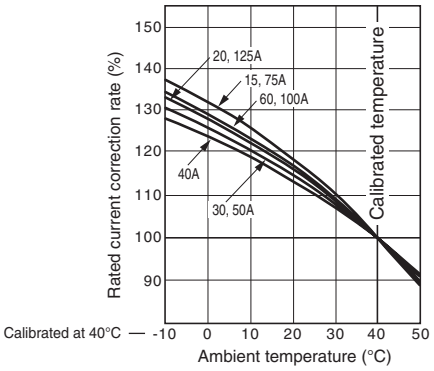

Combinations of Internally Mounted Accessories (Optional)

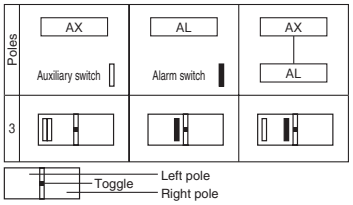

Outline dimensions (mm)

PZE50-NFN, PZE125-NFN

Front-connected

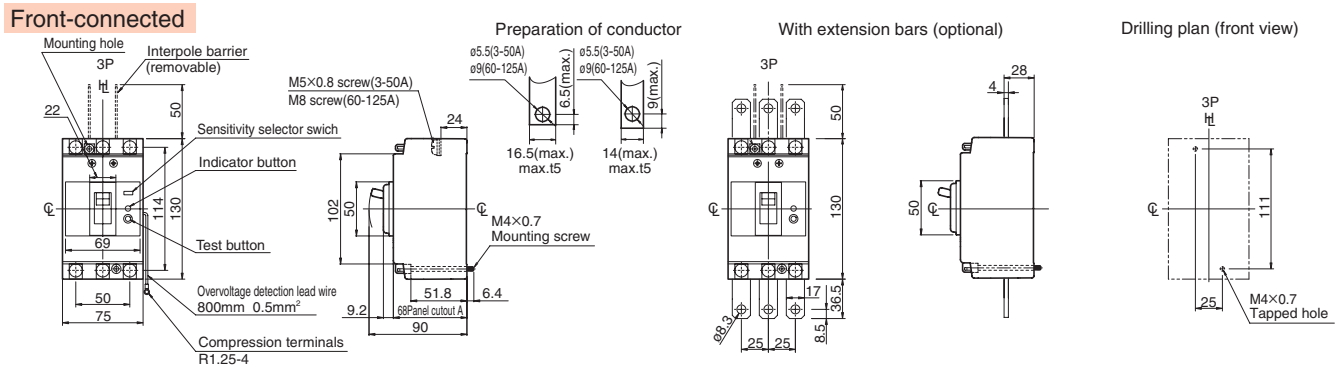

Panel cutout A (front view)

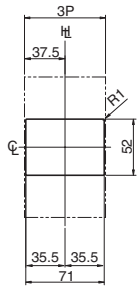

Panel cutout dimensions shown give an allowance of 1.0mm around the handle escutcheon.

Earth leakage trip characteristic

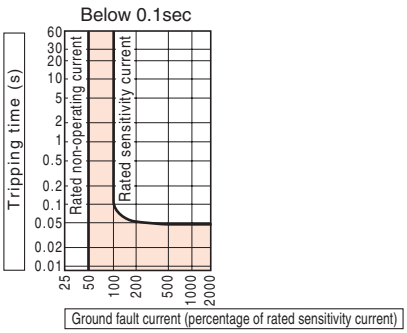

Single phase 3-wire circuit breakers with neutral phase open protection characteristics

The operating voltage of the single phase 3-wire circuit breakers with neutral phase open protection is set at more than 120V and less than 135V. If there is an abnormal voltage above 135V due to neutral wire open phase, the circuit breaker will reliably trip within 1 second.

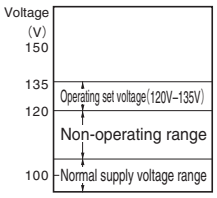

Control circuit

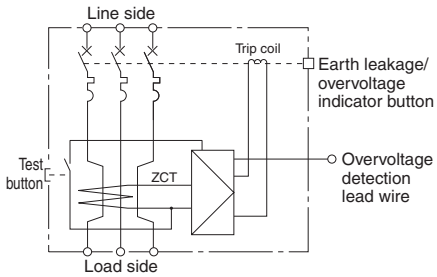

7 Characteristics and Outline Dimensions TemBreak PRO

Single phase 3-wire earth leakage circuit breakers with neutral phase open protection

ZNS125-SF

Ratings and Specifications

Frame size (A)		100	125
Type		ZNS125-SF	
Number of poles / Elements		3P3E ㊵	3P3E ㊵
Phase and wires		1ø3W	1ø3W
■ Ratings			
Rated current, A		15 50	125
Calibrated at 40°C		20 60	
		30 75	
		40 100	
Rated operational voltage AC V		100/200	100/200
Rated impulse withstand voltage〔U_{imp}〕 kV		8	8
Rated sensitivity current mA	Instantaneous tripping type	30	30
		100/200/500 selectable	100/200/500 selectable
	Max. operating time sec	0.1	0.1
	Time delay tripping type	100/200/500 selectable	100/200/500 selectable
	Max. operating time sec	0.45	0.45
	Non-operating time sec	0.1	0.1
Single 3-phase neutral wire open phase protection characteristics	Rated operating overvoltage AC V	135	135
	Rated non-operating overvoltage AC V	120	120
	Rated overvoltage operating time (sec)	1 or less	1 or less
■ Rated breaking capacity, kA			
JIS C 8201-2-2 Ann.2 I_{cu} (sym) AC 100/200V		50	50
Weight (◉ marked standard type) kg		0.95	0.95
■ Connections and Mountings			
Front-connected (FC)	Terminal screws	◉ ④	◉
	With extension bars	○ ⑤③	○ ⑤③
Rear-connected (RC)	Flat bar studs	△	△
DIN rail mount		○ ⑪	○ ⑪
■ Accessories (optional)		Symbol	
Externally mounted: Motor operator		M C	— —
External operating handle	Breaker-mounted	H B	● ●
	Door-mounted (variable depth)	H P	● ●
Toggle extension		H A	— —
Mechanical interlock	Slide type	M S	● ●
	Link type	M L	— —
	Wire type	MW	— —
Toggle holder		H H	● ●
Toggle lock		H L	● ●
Terminal cover	For front-connected	C F	● ●
	For rear-connected	C R	● ●
Terminal block for lead		T F	● ●
Door flange		D F	— —
CE marking		Non	Non
Earth leakage trip mechanism (Current operation type)		Electronic	Electronic
Overcurrent trip mechanism		Thermal-magnetic	Thermal-magnetic
Overvoltage / Earth leakage indication		Mechanical button	Mechanical button
Colour of cover		Grey Blue	Grey Blue
Trip button (Colour)		Yes (Red)	Yes (Red)
Suitability for isolation		Yes	Yes
Reverse power flow circuit		Yes ⑮	Yes ⑮

Notes:

◉ : Standard. This configuration used unless otherwise specified. ○ : Optional standard. Specify when ordering.
● : "yes" or "available". — : "no" or "not available". △ : Custom-built product. Please contact us for details.
④ : 50A or less is the M5 wire clamping terminal.
⑪ : Please order the DIN rail adapter separately. See page 6-152.
㊵ : They can also be applied to circuits where overcurrent flows in the neutral wire. Can be used as a main circuit breaker for photovoltaic power generation systems. See page 3-27 for details.
⑤③ : For the extension bars, please place the order separately in parts.
⑮ : Since the overvoltage and earth leakage detection circuit has a continuous rating specification, there is no need to turn off the power of the detection circuit using a megger test switch, etc.

Remarks:

(1) : The rated sensitivity current is set to 100mA before delivery.
(2) : This circuit breaker is designed for single-phase 3-wire 100/200 V circuits only.
(3) : Connect the neutral wire to the central pole and the voltage lines (200V) to the left and right poles.
(4) : Be sure to connect the overvoltage detection lead wire to the OFF side of the circuit breaker.
If you connect it to the ON side, voltage will be applied to the OFF side even when the circuit breaker is turned OFF.
(5) : Connect the overvoltage detection lead wire to the neutral wire on the load side (OFF side) of the circuit.
The circuit breaker will not work unless this connection is made.
(6) : Connect the overvoltage detection lead wire to the end of the load side (OFF side) of the circuit.
(7) : The test button checks the overvoltage operation.

Combinations of Internally Mounted Accessories (Optional)

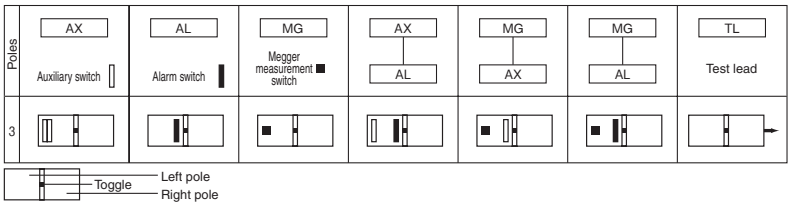

Time/Current characteristic curves

15-50A

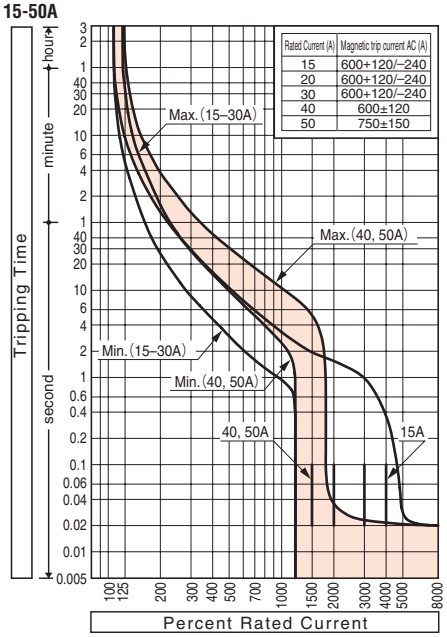

Rated Current (A)	Magnetic trip current AC (A)
15	600+120/–240
20	600+120/–240
30	600+120/–240
40	600±120
50	750±150

60-125A

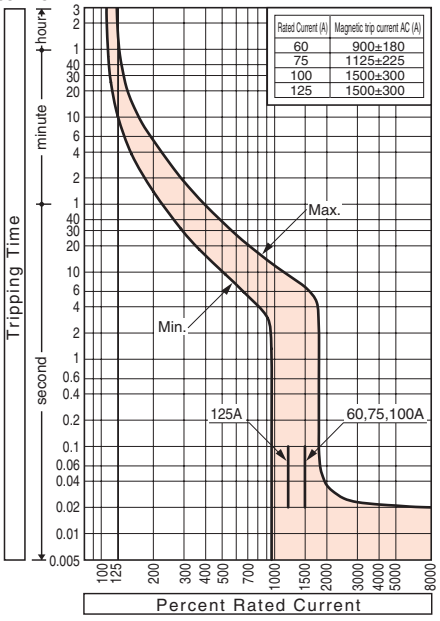

Rated Current (A)	Magnetic trip current AC (A)
60	900±180
75	1125±225
100	1500±300
125	1500±300

Ambient compensating curves

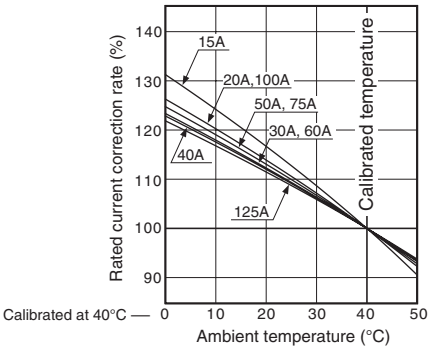

Outline dimensions (mm) ZNS125-SF

Front-connected

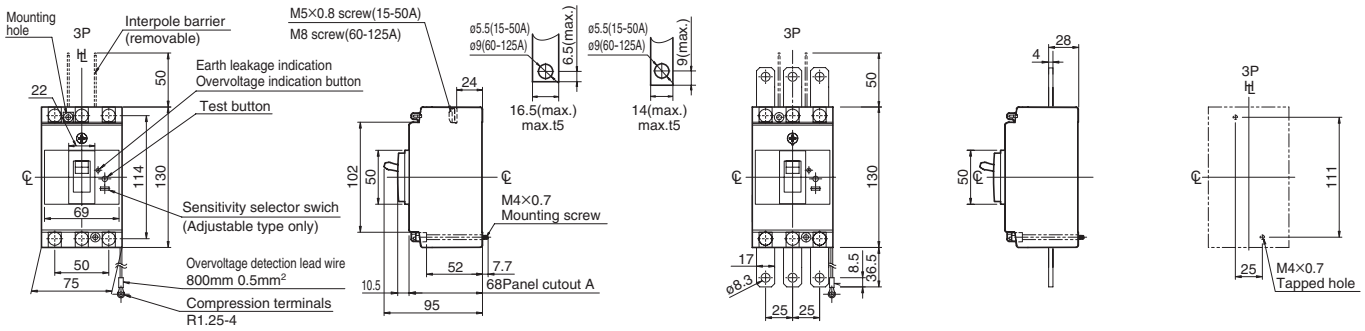

Panel cutout A (front view)

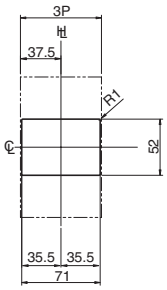

Panel cutout dimensions shown give an allowance of 1.0mm around the handle escutcheon.

Earth leakage trip characteristic

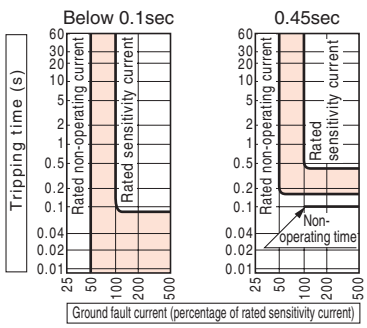

(Time delay tripping type will operate on 0.15-0.45sec for 0.45sec.)

Single phase 3-wire circuit breakers with neutral phase open protection characteristics

The operating voltage of the single phase 3-wire circuit breakers with neutral phase open protection is set at more than 120V and less than 135V. If there is an abnormal voltage above 135V due to neutral wire open phase, the circuit breaker will reliably trip within 1 second.

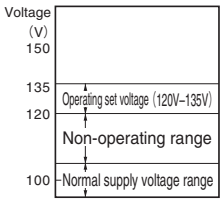

Control circuit

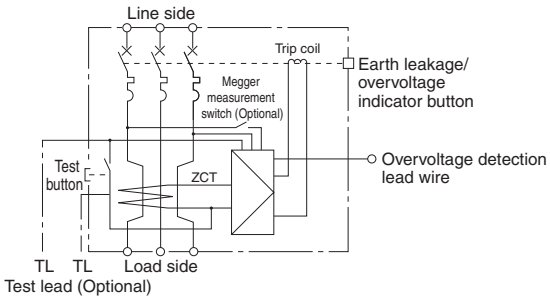

7 Characteristics and Outline Dimensions TemBreak PRO

Single phase 3-wire earth leakage circuit breakers with neutral phase open protection

ZNE250-SF, ZNS250-SF

Ratings and Specifications

Frame size (A)		225	250	225	250
Type		ZNE250-SF		ZNS250-SF	
Number of poles / Elements		3P3E ㊵	3P3E ㊵	3P3E ㊵	3P3E ㊵
Phase and wires		1ø3W	1ø3W	1ø3W	1ø3W
■ Ratings					
Rated current, A		125 225	250	125 225	250
Calibrated at 40°C		150		150	
		175		175	
		200		200	
Rated operational voltage AC V		100/200	100/200	100/200	100/200
Rated impulse withstand voltage〔U_{imp}〕 kV		8	8	8	8
Rated sensitivity current mA	Instantaneous tripping type	30	30	30	30
		100/200/500 selectable	100/200/500 selectable	100/200/500 selectable	100/200/500 selectable
	Max. operating time sec	0.1	0.1	0.1	0.1
	Time delay tripping type	100/200/500 selectable	100/200/500 selectable	100/200/500 selectable	100/200/500 selectable
	Max. operating time sec	0.45	0.45	0.45	0.45
	Non-operating time sec	0.1	0.1	0.1	0.1
Single 3-phase neutral wire open phase protection characteristics	Rated operating overvoltage AC V	135	135	135	135
	Rated non-operating overvoltage AC V	120	120	120	120
	Rated overvoltage operating time (sec)	1 or less	1 or less	1 or less	1 or less
■ Rated breaking capacity, kA					
JIS C 8201-2-2 Ann.2 I_{cu} (sym)	AC 100/200V	35	35	85	85
Weight (◉ marked standard type) kg		1.7	1.7	1.7	1.7
■ Connections and Mountings					
Front-connected (FC)	Terminal screws	◉	◉	◉	◉
	With extension bars	○ ㊸	○ ㊸	○ ㊸	○ ㊸
Rear-connected (RC)	Flat bar studs	△	△	△	△
DIN rail mount		—	—	—	—
■ Accessories (optional)	Symbol				
Externally mounted: Motor operator	M C	●	●	●	●
External operating handle: Breaker-mounted	H B	●	●	●	●
External operating handle: Door-mounted (variable depth)	H P	●	●	●	●
Toggle extension	H A	—	—	—	—
Mechanical interlock: Slide type	M S	●	●	●	●
Mechanical interlock: Link type	M L	—	—	—	—
Mechanical interlock: Wire type	MW	—	—	—	—
Toggle holder	H H	●	●	●	●
Toggle lock	H L	●	●	●	●
Terminal cover: For front-connected	C F	●	●	●	●
Terminal cover: For rear-connected	C R	●	●	●	●
Terminal block for lead	T F	●	●	●	●
Door flange	D F	—	—	—	—
CE marking		Non	Non	Non	Non
Earth leakage trip mechanism (Current operation type)		Electronic	Electronic	Electronic	Electronic
Overcurrent trip mechanism		Thermal-magnetic	Thermal-magnetic	Thermal-magnetic	Thermal-magnetic
Overvoltage / Earth leakage indication		Mechanical button	Mechanical button	Mechanical button	Mechanical button
Colour of cover		Grey Blue	Grey Blue	Grey Blue	Grey Blue
Trip button (Colour)		Yes (Red)	Yes (Red)	Yes (Red)	Yes (Red)
Suitability for isolation		Yes	Yes	Yes	Yes
Reverse power flow circuit		Yes ㉕	Yes ㉕	Yes ㉕	Yes ㉕

Notes:

◉ : Standard. This configuration used unless otherwise specified.
○ : Optional standard. Specify when ordering.
● : "yes" or "available". — : "no" or "not available". △ : Custom-built product. Please contact us for details.
㊵ : They can also be applied to circuits where overcurrent flows in the neutral wire. Can be used as a main circuit breaker for photovoltaic power generation systems. See page 3-27 for details.
㊸ : For the extension bars, please place the order separately in parts.
㉕ : Since the overvoltage and earth leakage detection circuit has a continuous rating specification, there is no need to turn off the power of the detection circuit using a megger test switch, etc.

Remarks:

(1) : The rated sensitivity current is set to 100mA before delivery.
(2) : This circuit breaker is designed for single-phase 3-wire 100/200 V circuits only.
(3) : Connect the neutral wire to the central pole and the voltage lines (200V) to the left and right poles.
(4) : Be sure to connect the overvoltage detection lead wire to the OFF side of the circuit breaker.
If you connect it to the ON side, voltage will be applied to the OFF side even when the circuit breaker is turned OFF.
(5) : Connect the overvoltage detection lead wire to the neutral wire on the load side (OFF side) of the circuit.
The circuit breaker will not work unless this connection is made.
(6) : Connect the overvoltage detection lead wire to the end of the load side (OFF side) of the circuit.
(7) : The test button checks the overvoltage operation.

Combinations of Internally Mounted Accessories (Optional)

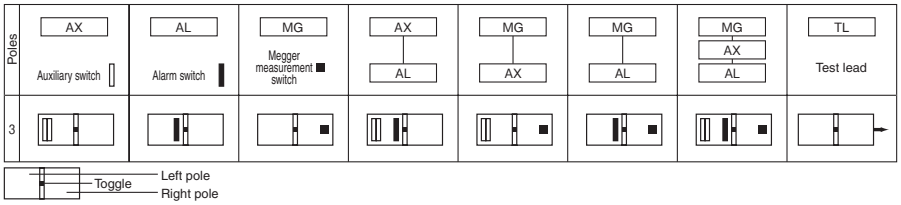

Time/Current characteristic curves

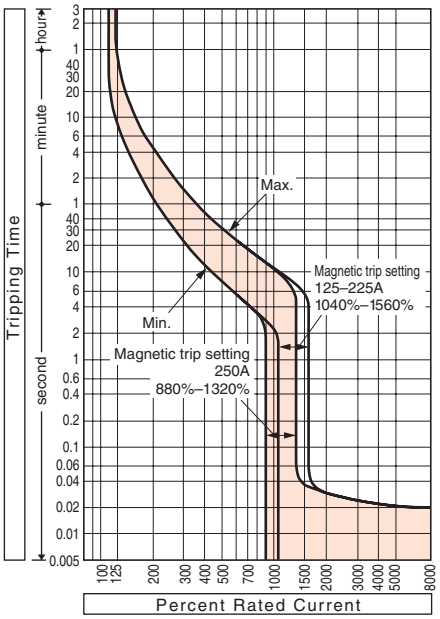

Ambient compensating curves

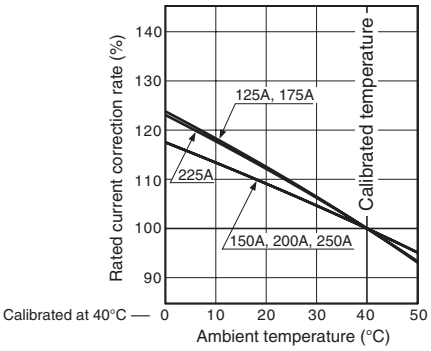

Earth leakage trip characteristic

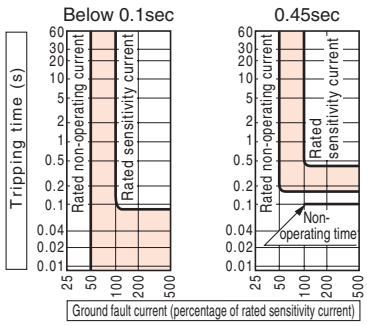

(Time delay tripping type will operate on 0.15-0.45sec for 0.45sec.)

Single phase 3-wire circuit breakers with neutral phase open protection characteristics

The operating voltage of the single phase 3-wire circuit breakers with neutral phase open protection is set at more than 120V and less than 135V. If there is an abnormal voltage above 135V due to neutral wire open phase, the circuit breaker will reliably trip within 1 second.

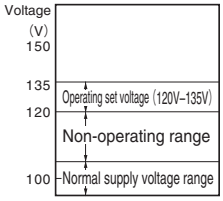

Outline dimensions (mm)

ZNE250-SF, ZNS250-SF

Front-connected

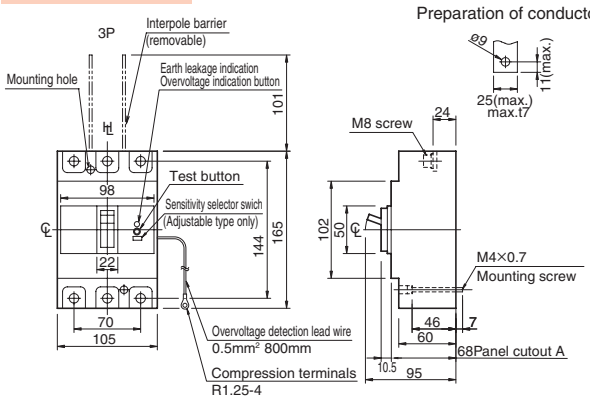

Preparation of conductor

With extension bars (optional)*

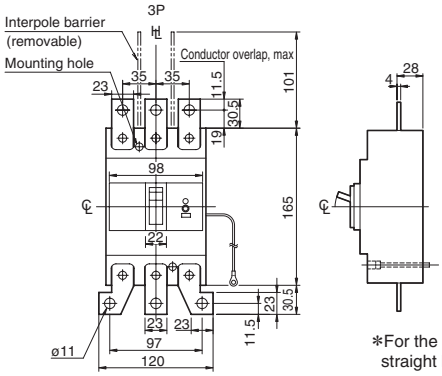

Drilling plan (front view)

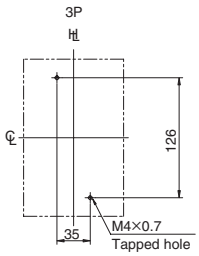

*For the extension bars, straight bars or spread bars can be supplied.

Panel cutout A (front view)

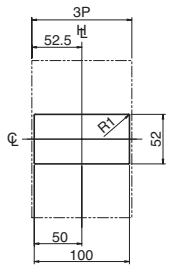

Panel cutout dimensions shown give an allowance of 1.0mm around the handle escutcheon.

Control circuit

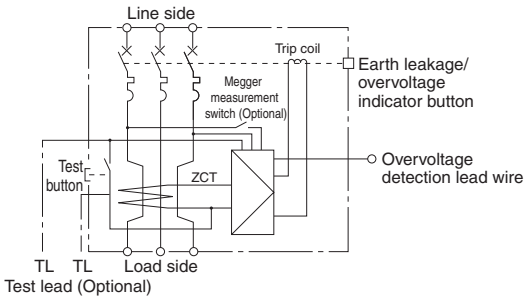

7 Characteristics and Outline Dimensions TemBreak PRO

Single phase 3-wire earth leakage circuit breakers with neutral phase open protection

ZNE400-NF, ZNS400-NF

Ratings and Specifications

Frame size (A)		400	400
Type		ZNE400-NF	ZNS400-NF
Number of poles / Elements		3P2E ⑱	3P2E ⑱
Phase and wires		1ø3W	1ø3W
■ Ratings			
Rated current, A		250	250
Calibrated at 40°C		300	300
		350	350
		400	400
Rated operational voltage AC V		100/200	100/200
Rated impulse withstand voltage〔U_{imp}〕 kV		8	8
Rated sensitivity current mA	Instantaneous tripping type	30	30
		100/200/500 selectable	100/200/500 selectable
	Max. operating time sec	0.1	0.1
	Time delay tripping type	100/200/500 selectable	100/200/500 selectable
	Max. operating time sec	0.45	0.45
	Non-operating time sec	0.1	0.1
Single 3-phase neutral wire open phase protection characteristics	Rated operating overvoltage AC V	135	135
	Rated non-operating overvoltage AC V	120	120
	Rated overvoltage operating time (sec)	1 or less	1 or less
■ Rated breaking capacity, kA			
JIS C 8201-2-2 Ann.2 I_{cu} (sym) AC 100/200V		35	85
Weight (◉ marked standard type) kg		5.2	5.2
■ Connections and Mountings			
Front-connected (FC)	Terminal screws	◉	◉
	With extension bars	○	○
Rear-connected (RC)	Flat bar studs	△	△
DIN rail mount		—	—
■ Accessories (optional)		Symbol	
Externally mounted: Motor operator		M C	● ●
External operating handle	Breaker-mounted	H B	● ●
	Door-mounted (variable depth)	H P	● ●
Toggle extension		H A	● ●
Mechanical interlock	Slide type	M S	● ●
	Link type	M L	— —
	Wire type	MW	— —
Toggle holder		H H	● ●
Toggle lock		H L	
Terminal cover	For front-connected	C F	● ●
	For rear-connected	C R	● ●
Terminal block for lead		T F	● ●
Door flange		D F	— —
CE marking		Non	Non
Earth leakage trip mechanism (Current operation type)		Electronic	Electronic
Overcurrent trip mechanism		Thermal-magnetic	Thermal-magnetic(adjustable)
Overvoltage / Earth leakage indication		Mechanical button	Mechanical button
Colour of cover		Grey Blue	Grey Blue
Trip button (Colour)		Yes (Red)	Yes (Red)
Suitability for isolation		Yes	Yes
Reverse power flow circuit		Yes ⑮	Yes ⑮

Notes:
◉ : Standard. This configuration used unless otherwise specified.
○ : Optional standard. Specify when ordering.
● : "yes" or "available". — : "no" or "not available".
△ : Custom-built product. Please contact us for details.
⑱ : Do not apply to circuits where overcurrent flows in the neutral wire.
⑮ : Since the overvoltage and earth leakage detection circuit has a continuous rating specification, there is no need to turn off the power of the detection circuit using a megger test switch, etc.

Remarks:
(1) : The rated sensitivity current is set to 100mA before delivery.
(2) : This circuit breaker is designed for single-phase 3-wire 100/200 V circuits only.
(3) : Connect the neutral wire to the central pole and the voltage lines (200V) to the left and right poles.
(4) : Be sure to connect the overvoltage detection lead wire to the OFF side of the circuit breaker. If you connect it to the ON side, voltage will be applied to the OFF side even when the circuit breaker is turned OFF.
(5) : Connect the overvoltage detection lead wire to the neutral wire on the load side (OFF side) of the circuit. The circuit breaker will not work unless this connection is made.
(6) : Connect the overvoltage detection lead wire to the end of the load side (OFF side) of the circuit.
(7) : The test button checks the overvoltage operation.

Combinations of Internally Mounted Accessories (Optional)

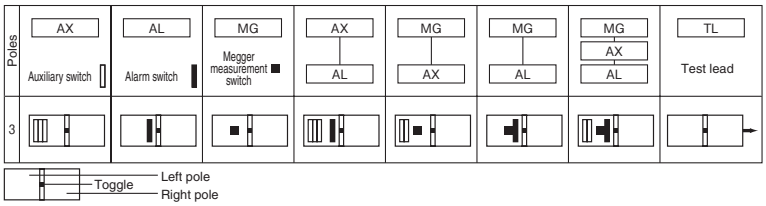

Time/Current characteristic curves ZNS400-NF

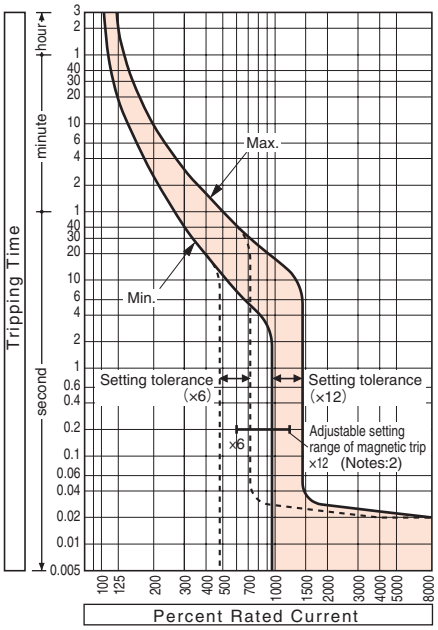

Ambient compensating curves

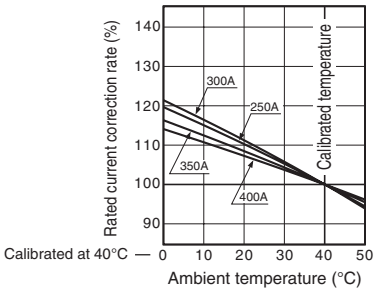

Magnetic trip pick-up current

Rated current (A) I_n×	Magnetic trip pick-up current (adjustable range) (A) 12	11	10	9	8	7	6
250	3000	2750	2500	2250	2000	1750	1500
300	3600	3300	3000	2700	2400	2100	1800
350	4200	3850	3500	3150	2800	2450	2100
400	4800	4400	4000	3600	3200	2800	2400

Notes (1) : Setting tolerance: ±20%.
(2) : **ZNE400-NF** type is a single point fixed setting of 10 times the rated current. Setting tolerance: ±10%.
(3) : The Time/Current characteristic curve is for adjustable instantaneous trip.
Remark (1) : If the model is adjustable and unless otherwise stated when ordering, the scale is factory set to ×12.

Earth leakage trip characteristic

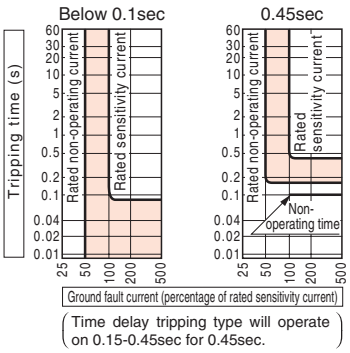

Time delay tripping type will operate on 0.15-0.45sec for 0.45sec.

Single phase 3-wire circuit breakers with neutral phase open protection characteristics

The operating voltage of the single phase 3-wire circuit breakers with neutral phase open protection is set at more than 120V and less than 135V. If there is an abnormal wire above 135V due to neutral wire open phase, the circuit breaker will reliably trip within 1 second.

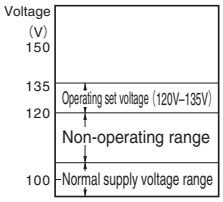

Outline dimensions (mm) — ZNE400-NF, ZNS400-NF

Front-connected

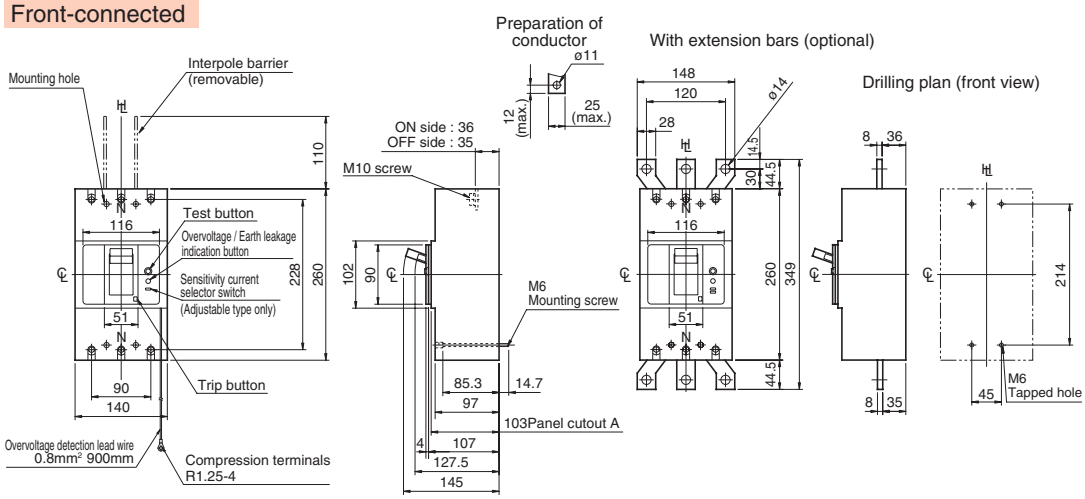

Panel cutout A (front view)

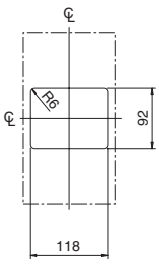

Panel cutout dimensions shown give an allowance of 1.0mm around the handle escutcheon.

Control circuit

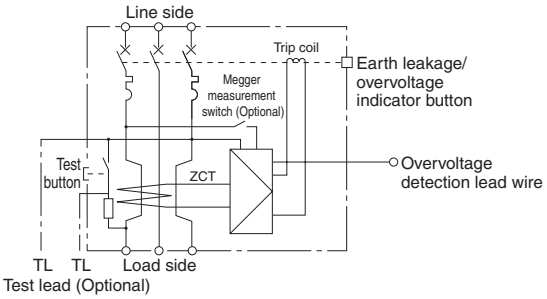

Time/Current characteristic curves ZNE400-NF

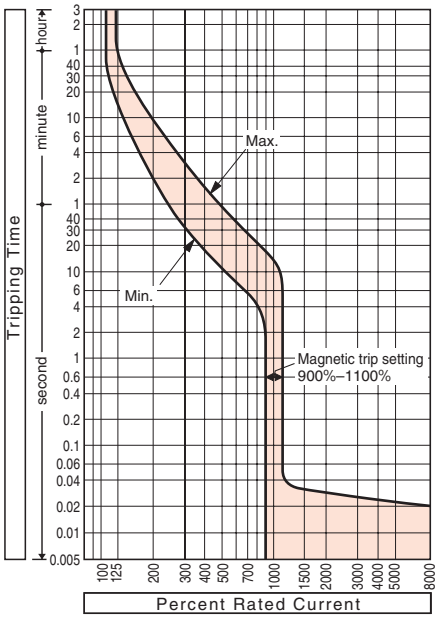

7 Characteristics and Outline Dimensions

Earth Leakage Circuit Breaker for distribution boards and control boards

TZ30EC, TZ50EE

Ratings and Specifications

Frame size (A)			30		50			
Type			TZ30EC		TZ50EE			
Number of poles			2	3	2	3		
Phase and wires	1ø2W	⑭	●	●	●	●		
	3ø3W, 1ø3W	⑮	●(1ø3W)	●	●(1ø3W)	●		
■ Ratings								
Rated current, A			5	30	5	30		
Calibrated at 40°C			10		10	40		
			15		15	50		
			20		20			
Rated operational voltage	AC V		100-240		100-240			
			common		common			
	Operable voltage fluctuation range V		80—264		80—264			
Rated sensitivity current mA	Instantaneous tripping type		15, 30		15, 30, 100			
	Max. operating time sec		0.1		0.1			
■ Rated breaking capacity, kA								
JIS C 8201-2-2 Ann.2	AC	240V	2.5		5			
I_{cu} (sym)		200V	2.5		5			
		100/200V	2.5		5			
		100V	2.5		5			
Weight (◉ marked standard type) kg			0.4	0.5	0.4	0.5		
■ Connections and Mountings								
Front-connected (FC)	Terminal screws		◉ ㊺		◉ ㊺			
DIN rail mount			○ ㊷		○ ㊷			
Clip-in chassis mount			◉		◉			
■ Accessories (optional)		Symbol						
Externally mounted: Toggle holder		H H	●		●			
Externally mounted: Toggle lock		H L	—		—			
Externally mounted: Toggle cap		H C	—		—			
Externally mounted: Terminal cover	For front-connected	C F	●		●			
Externally mounted: Terminal block for lead		T F	●		●			
CE marking			Non		Non			
Earth leakage trip mechanism (Current operation type)			Electronic		Electronic			
Overcurrent trip mechanism			Hydraulic-magnetic type		Hydraulic-magnetic type			
Earth leakage indication			Mechanical button		Mechanical button			
Colour of cover			Grey		Grey			
Trip button (Colour)			Yes (Red)		Yes (Red)			
Reverse connection			Yes		Yes			

Notes:

◉ : Standard. This configuration used unless otherwise specified.
○ : Optional standard. Specify when ordering.
● : "yes" or "available". — : "no" or "not available".
⑭ : When applying 3-pole type to a 1ø2W circuit, use both ends and do not use the central pole.
⑮ : When applying 3-pole type to a 1ø3W circuit, apply voltage to both ends and connect the neutral wire to the central pole.
㊺ : A wire clamping terminal is provided.
㊷ : Please order the DIN rail mounting bracket separately. (Order type: 50EE-RAIL, 1 set per unit)

Time/Current characteristic curves

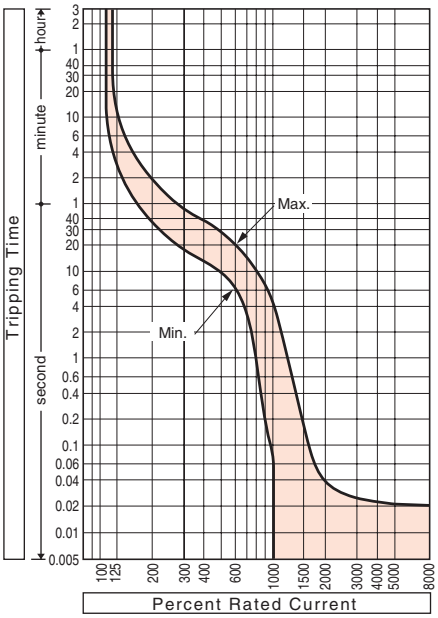

Ambient compensating curves

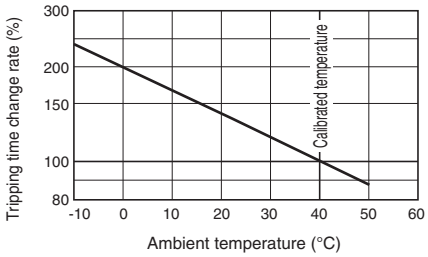

Earth leakage trip characteristic

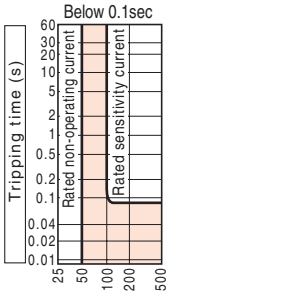

Combinations of Internally Mounted Accessories (Optional)

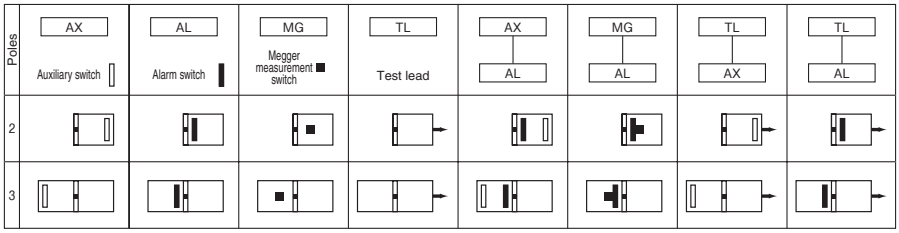

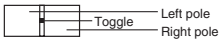

Note: If the Megger test switch is mounted, the auxiliary switch cannot be mounted.

Outline dimensions (mm) TZ30EC, TZ50EE

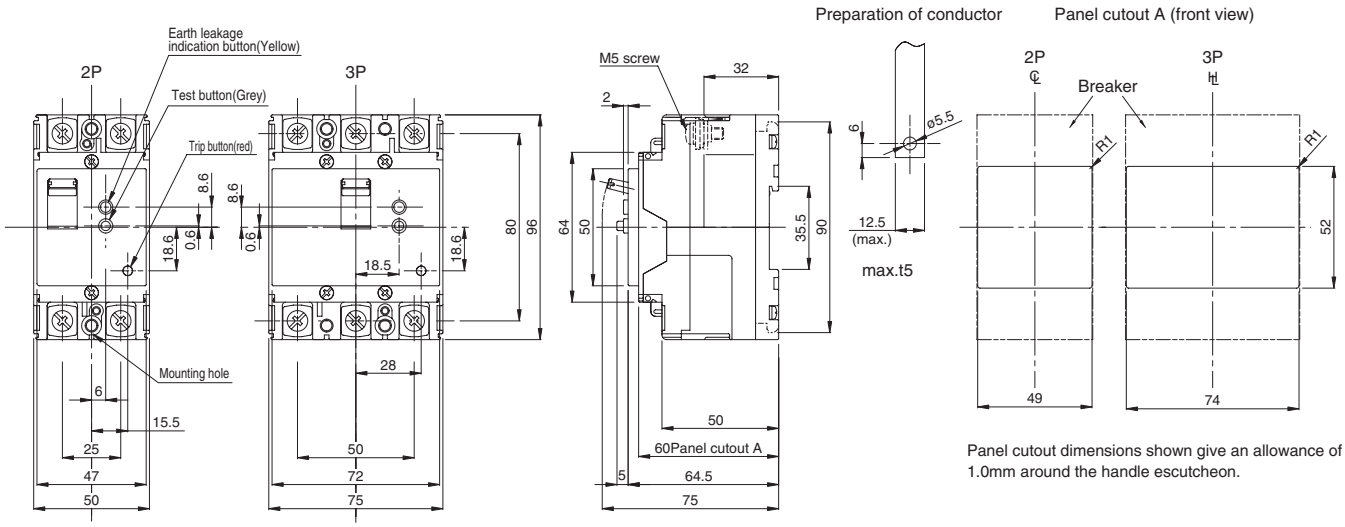

Panel cutout dimensions shown give an allowance of 1.0mm around the handle escutcheon.

Drilling plan

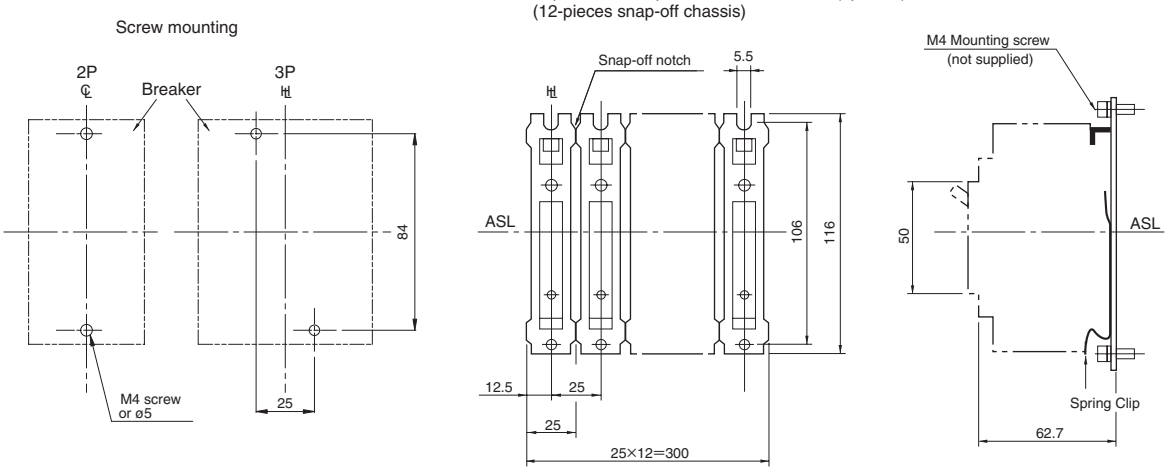

NOTE: 1.Clip-in chassis is notched between every two pieces to adjust number of pieces to number of breaker poles. (Bend once or twice to snap off.)

2.Screw clip-in chassis down at 4 or 5 pole intervals.

Control circuit

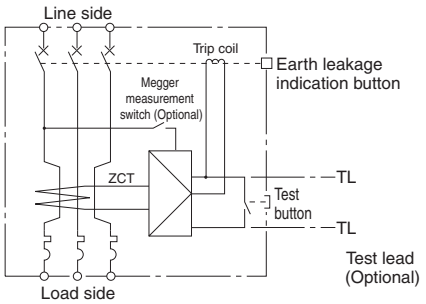

7 Characteristics and Outline Dimensions

Earth Leakage Circuit Breaker for distribution boards and control boards

TZ100EC

Ratings and Specifications

Frame size (A)			100			
Type			**TZ100EC**			
Number of poles			3			
Phase and wires	1ø2W	⑭	●			
	3ø3W, 1ø3W	⑮	●			
■ Ratings						
Rated current, A			60			
Calibrated at 40°C			75			
			100			
Rated operational voltage AC V			100-240			
			common			
	Operable voltage fluctuation range V		80—264			
Rated sensitivity current mA	Instantaneous tripping type		30, 100			
	Max. operating time sec		0.1			
■ Rated breaking capacity, kA						
JIS C 8201-2-2 Ann.2	AC	240V	5			
I_{cu} (sym)		200V	5			
		100/200V	5			
		100V	5			
Weight (◉ marked standard type) kg			0.5			
■ Connections and Mountings						
Front-connected (FC)	Terminal screws		◉			
DIN rail mount			○ ㊷			
Clip-in chassis mount			◉			
■ Accessories (optional)		**Symbol**				
Externally mounted: Toggle holder		H H	●			
Externally mounted: Toggle lock		H L	—			
Externally mounted: Toggle cap		H C	—			
Externally mounted: Terminal cover For front-connected		C F	●			
Externally mounted: Terminal block for lead		T F	●			
CE marking			Non			
Earth leakage trip mechanism			Electronic			
Overcurrent trip mechanism (Current operation type)			Hydraulic-magnetic type			
Earth leakage indication			Mechanical button			
Colour of cover			Grey			
Trip button (Colour)			Yes (Red)			
Reverse connection			Yes			

Notes:

◉ : Standard. This configuration used unless otherwise specified.
○ : Optional standard. Specify when ordering.
● : "yes" or "available". — : "no" or "not available".
⑭ : When applying 3-pole type to a 1ø2W circuit, use both ends and do not use the central pole.
⑮ : When applying 3-pole type to a 1ø3W circuit, apply voltage to both ends and connect the neutral wire to the central pole.
㊷ : Please order the DIN rail mounting bracket separately. (Order type: 50EE-RAIL, 1 set per unit)

Time/Current characteristic curves

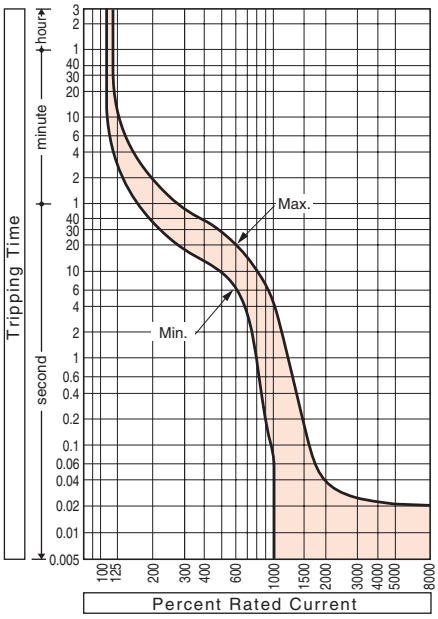

Ambient compensating curves

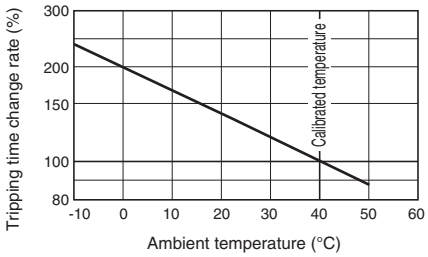

Earth leakage trip characteristic

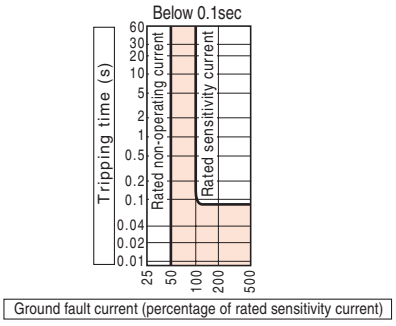

Combinations of Internally Mounted Accessories (Optional)

Poles	AX	AL	MG	TL	AX / AL	MG / AL	TL / AX	TL / AL	TL / AX / AL
	Auxiliary switch	Alarm switch	Megger measurement switch	Test lead					
3									

Toggle — Left pole / Right pole

Note: If the Megger test switch is mounted, the auxiliary switch cannot be mounted.

Outline dimensions (mm) TZ100EC

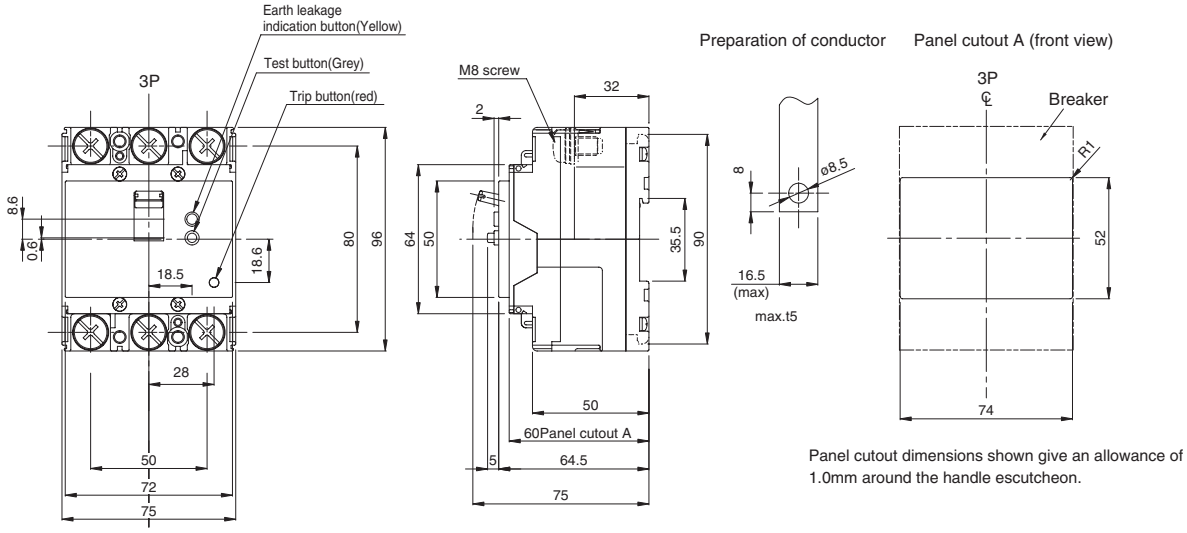

Panel cutout dimensions shown give an allowance of 1.0mm around the handle escutcheon.

Drilling plan

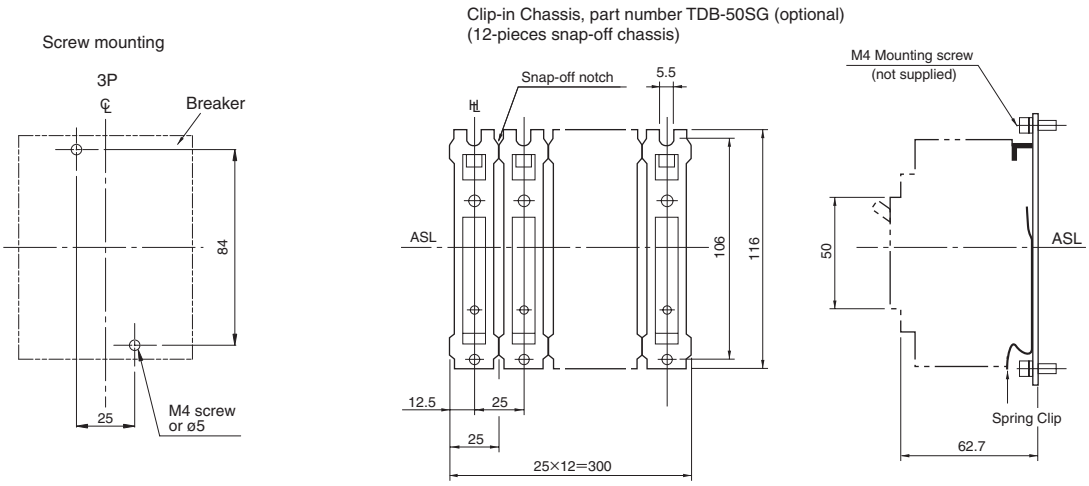

NOTE: 1.Clip-in chassis is notched between every two pieces to adjust number of pieces to number of breaker poles. (Bend once or twice to snap off.)

2.Screw clip-in chassis down at 4 or 5 pole intervals.

Control circuit

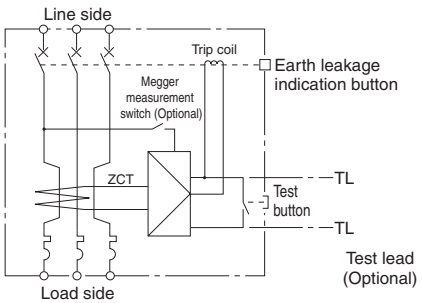

7 Characteristics and Outline Dimensions

Earth Leakage Circuit Breaker for distribution boards and control boards

TZ-51C, TZ-52C

Ratings and Specifications

Frame size (A)			50	50
Type			**TZ-51C**	**TZ-52C**
Number of poles			2 ㊸㊹	2
Phase and wires	1ø2W	⑭	●	●
	3ø3W, 1ø3W	⑮	—	●(1ø3W)
■ Ratings				
Rated current, A			15	15
Calibrated at 40°C			20	20
			30	30
Rated operational voltage	AC V		100	100-200 common
	Operable voltage fluctuation range V		80—121	80—242
Rated sensitivity current mA	Instantaneous tripping type		15, 30	15, 30
	Max. operating time sec		0.1	0.1
■ Rated breaking capacity, kA				
JIS C 8201-2-2 Ann.2	AC	240V	—	—
I_{cu} (sym)		200V	—	2.5
		100/200V	—	5
		100V	5	—
Weight (◉ marked standard type) kg			0.15	0.16
■ Connections and Mountings				
Front-connected (FC)	Terminal screws		◉ ㊽	◉ ㊽
DIN rail mount			—	—
Clip-in chassis mount			◉	◉
■ Accessories (optional)		Symbol		
Externally mounted	Toggle holder	H H	●	●
	Toggle lock	H L	—	—
	Toggle cap	H C	●	●
	Terminal cover For front-connected	C F	—	—
	Terminal block for lead	T F	—	—
CE marking			Non	Non
Earth leakage trip mechanism			Electronic	Electronic
Overcurrent trip mechanism (Current operation type)			Thermal-magnetic	Thermal-magnetic
Earth leakage indication			Mechanical button	Mechanical button
Colour of cover			Black	Black
Trip button (Colour)			Non	Non
Reverse connection			Non	Non

Notes:

◉ : Standard. This configuration used unless otherwise specified.
○ : Optional standard. Specify when ordering.
● : "yes" or "available". — : "no" or "not available".
㊸ : This is 2-pole 1-element. ㊽ : Distribution board branch conductors and busbar conductor supports are available. (Optional) ㊹ : **TZ-51C** does not support harmonics or surges. Please use **TZ-52C** if necessary.

Remark: TZ-51C and **TZ-52C** types are compatible with **TB-51C** and **TB-52C**.

Time/Current characteristic curves

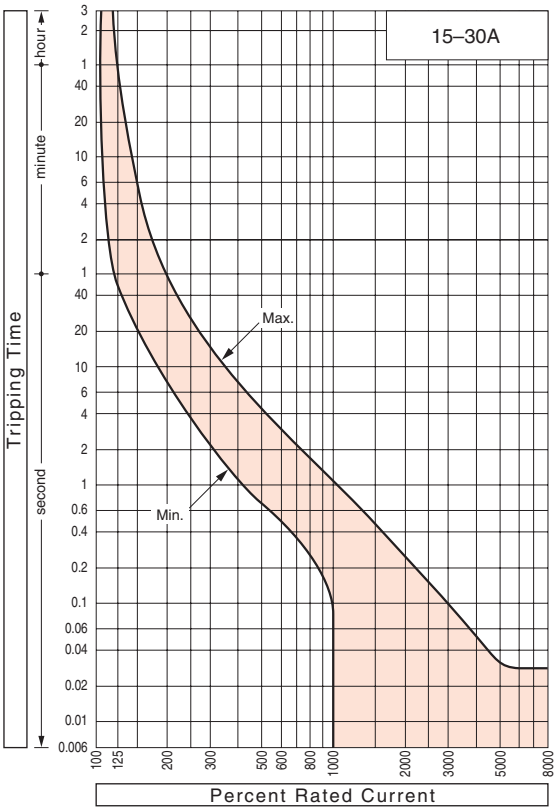

Ambient compensating curves

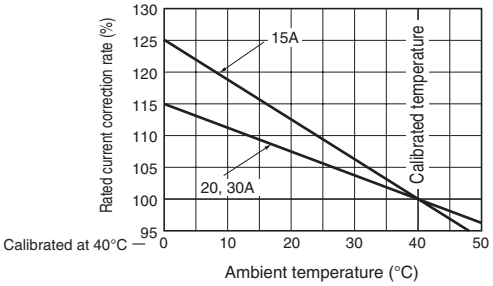

Support for distribution board branch conductors and busbar conductors

Prepare branch conductors (optional) and busbar mounting screws.

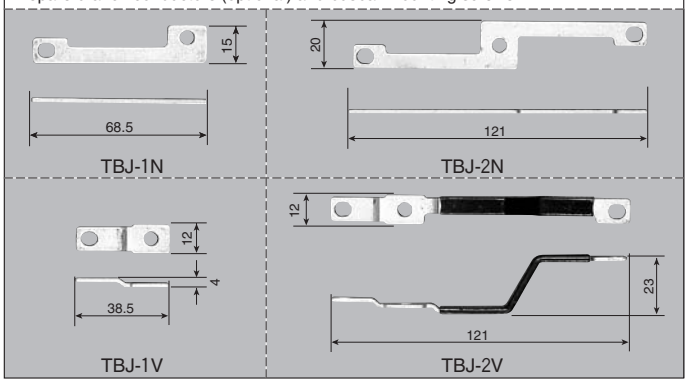

Type	Qty used / 1 row		
	Single-phase 100V	Single-phase 200V	Single-phase 100V / 200V
TBJ-1V	2	—	1
TBJ-2N	1	—	—
TBJ-2V	—	2	1
TBJ-1N	—	—	1

Note: For connection, see the conductor layout diagram on page 7-225.

Busbar conductor support type BJ-3S

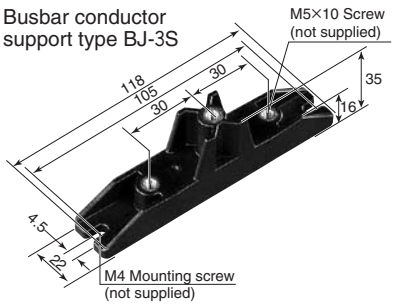

Earth leakage trip characteristic

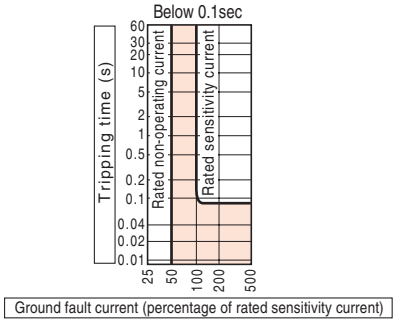

Outline dimensions (mm) TZ-51C, TZ-52C

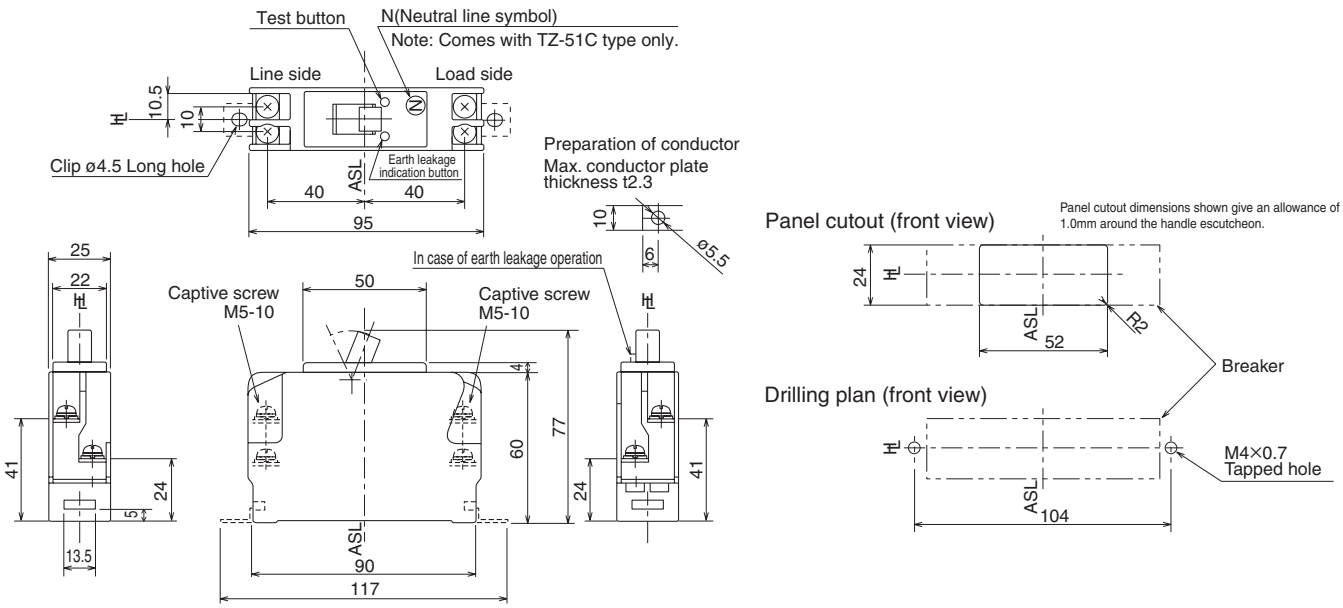

Clip-in chassis mounting dimensions

Clip-in Chassis, part number TDB-50SG (optional)
(12-pieces snap-off chassis)

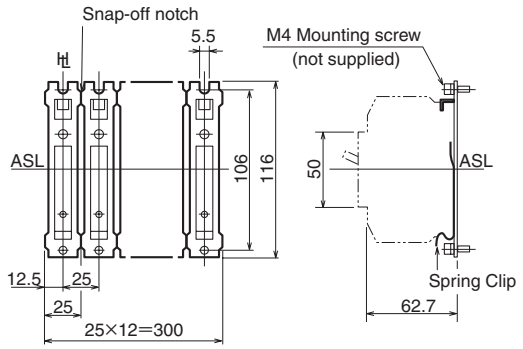

NOTE: 1.Clip-in chassis is notched between every two pieces to adjust number of pieces to number of breaker poles. (Bend once or twice to snap off.)

2.Screw clip-in chassis down at 4 or 5 pole intervals.

Conductor layout diagram

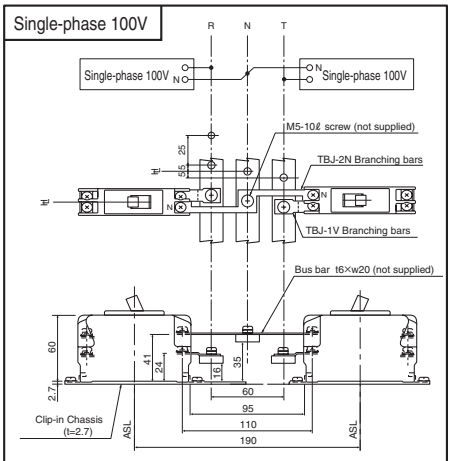

(Note) Tightening torque of branch conductor connecting screws: 2 to 2.9 Nm

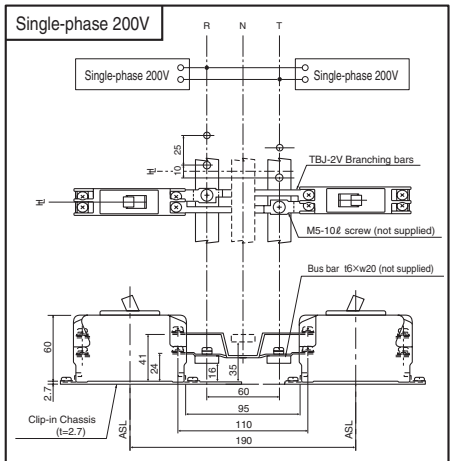

(Note) Tightening torque of branch conductor connecting screws: 2 to 2.9 Nm

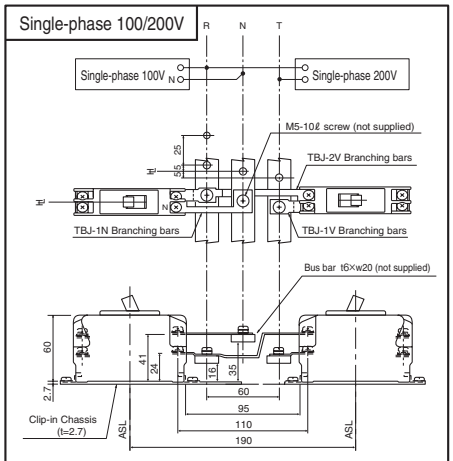

(Note) Tightening torque of branch conductor connecting screws: 2 to 2.9 Nm

Outline dimensions (mm) PS125-NE/PE

Front-connected

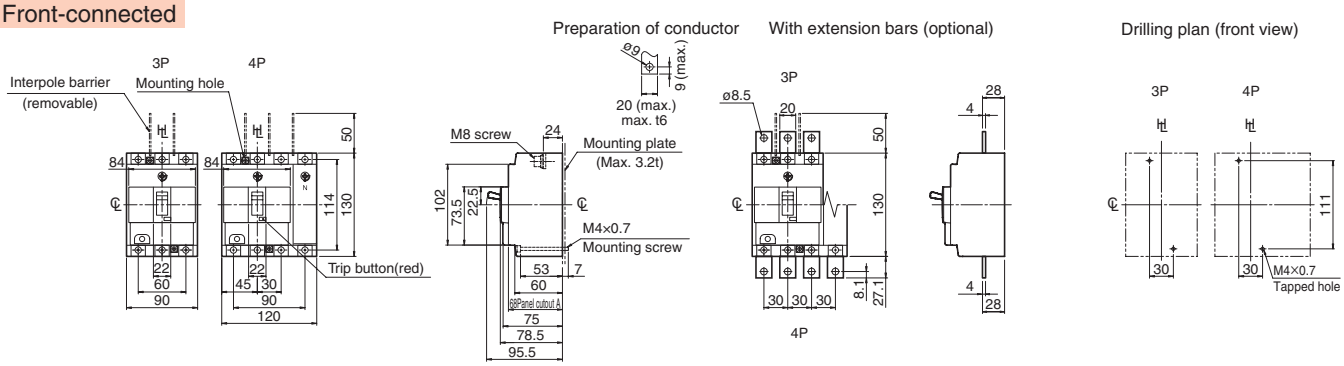

Panel cutout A (front view)

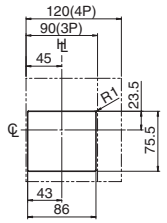

Panel cutout dimensions shown give an allowance of 1.0mm around the handle escutcheon.

Outline dimensions (mm) PS250-NE/PE

Front-connected

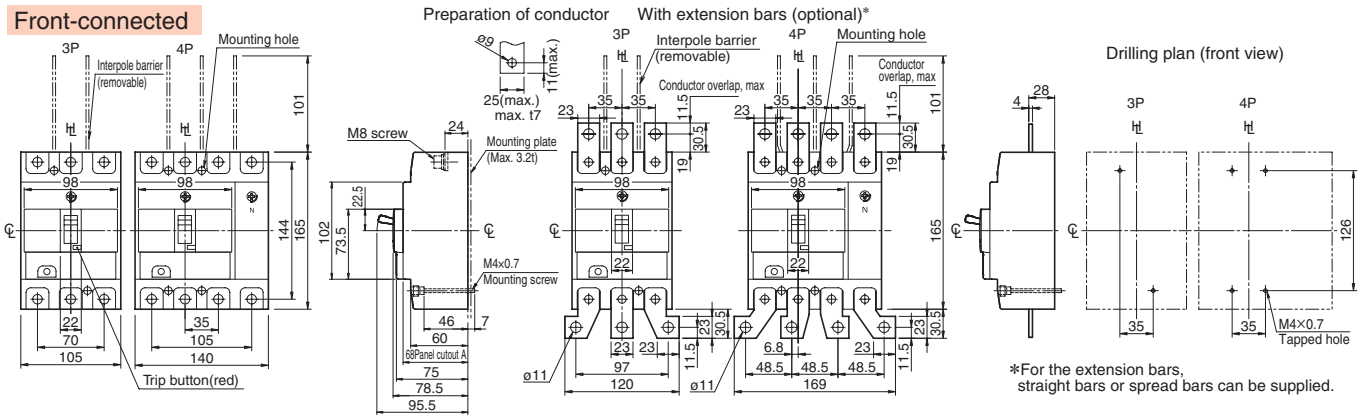

*For the extension bars, straight bars or spread bars can be supplied.

Panel cutout A (front view)

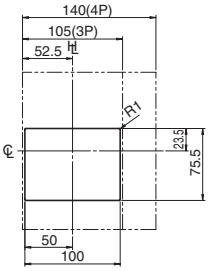

Panel cutout dimensions shown give an allowance of 1.0mm around the handle escutcheon.

Outline dimensions (mm) PS400-NE/GE, PH400-CE

Front-connected

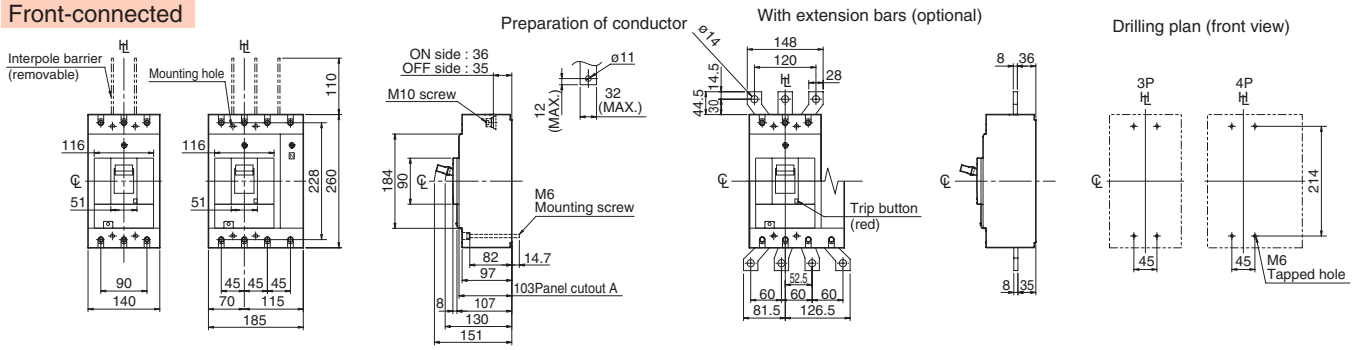

Panel cutout A (front view)

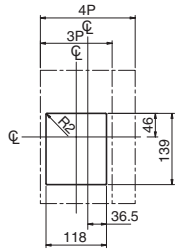

Panel cutout dimensions shown give an allowance of 1.0mm around the handle escutcheon.

Outline dimensions (mm) PS630-NE/GE, PH630-CE

Front-connected

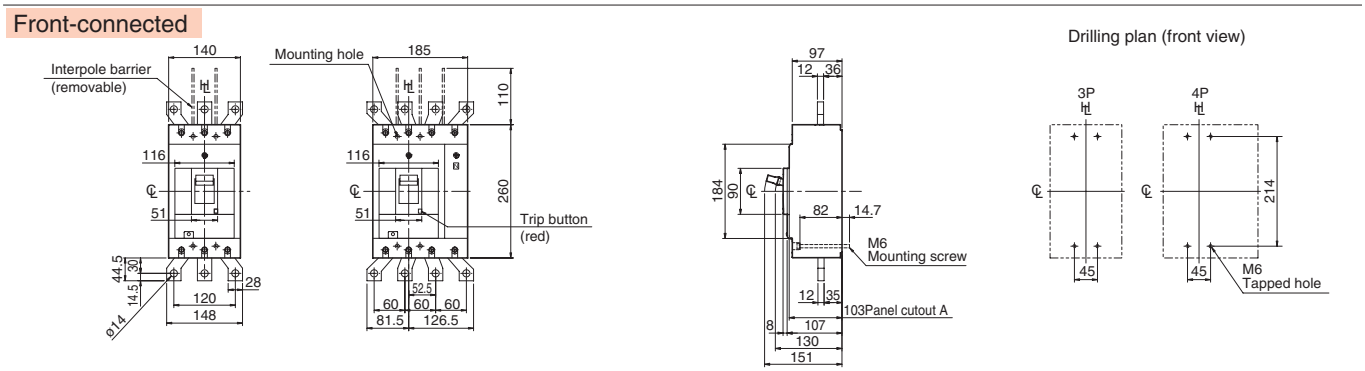

Panel cutout A (front view)

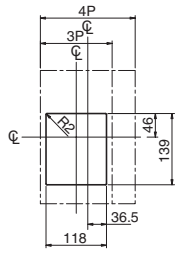

Panel cutout dimensions shown give an allowance of 1.0mm around the handle escutcheon.

High-Performance Electronic Circuit Breaker (XOW type OCR)

Outline dimensions (mm) — H400-NE, L400-NE

Front-connected

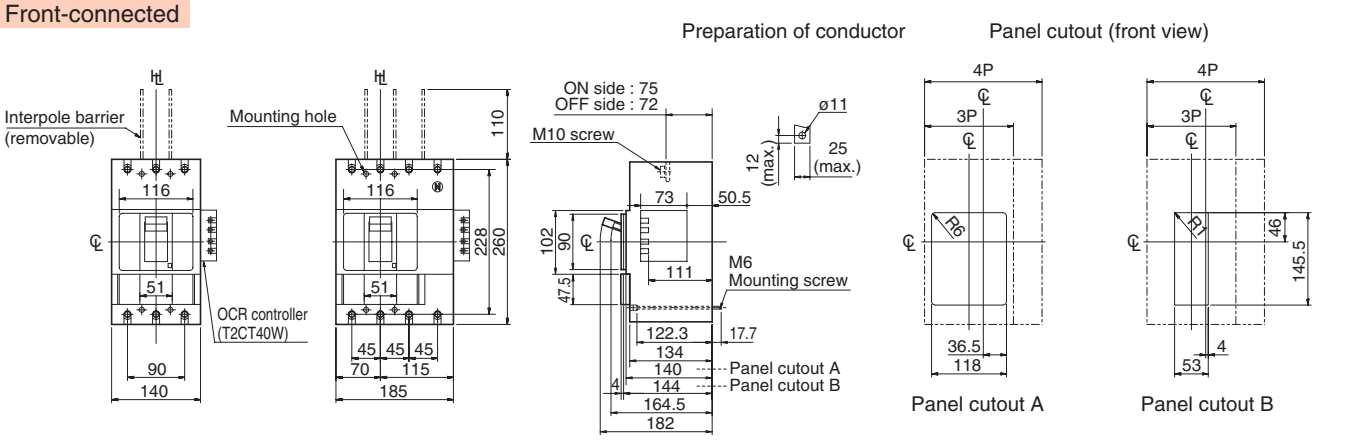

Panel cutout dimensions shown give an allowance of 1.0mm around the handle escutcheon.

Outline dimensions (mm) — S630-NE

Front-connected

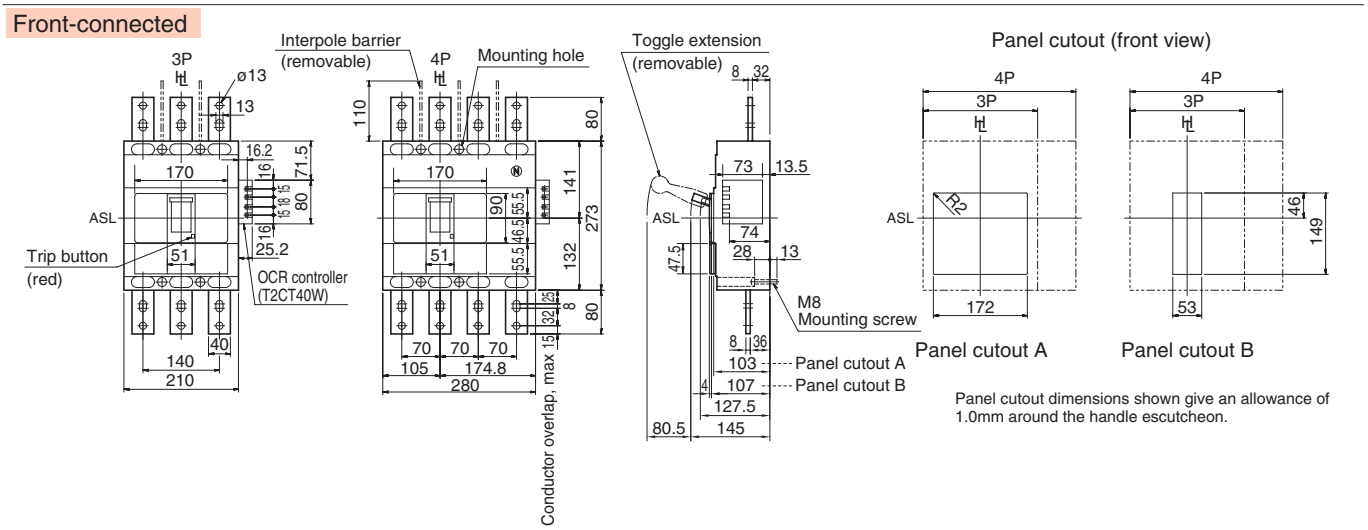

Panel cutout dimensions shown give an allowance of 1.0mm around the handle escutcheon.

Outline dimensions (mm) — H630-NE, L630-NE

Front-connected

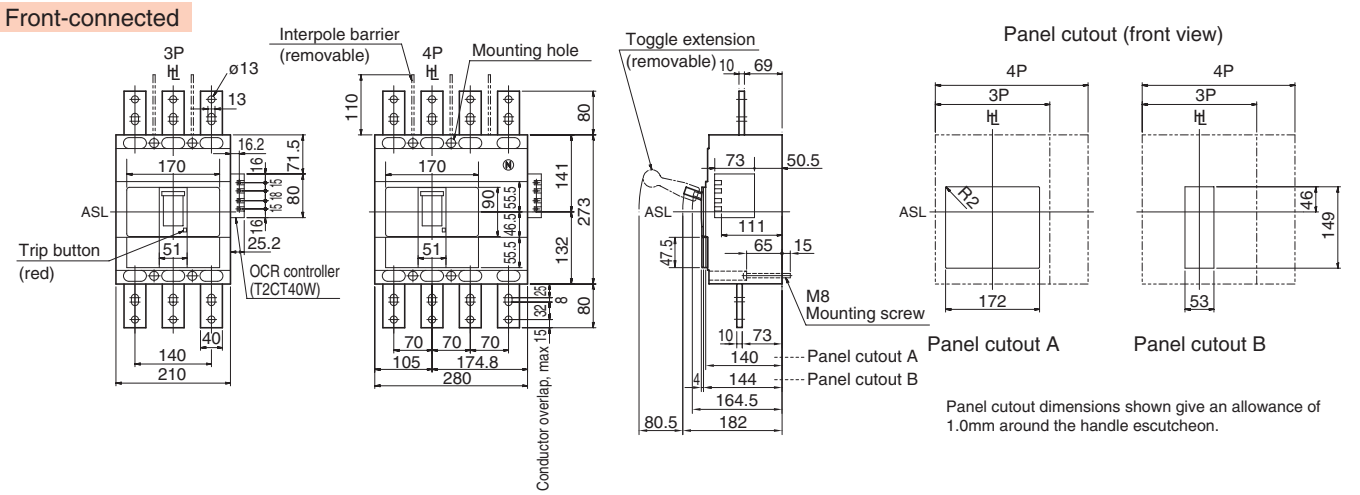

Panel cutout dimensions shown give an allowance of 1.0mm around the handle escutcheon.

Note: All high-performance electronic circuit breakers are supplied with an OCR controller. The panel cutout differs from the standard type electronic circuit breaker. For other than front-connected connections, see the standard type outline dimension drawing.

Outline dimensions (mm) S800-NE

Front-connected

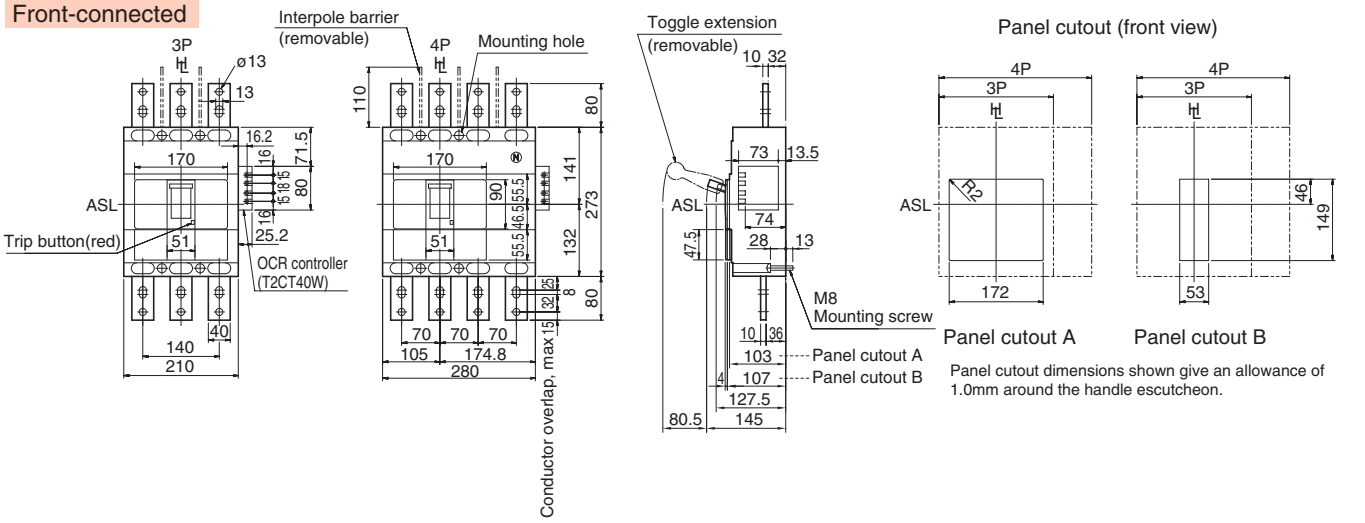

Outline dimensions (mm) H800-NE, L800-NE

Front-connected

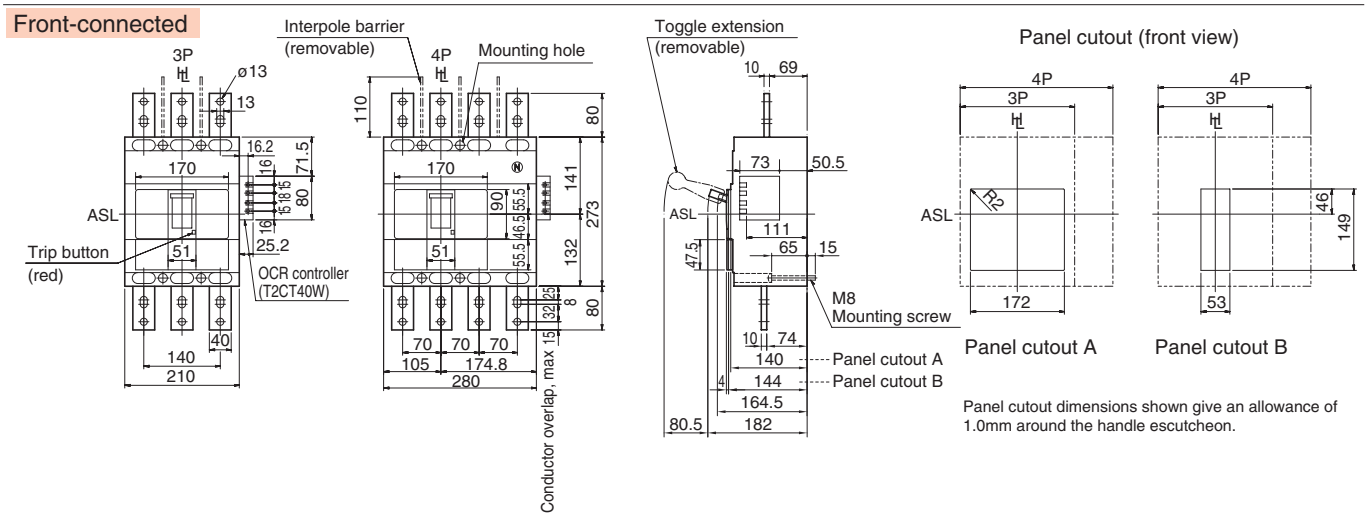

Outline dimensions (mm) S1000-CE

Front-connected

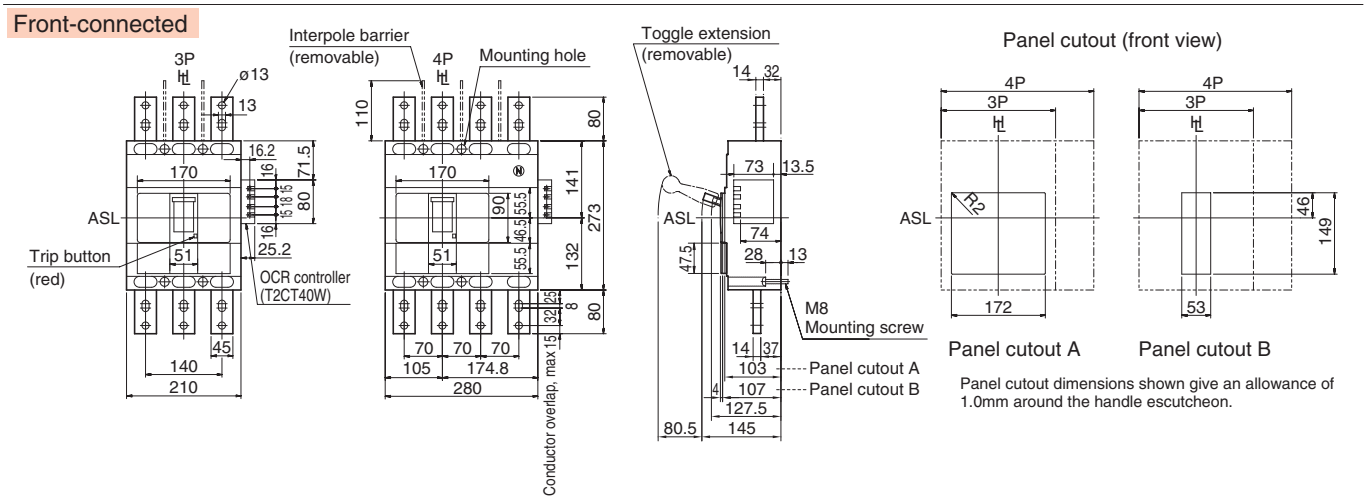

Note: All high-performance electronic circuit breakers are supplied with an OCR controller. The panel cutout differs from the standard type electronic circuit breaker. For other than front-connected connections, see the standard type outline dimension drawing.

7 Characteristics and Outline Dimensions TemBreak PRO

Special Breakers

690V AC Circuit Breaker

Ratings and Specifications

Type	L125-PF			
Number of poles	3			
■ Ratings				
Rated current, A	15 60			
Calibrated at 45°C	20 75			
	30 100			
	40 125			
	50			
Rated insulation voltage〔U_i〕 V	690			
Rated impulse withstand voltage〔U_{imp}〕 kV	8			
■ Rated breaking capacity, kA				
IEC 60947-2 I_{cu}/I_{cs}(sym) AC 690V	70/33			
■ Rated short time withstand current 〔I_{cw}〕 kA	—			
Weight (◉ marked standard type) kg	2.4			
■ Connections and Mountings				
Front-connected (FC) Terminal screws	◉			
With extension bars	○			
Rear-connected (RC) Flat bar studs	○			
Plug-in (PM) For switchboards High-performance (PMB)	○ ㊺			
Standard (PMC)	—			
For distribution boards (PMD)	—			
Flush-mounted (FP) With flat bar studs	—			
Draw-out type (DR)	—			
TemPlug70 (PG)	—			
DIN rail mount	—			
Clip-in chassis mount	—			
■ Accessories (optional) Symbol				
Externally mounted: Motor operator M C	●			
External operating handle: Breaker-mounted H B	●			
Door-mounted (variable depth) H P	●			
Toggle extension H A	—			
Mechanical interlock: Slide type M S	●			
Toggle holder H H	●			
Toggle lock H L	●			
Terminal cover: For front-connected C F	●			
For rear-connected and plug-in C R	● ㊻			
Terminal block for lead T F	●			
Door flange D F	●			
CE marking	Yes			
Overcurrent trip mechanism	Thermal-magnetic			
Colour of cover	Grey Blue			
Trip button (Colour)	Yes (Red)			
Suitability for isolation	Yes			
Reverse connection	Non			

Notes:

◉ : Standard. This configuration used unless otherwise specified.

○ : Optional standard. Specify when ordering. ● : "yes" or "available". — : "no" or "not available".

㊺ : A safety lock function is provided.

㊻ : Terminal covers are provided as standard on the line side and load side.

Time/Current characteristic curves

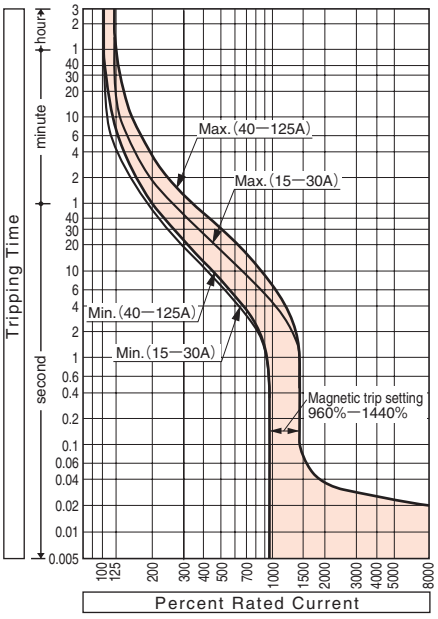

Ambient compensating curves

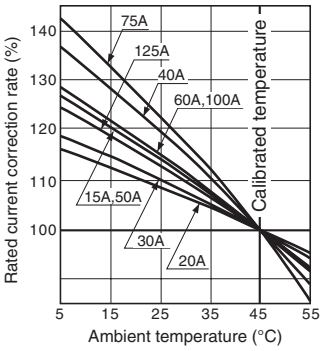

Combinations of Internally Mounted Accessories (Optional)

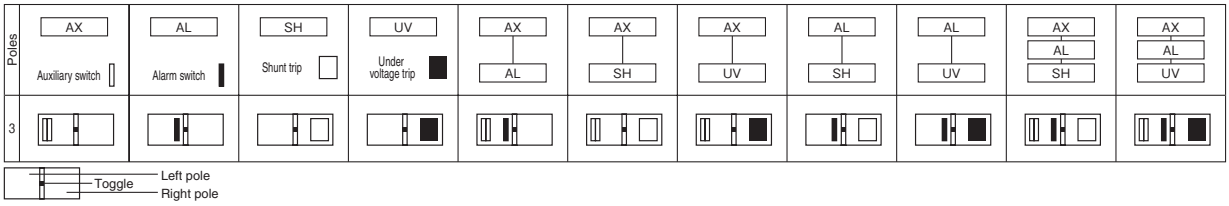

Outline dimensions (mm) L125-PF

Front-connected

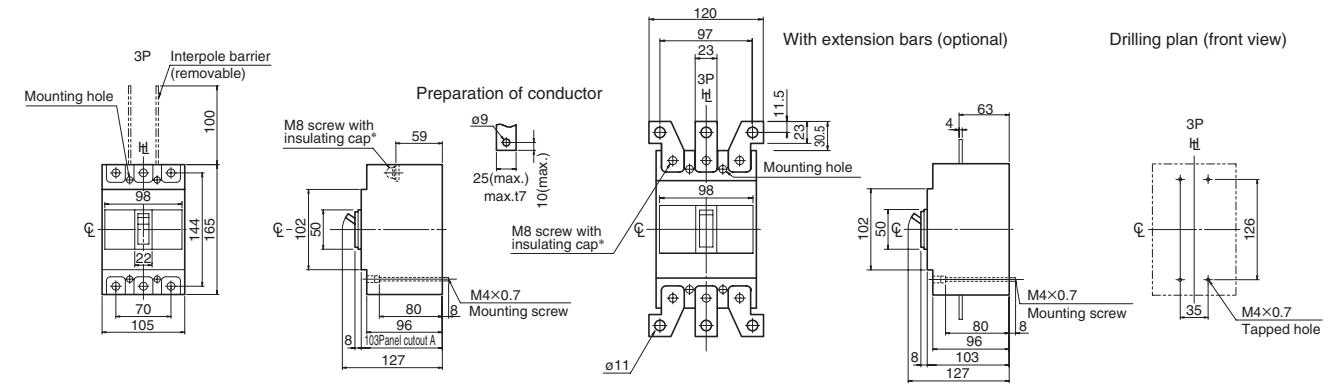

* Be sure to mount the standard equipment insulating cap.

Rear-connected

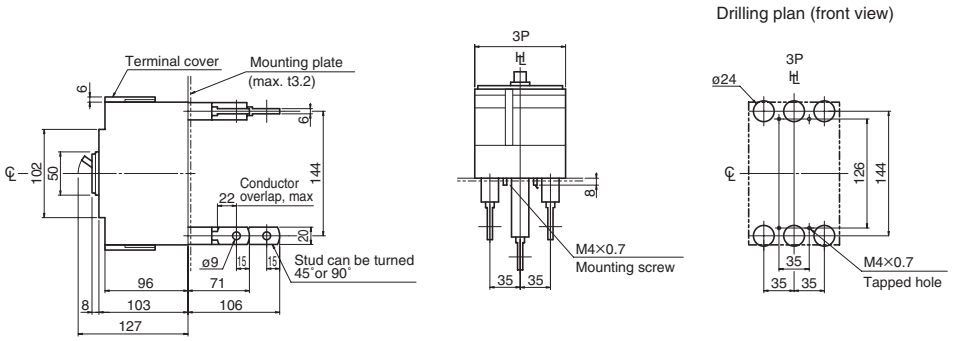

Note: Studs are factory installed in horizontal direction both on the line and load sides.

Panel cutout A (front view)

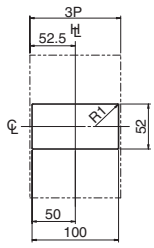

Panel cutout dimensions shown give an allowance of 1.0mm around the handle escutcheon.

Plug-in (High-performance)

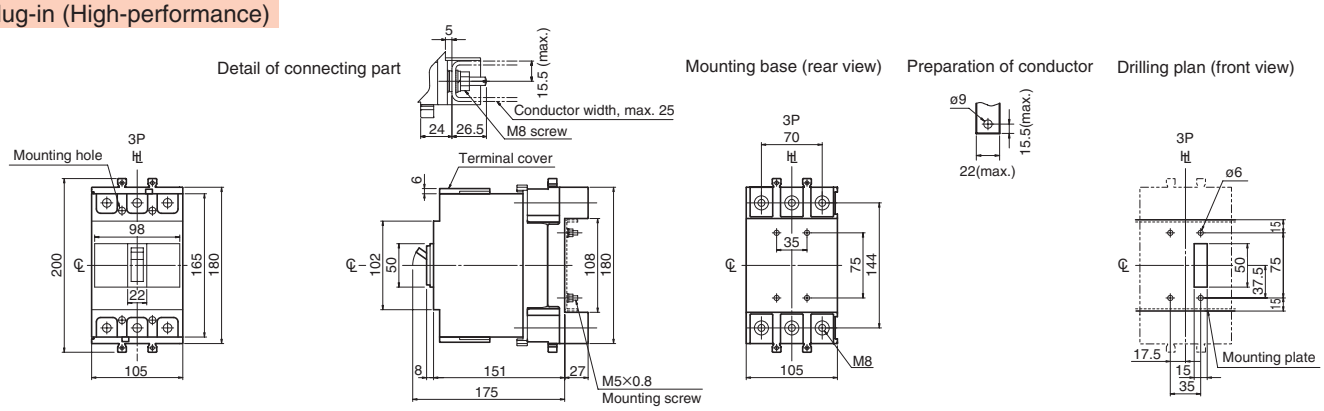

7 Characteristics and Outline Dimensions TemBreak PRO

Special Breakers

690V AC Circuit Breaker

Ratings and Specifications

Type			L400-PE			
Number of poles			3			
■Ratings						
Rated current, A			(Adjustable)	(Adjustable)		
Calibrated at 45°C			125	175		
			150	200		
			175	225		
			200	250		
			225	300		
				350		
				400		
Rated insulation voltage〔U_i〕 V			690			
Rated impulse withstand voltage〔U_{imp}〕 kV			8			
■Rated breaking capacity, kA						
IEC 60947-2 I_{cu}/I_{cs}(sym)	AC	690V	70/50			
■Rated short time withstand current〔I_{cw}〕 kA			5(0.3sec)			
Weight (◉ marked standard type) kg			8.9			
■Connections and Mountings						
Front-connected (FC)	Terminal screws		—			
	With extension bars		—			
Rear-connected (RC)	Flat bar studs		○			
Plug-in (PM) For switchboards	High-performance (PMB)		○ ㊶			
	Standard (PMC)		◉			
For distribution boards (PMD)			—			
Flush-mounted (FP)	With flat bar studs		—			
Draw-out type (DR)			—			
TemPlug70 (PG)			—			
DIN rail mount			—			
Clip-in chassis mount			—			
■Accessories (optional)		Symbol				
Externally mounted: Motor operator		M C	●			
External operating handle	Breaker-mounted	H B	●			
	Door-mounted (variable depth)	H P	●			
Toggle extension		H A	—			
Mechanical interlock	Slide type	M S	●			
Toggle holder		H H	●			
Toggle lock		H L				
Terminal cover	For front-connected	C F	—			
	For rear-connected and plug-in	C R	● ㊻			
Terminal block for lead		T F	●			
Door flange		D F	●			
CE marking			Yes			
Overcurrent trip mechanism			Electronic ⑯			
Colour of cover			Grey Blue			
Trip button (Colour)			Yes (Red)			
Suitability for isolation			Yes			
Reverse connection			Non			

Notes:

◉ : Standard. This configuration used unless otherwise specified.
○ : Optional standard. Specify when ordering. ● : "yes" or "available". — : "no" or "not available".
⑯ : Optional preferential alarm or ground fault trip function available on request.
㊶ : A safety lock function is provided.
㊻ : Terminal covers are provided as standard on the line side and load side.

Time/Current characteristic curves

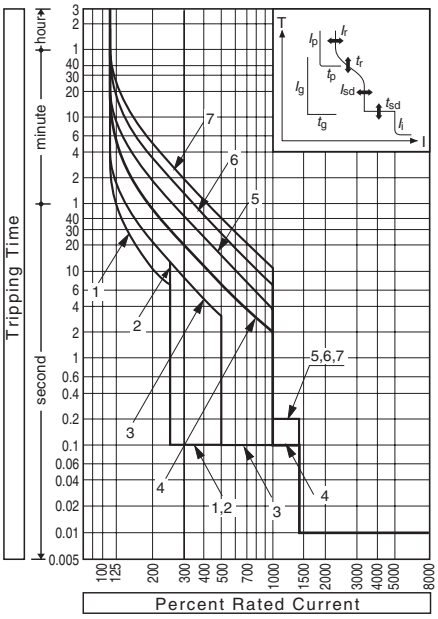

Overcurrent tripping characteristics

Characteristics No.		1	2	3	4	5	6	7
Rated current settings (A) : (I_r)		CT rated current : (I_{CT}) = 250A 125, 150, 175, 200, 225						
		CT rated current : (I_{CT}) = 400A 175, 200, 225, 250, 300, 350, 400						
Long time-delay time settings (s) : (t_r)		11	21	21	5	10	19	29
		at (I_r)×200%			at (I_r)×600%			
		Setting tolerance ±20%						
Short time-delay pick-up current (A) : (I_{sd})	(I_r)×	2.5	2.5	5	10	10	10	10
		Setting tolerance ±15%						
Short time-delay time settings (s) : (t_{sd})		0.1	0.1	0.1	0.1	0.2	0.2	0.2
		Total clearing time +50ms, resettable time –20ms						
Instantaneous trip pick-up current (A) : (I_i)		(I_r)×1400% Max. (I_{CT})×1300% Setting tolerance ±20%						
Option: Preferential trip alarm	Pick-up current (A) : (I_p)	(I_r)×80% Setting tolerance ±10%						
	Time settings (s) : (t_p)	Definite time-delay characteristic, 40sec. Setting tolerance ±10%						
Ground falut trip	Pick-up current (A) : (I_g)	(I_{CT})×20% Setting tolerance ±15% ①						
	Time settings (s) : (t_g)	Definite time-delay characteristic, 0.2sec. Total tripping time +50ms, resettable time –20ms.						
Neutral protection	Pick-up current (A) : (I_N)	(I_r)×100% or 50% selectable ②						
	Time settings (s) : (t_N)	(t_N)=(t_r) Same as Long time-delay time settings						

Note ① : When (I_{CT})=250A, ground fault trip cannot be used.
Note ② : When (I_r) < (I_{CT}), the pick-up current tolerance becomes large when (I_N)=(I_r) × 50% is set.
Remark: Characteristic No.4 will be applied as standard setting unless otherwise specified.

Combinations of Internally Mounted Accessories (Optional)

Poles	AX	AL	SH	UV	AX / AL	AX / SH	AX / UV	AL / SH	AL / UV	AX / AL / SH	AX / AL / UV
	Auxiliary switch	Alarm switch	Shunt trip	Under voltage trip							
3											

Toggle — Left pole / Right pole

Outline dimensions (mm) L400-PE

Rear-connected

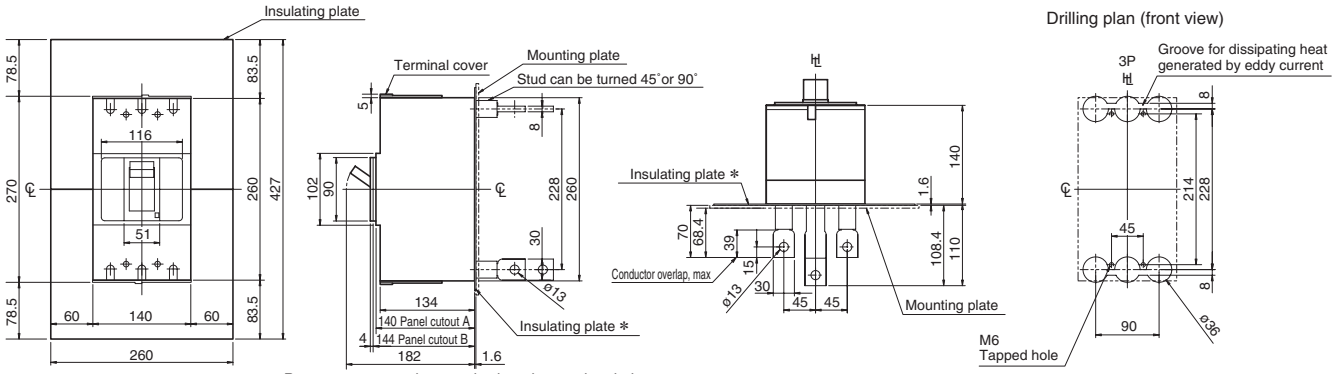

∗ Be sure to mount the standard equipment insulating cap.
Note: Studs are factory installed in horizontal direction both on the line and load sides.

Plug-in (Standard)

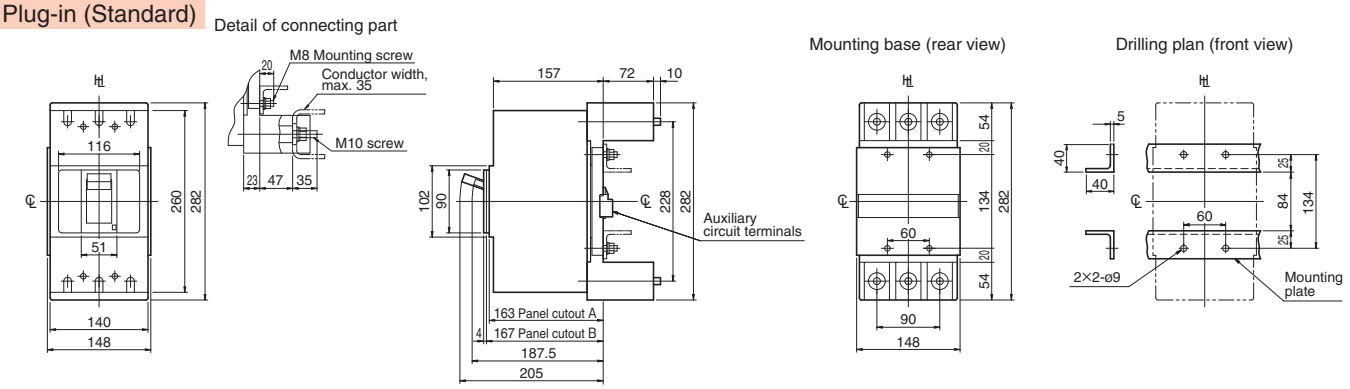

Plug-in (High-performance)

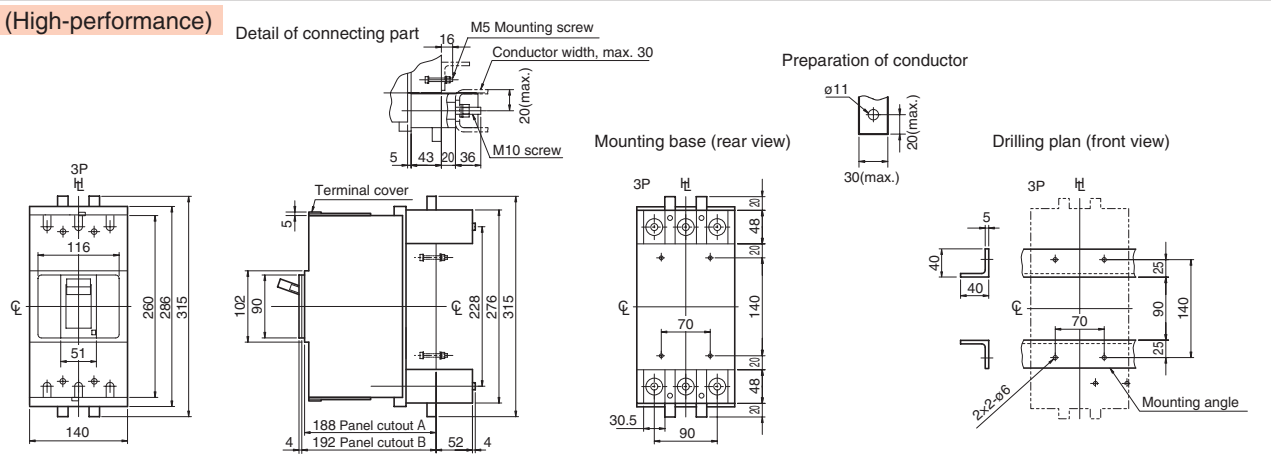

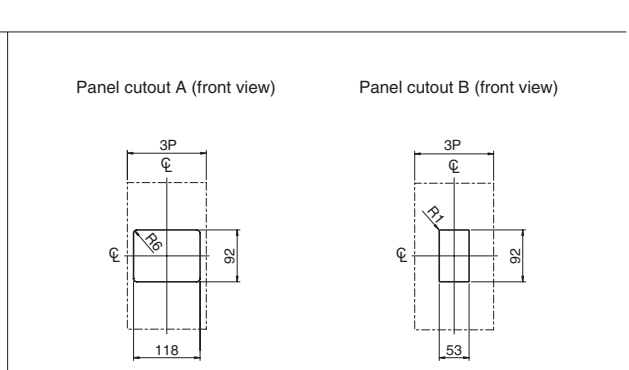

Panel cutout dimensions shown give an allowance of 1.0mm around the handle escutcheon.

7 Characteristics and Outline Dimensions TemBreak PRO

Special Breakers

690V AC Circuit Breaker

Ratings and Specifications

Type			L800-PE				
Number of poles			3				
■Ratings							
Rated current, A			(Adjustable)				
Calibrated at 45°C			350 600 400 700 450 800 500				
Rated insulation voltage〔U_i〕 V			690				
Rated impulse withstand voltage〔U_{imp}〕 kV			8				
■Rated breaking capacity, kA							
IEC 60947-2 I_{cu}/I_{cs}(sym)	AC	690V	70/50				
■Rated short time withstand current 〔I_{cw}〕 kA			10(0.3sec)				
Weight (◉ marked standard type) kg			15.6				
■Connections and Mountings							
Front-connected (FC)	Terminal screws		—				
	With extension bars		—				
Rear-connected (RC)	Flat bar studs		○				
Plug-in (PM) For switchboards	High-performance (PMB)		○ ㊺				
	Standard (PMC)		◉				
For distribution boards (PMD)			—				
Flush-mounted (FP)	With flat bar studs		—				
Draw-out type (DR)			—				
TemPlug70 (PG)			—				
DIN rail mount			—				
Clip-in chassis mount			—				
■Accessories (optional)		Symbol					
Externally mounted: Motor operator		M C	●				
External operating handle	Breaker-mounted	H B	●				
	Door-mounted (variable depth)	H P	●				
Toggle extension		H A	●				
Mechanical interlock	Slide type	M S	●				
Toggle holder		H H	●				
Toggle lock		H L					
Terminal cover	For front-connected	C F	—				
	For rear-connected and plug-in	C R	● ㊻				
Terminal block for lead		T F	●				
Door flange		D F	●				
CE marking			Yes				
Overcurrent trip mechanism			Electronic ⑯				
Colour of cover			Grey Blue				
Trip button (Colour)			Yes (Red)				
Suitability for isolation			Yes				
Reverse connection			Non				

Notes:

◉ : Standard. This configuration used unless otherwise specified.

○ : Optional standard. Specify when ordering. ● : "yes" or "available". — : "no" or "not available".

⑯ : Optional preferential alarm or ground fault trip function available on request.

㊺ : A safety lock function is provided.

㊻ : Terminal covers are provided as standard on the line side and load side.

Time/Current characteristic curves

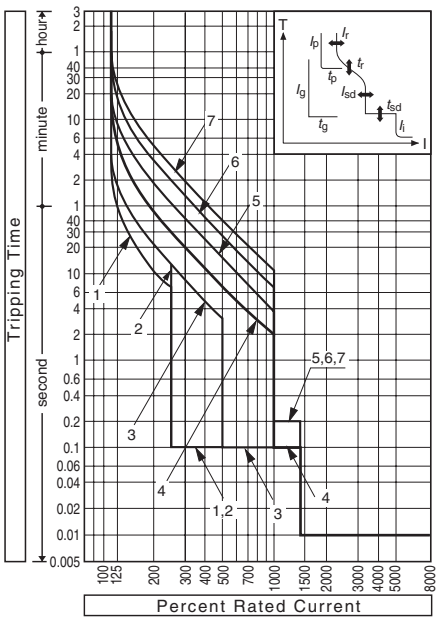

Overcurrent tripping characteristics

Characteristics No.		1	2	3	4	5	6	7
Rated current settings (A) : (I_r)		CT rated current : (I_{CT}) = 800A 350, 400, 450, 500, 600, 700, 800						
Long time-delay time settings (s) : (t_r)		11	21	21	5	10	19	29
		at (I_r)×200%			at (I_r)×600%			
		Setting tolerance ±20%						
Short time-delay pick-up current (A) : (I_{sd})	(I_r)×	2.5	2.5	5	10	10	10	10
		Setting tolerance ±15%						
Short time-delay time settings (s) : (t_{sd})		0.1	0.1	0.1	0.1	0.2	0.2	0.2
		Total clearing time +50ms, resettable time –20ms						
Instantaneous trip pick-up current (A) : (I_i)		(I_r)×1400% Max. (I_{CT})×1200% Setting tolerance ±20%						
Option: Preferential trip alarm	Pick-up current (A) : (I_p)	(I_r)×80% Setting tolerance ±10%						
	Time settings (s) : (t_p)	Definite time-delay characteristic, 40sec. Setting tolerance ±10%						
Ground falut trip	Pick-up current (A) : (I_g)	(I_{CT})×20% Setting tolerance ±15%						
	Time settings (s) : (t_g)	Definite time-delay characteristic, 0.2sec. Total tripping time +50ms, resettable time –20ms.						
Neutral protection	Pick-up current (A) : (I_N)	(I_r)×100% or 50% selectable ②						
	Time settings (s) : (t_N)	(t_N)=(t_r) Same as Long time-delay time settings						

Remark: Characteristic No.4 will be applied as standard setting unless otherwise specified.

Note ② : When (I_r) < (I_{CT}), the pick-up current tolerance becomes large when (I_N)=(I_r) × 50% is set.

Combinations of Internally Mounted Accessories (Optional)

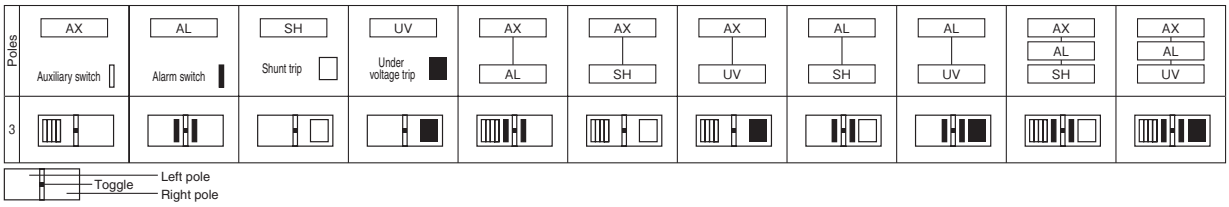

Outline dimensions (mm) L800-PE

Rear-connected

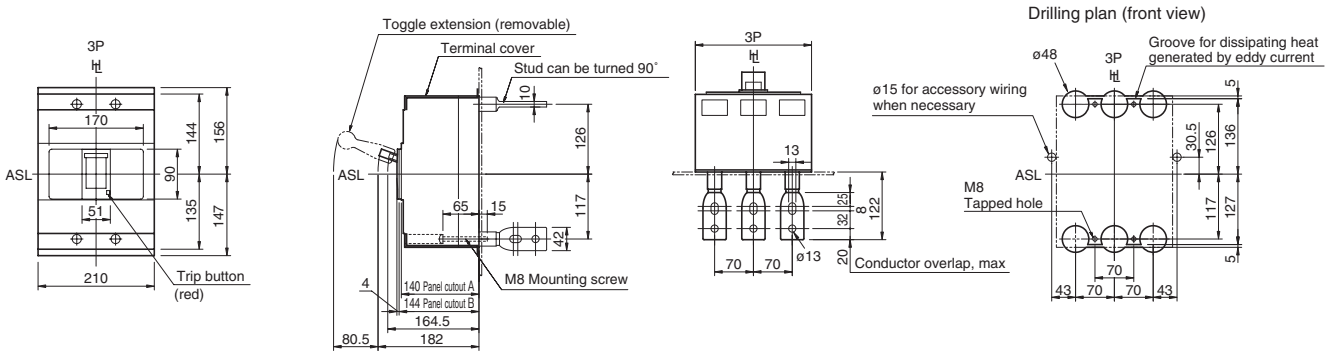

Note: Studs are factory installed in horizontal direction both on the line and load sides.

Plug-in (Standard)

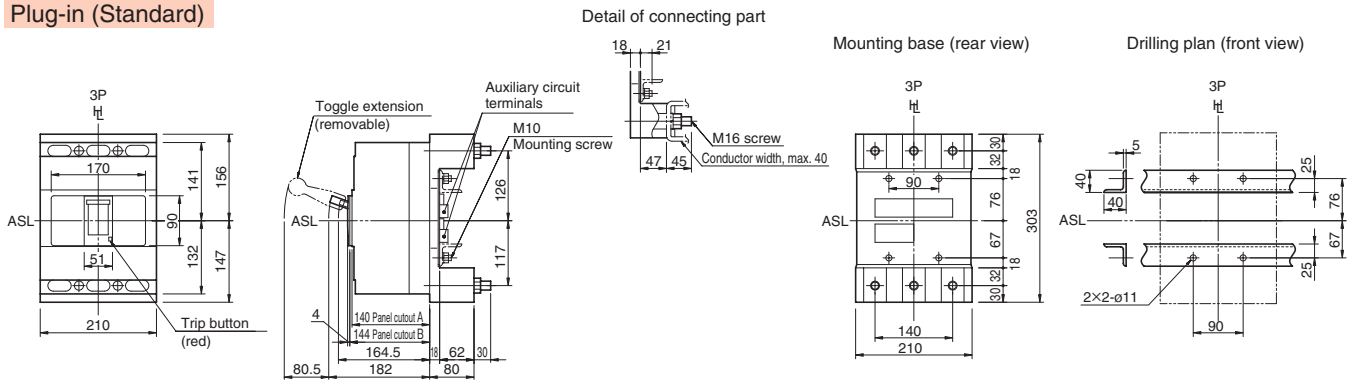

Plug-in (High-performance)

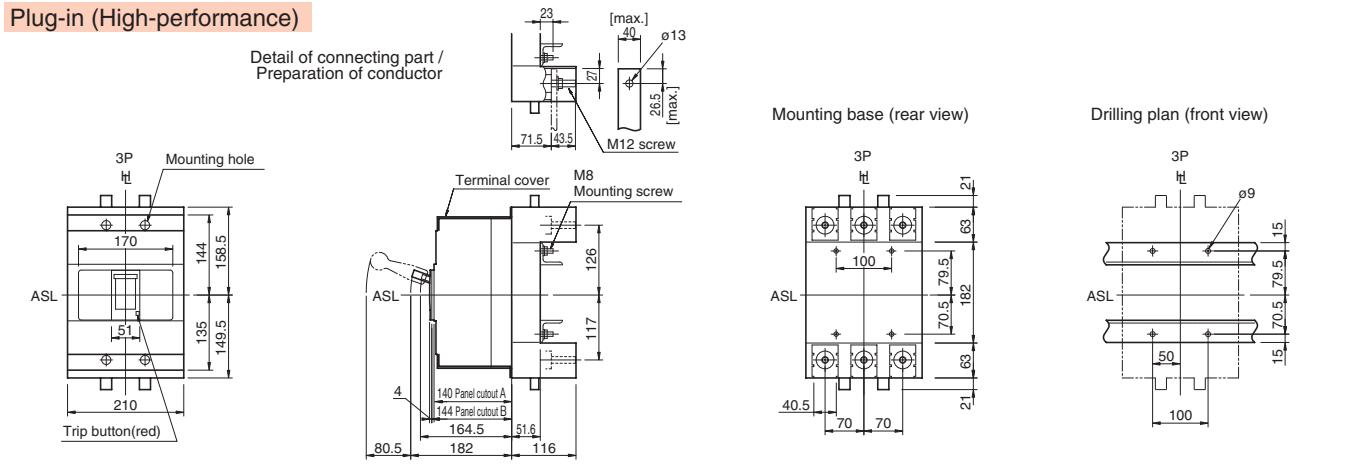

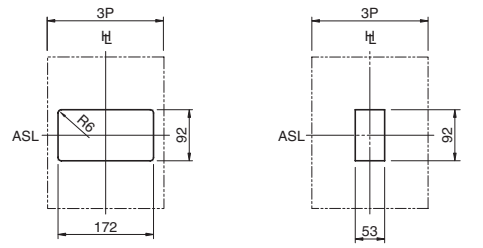

Panel cutout dimensions shown give an allowance of 1.0mm around the handle escutcheon.

Ratings and Specifications

Frame size (A)			400
Type			**E400-SF**
Number of poles			3
■ Ratings			
Rated current, A			250
Calibrated at 40° C			300
			350
			400
Rated insulation voltage〔U_i〕 V			690
Rated impulse withstand voltage〔U_{imp}〕 kV			8
Rated short time withstand current 〔I_{cw}〕 kA			—
Utilization Category			A
■ Rated breaking capacity, kA			
JIS C 8201-2-1 Ann.1 Ann.2	AC	690V	—
IEC 60947-2		500V	15/15
I_{cu}/I_{cs}(sym)		440V	25/22
		415V	36/25
		380V	36/25
		240V	50/35
	① DC	250V	25/19
		125V	40/30
NK	AC	690V	—
I_{cu}/I_{cs}(sym)		450V	—
		240V	—
	① DC	250V	—
Weight (◉ marked standard type) kg			4.1
■ Connections and Mountings			
Front-connected (FC)	Terminal screws		◉
	With extension bars		○
Rear-connected (RC)	Flat bar studs		○
Plug-in (PM) For switchboards	High-performance (PMB)		—
	Standard (PMC)		—
For distribution boards (PMD)			—
Flush-mounted (FP)	With flat bar studs		○
Draw-out type (DR)			—
TemPlug70 (PG)			—
DIN rail mount			—
■ Accessories (optional)		**Symbol**	
Externally mounted: Motor operator		M C	—
External operating handle	Breaker-mounted	H B	●
	Door-mounted (variable depth)	H P	—
Toggle extension		H A	●
Mechanical interlock	Slide type	M S	●
	Rear-connected type	M B	—
	Link type	M L	—
	Wire type	M W	—
Toggle holder		H H	●
Toggle lock		H L	
Terminal cover	For front-connected	C F	●
	For rear-connected and plug-in	C R	●
Terminal block for lead		T F	●
Door flange		D F	●
CE marking			Yes
Overcurrent trip mechanism			Thermal-magnetic
Colour of cover			Grey Blue
Trip button (Colour)			Yes (Red)
Suitability for isolation			Yes
Reverse connection			Yes

Notes:
◉ : Standard. This configuration used unless otherwise specified.
○ : Optional standard. Specify when ordering. ● : "yes" or "available". — : "no" or "not available".
① : DC is a special specification. When ordering, please specify DC.

Time/Current characteristic curves

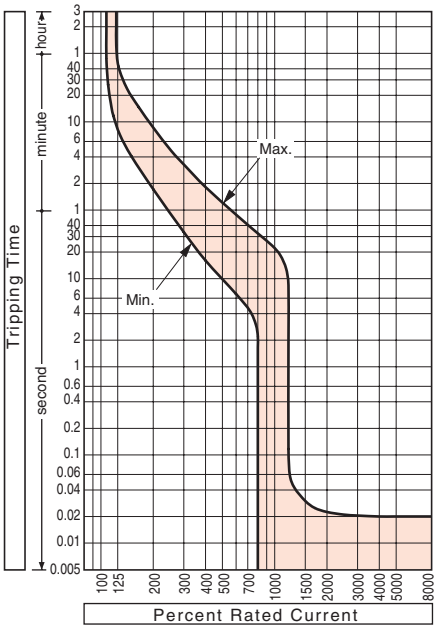

Ambient compensating curves

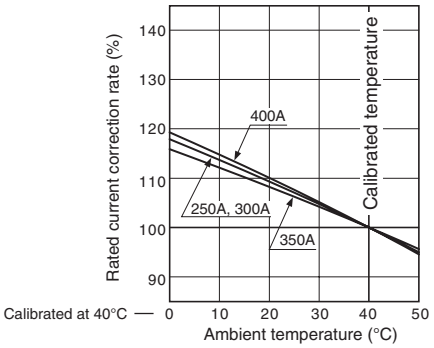

Magnetic trip pick-up current

Rated current (A)	Magnetic trip pick-up current (adjustable range) (A) $I_n \times$ 10
250	2500
300	3000
350	3500
400	4000

Note (1) : Setting tolerance: ±20%.

Combinations of Internally Mounted Accessories (Optional)

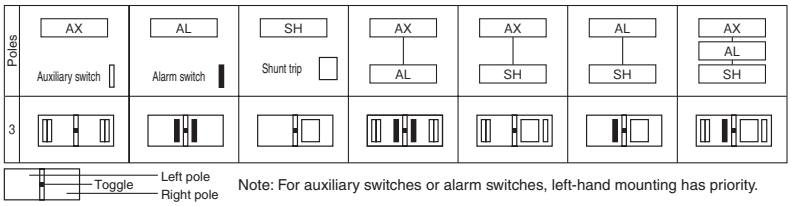

Note: For auxiliary switches or alarm switches, left-hand mounting has priority.

Outline dimensions (mm) E400-SF

Front-connected

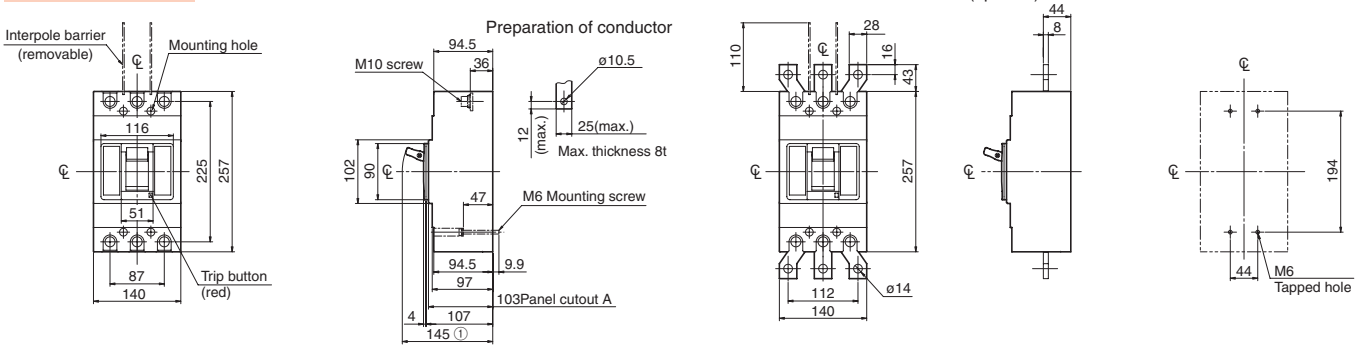

Rear-connected

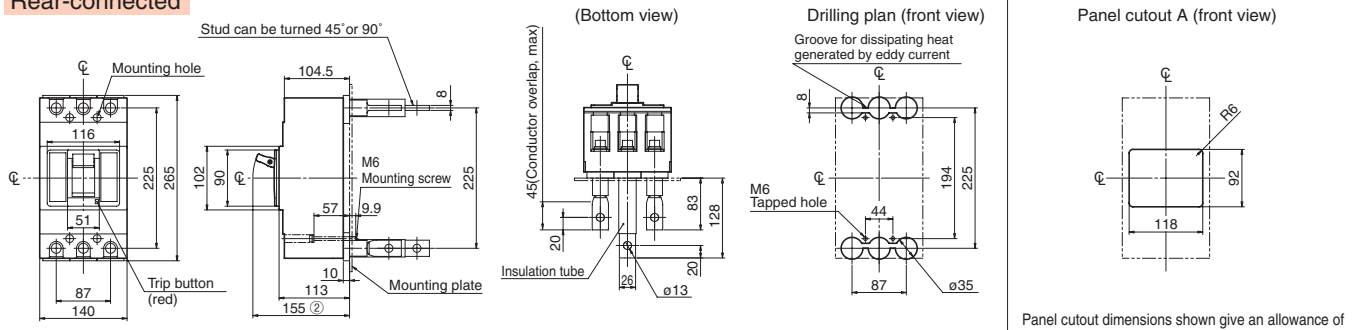

Note: Studs are factory installed in horizontal direction both on the line and load sides.

Panel cutout dimensions shown give an allowance of 1.0mm around the handle escutcheon.

Flush-mounted

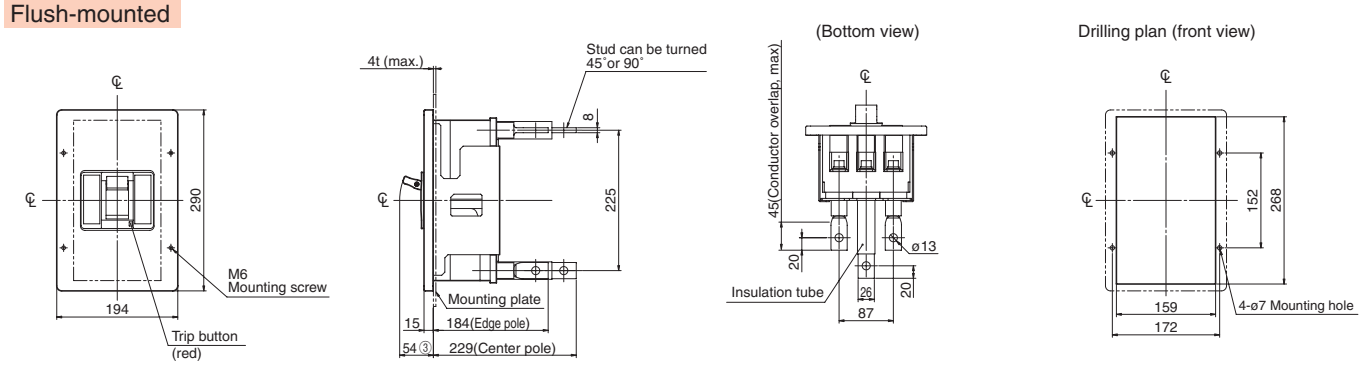

Note: Studs are factory installed in horizontal direction both on the line and load sides.

Notes ① : 134mm can also be used. However, the toggle extension cannot be used.
② : 144mm can also be used. However, the toggle extension cannot be used.
③ : 43mm can also be used. However, the toggle extension cannot be used.

Special Breakers

Circuit Breaker with earth leakage alarm

Ratings and Specifications

Frame size (A)			400
Type			ZAE400-SF
Number of poles			3
■ Ratings			
Rated current, A			250
Calibrated at 40°C			300
			350
			400
Rated insulation voltage AC V			100-440 common
Operable voltage fluctuation range V			80—484
Rated impulse withstand voltage〔U_{imp}〕 kV			8
■ Rated breaking capacity, kA			
JIS C 8201-2-1 Ann.2	AC	440V	25
I_{cu}(sym)		415V	36
		240V	50
■ Earth leakage alarm specifications			
Earth leakage detection (Current operation type)			Electronic
Rated sensitivity current mA		Instantaneous tripping type	—
		Time delay type	100/200/500 selectable
Max. operating time sec		Instantaneous tripping type	—
		Time delay type	0.1/0.45/1.0 selectable
Earth leakage alarm output contact configuration			1c
Alarm reset function (manual reset) ㊴			Push button ⑧
Weight (◉ marked standard type) kg			4.7
■ Connections and Mountings			
Front-connected (FC)	Terminal screws		◉
	With extension bars		○
Rear-connected (RC)	Flat bar studs		○
Plug-in (PM) For switchboards	High-performance (PMB)		—
	Standard (PMC)		—
For distribution boards (PMD)			—
Flush-mounted (FP)	With flat bar studs		○
Draw-out type (DR)			—
TemPlug70 (PG)			—
DIN rail mount			—
■ Accessories (optional)		Symbol	
Externally mounted: Motor operator		M C	—
External operating handle	Breaker-mounted	H B	●
	Door-mounted (variable depth)	H P	—
Toggle extension		H A	●
Mechanical interlock	Slide type	M S	●
	Rear-connected type	M B	—
	Link type	M L	—
	Wire type	MW	—
Toggle holder		H H	●
Toggle lock		H L	
Terminal cover	For front-connected	C F	●
	For rear-connected and plug-in	C R	●
Terminal block for lead		T F	●
Door flange		D F	—
CE marking			Non
Overcurrent trip mechanism			Thermal-magnetic
Earth leakage indication			Red LED
Colour of cover			Grey Blue
Trip button (Colour)			Yes (Red)
Suitability for isolation			Yes
Reverse connection			Yes

Notes:

◉ : Standard. This configuration used unless otherwise specified.
○ : Optional standard. Specify when ordering. ● : "yes" or "available". — : "no" or "not available".
⑧ : Optional remote reset or automatic reset available on request. Please apply this when the reset button cannot be pressed due to the installation of external accessories, etc. See page 6-27 for details.
⑭ : When applying 3-pole type to a 1ø2W circuit, use both ends and do not use the central pole.
⑮ : When applying 3-pole type to a 1ø3W circuit, apply voltage to both ends and connect the neutral wire to the central pole.
㊴ : An earth leakage alarm maintains the operating state until pressing the reset button or turning the main circuit power OFF. If the electric leakage continues, it will be reset while you hold down the reset button, but when you release the reset button, it will return to the operating state.

Remark: The rated sensitivity current is set to 100mA and the time delay tripping type's operating time is set to 0.45 seconds before delivery.

Combinations of Internally Mounted Accessories (Optional)

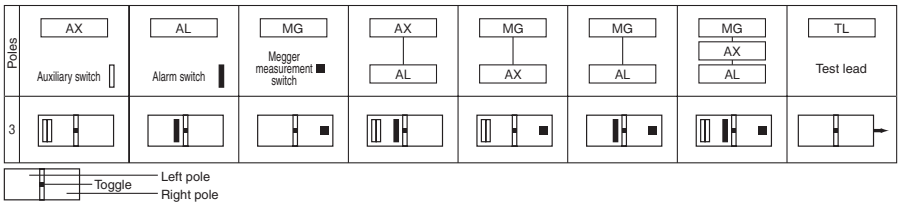

Time/Current characteristic curves

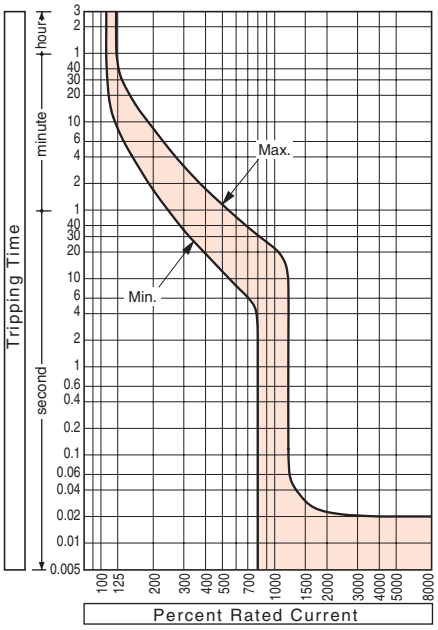

Ambient compensating curves

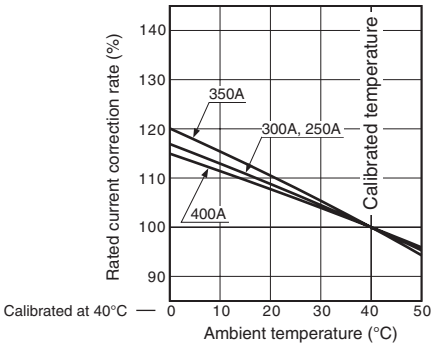

Magnetic trip pick-up current

Rated current (A)	Magnetic trip pick-up current (adjustable range) (A) $I_n \times 10$
250	2500
300	3000
350	3500
400	4000

Note (1) : Setting tolerance: ±20%.

Earth leakage trip characteristic

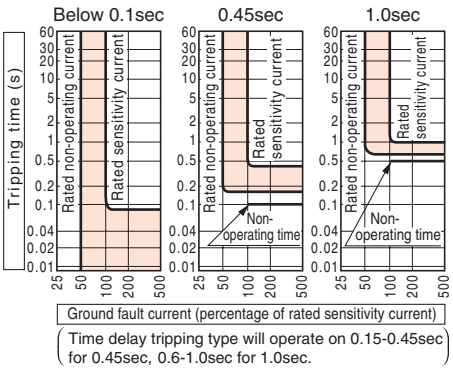

Time delay tripping type will operate on 0.15-0.45sec for 0.45sec, 0.6-1.0sec for 1.0sec.

Outline dimensions (mm) ZAE400-SF

Front-connected

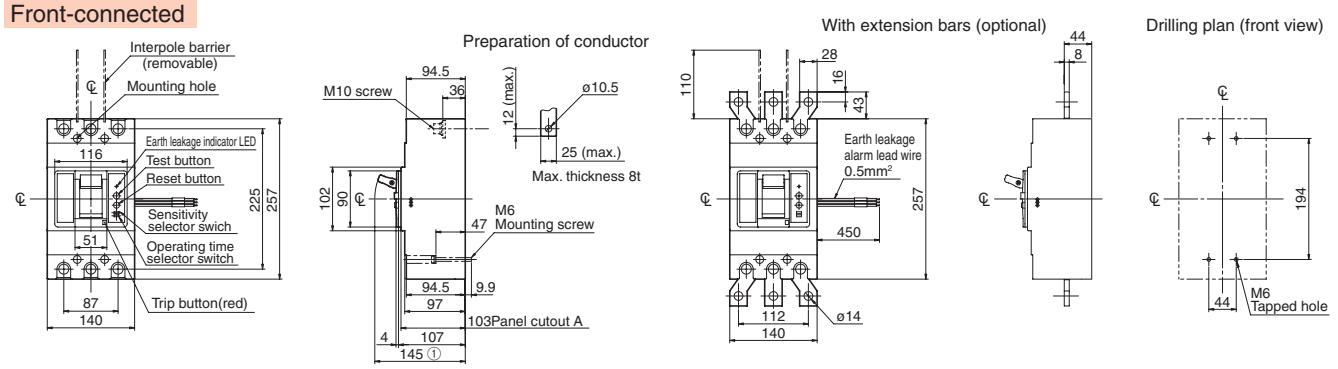

Rear-connected

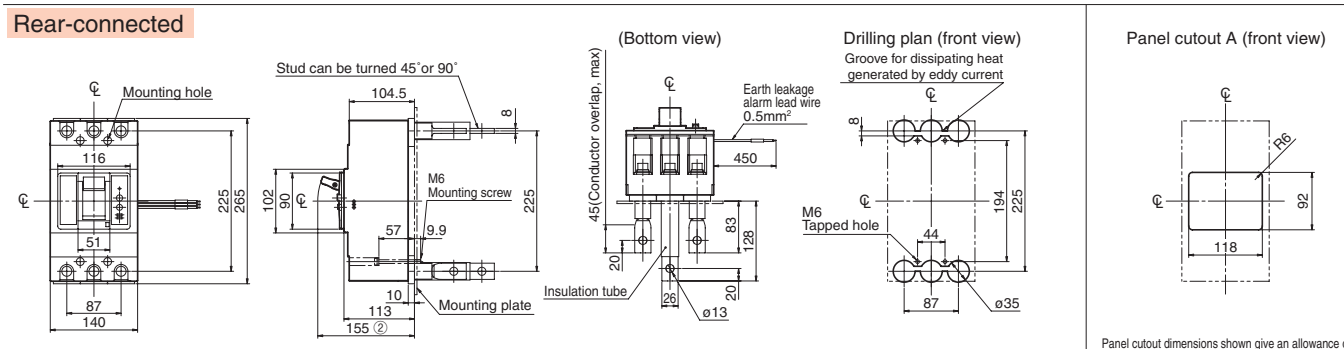

Note: Studs are factory installed in horizontal direction both on the line and load sides.

Panel cutout dimensions shown give an allowance of 1.0mm around the handle escutcheon.

Flush-mounted (For leakage alarm lead wires, see the front-connected type)

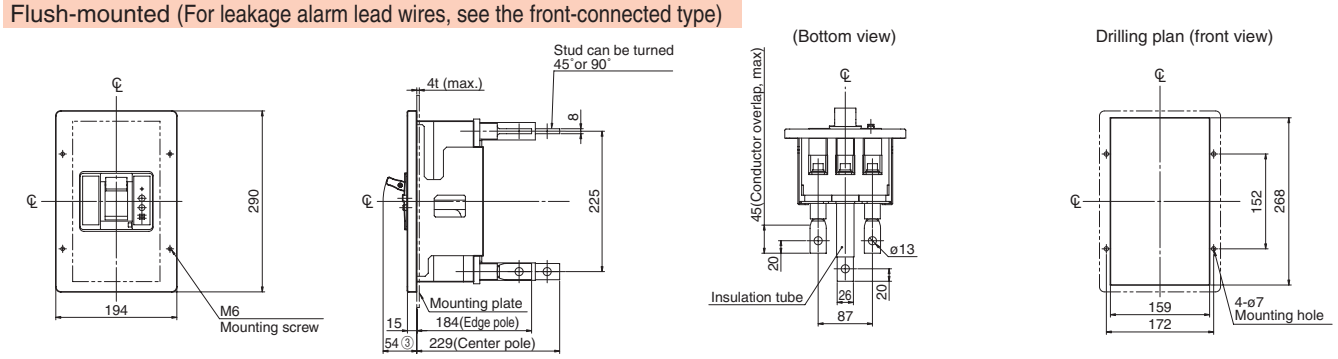

Note: Studs are factory installed in horizontal direction both on the line and load sides.

Notes ① : 134mm can also be used. However, the toggle extension cannot be used.
② : 144mm can also be used. However, the toggle extension cannot be used.
③ : 43mm can also be used. However, the toggle extension cannot be used.

Control circuit

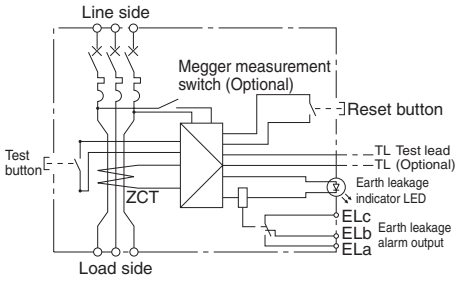

Special Breakers

Single phase 3-wire circuit breakers with neutral phase open protection and earth leakage alarm

Ratings and Specifications

Frame size (A)		400
Type		**NAE400-SF**
Number of poles / Elements		3P3E ⑩
Phase and wires		1ø3W
■ Ratings		
Rated current, A		250
Calibrated at 40°C		300
		350
		400
Rated operational voltage AC V		100/200
Rated impulse withstand voltage〔U_{imp}〕 kV		8
Single 3-phase neutral wire open phase protection characteristics	Rated operating overvoltage AC V	135
	Rated non-operating overvoltage AC V	120
	Rated overvoltage operating time (sec)	1 or less
■ Rated breaking capacity, kA		
JIS C 8201-2-1 Ann.2 I_{cu} (sym) AC 100/200V		50
Weight (◉ marked standard type) kg		4.9
■ Earth leakage alarm specifications		
Earth leakage detection (Current operation type)		Electronic
Rated sensitivity current mA		30/100/500 selectable
		100/200/500 selectable
Max. operating time sec		0.1/0.45/1.0 selectable
Earth leakage alarm output contact configuration		1c
Alarm reset function (manual reset) ㊴		Push button ⑧
Earth leakage indication		Red LED
■ Connections and Mountings		
Front-connected (FC)	Terminal screws	◉
	With extension bars	○

■ Accessories (optional)		Symbol	
Externally mounted	Motor operator	M C	●
	External operating handle: Breaker-mounted	H B	●
	External operating handle: Door-mounted (variable depth)	H P	●
	Toggle extension	H A	●
	Mechanical interlock: Slide type	M S	—
	Mechanical interlock: Link type	M L	—
	Mechanical interlock: Wire type	MW	—
	Toggle holder	H H	●
	Toggle lock	H L	
	Terminal cover For front-connected	C F	●
	Terminal block for lead	T F	●
	Door flange	D F	—
CE marking			Non
Overcurrent trip mechanism			Thermal-magnetic
Colour of cover			Grey Blue
Trip button (Colour)			Yes (Red)
Suitability for isolation			Yes
Reverse power flow circuit			Yes ㉕

Notes:

◉ : Standard. This configuration used unless otherwise specified.

○ : Optional standard. Specify when ordering. ● : "yes" or "available". — : "no" or "not available".

⑧ : Optional remote reset or automatic reset available on request. Please apply this when the reset button cannot be pressed due to the installation of external accessories, etc. See page 6-27 for details.

⑩ : They can also be applied to circuits where overcurrent flows in the neutral wire.

㊴ : An earth leakage alarm maintains the operating state until pressing the reset button or turning the main circuit power OFF. If the electric leakage continues, it will be reset while you hold down the reset button, but when you release the reset button, it will return to the operating state.

㉕ : Since the overvoltage and earth leakage detection circuit has a continuous rating specification, there is no need to turn off the power of the detection circuit using a megger test switch, etc.

Time/Current characteristic curves

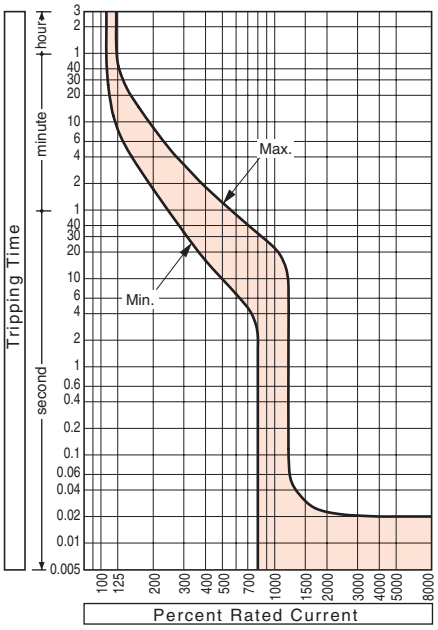

Ambient compensating curves

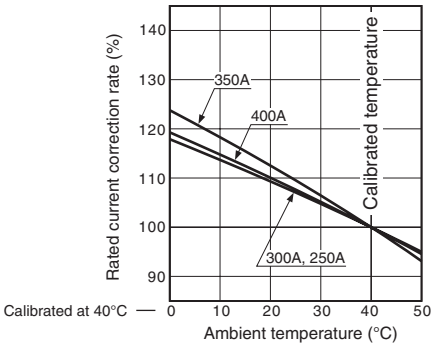

Magnetic trip pick-up current

Rated current (A)	Magnetic trip pick-up current (adjustable range) (A) $I_n \times$ 10
250	2500
300	3000
350	3500
400	4000

Note (1) : Setting tolerance: ±20%.

Earth leakage trip characteristic

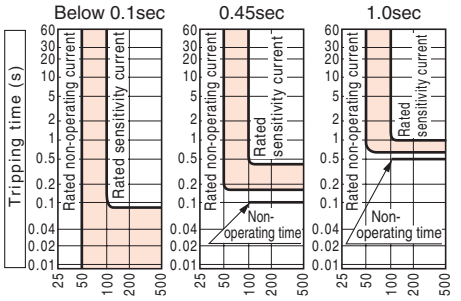

Time delay tripping type will operate on 0.15-0.45sec for 0.45sec, 0.6-1.0sec for 1.0sec.

Combinations of Internally Mounted Accessories (Optional)

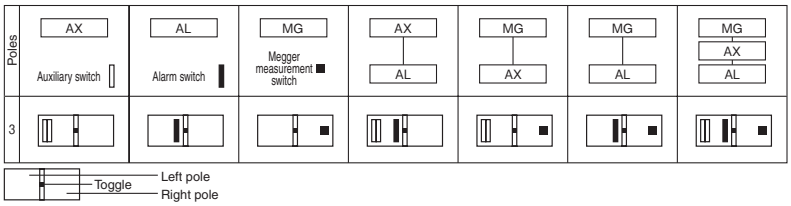

Outline dimensions (mm) NAE400-SF

Front-connected

With extension bars (optional)

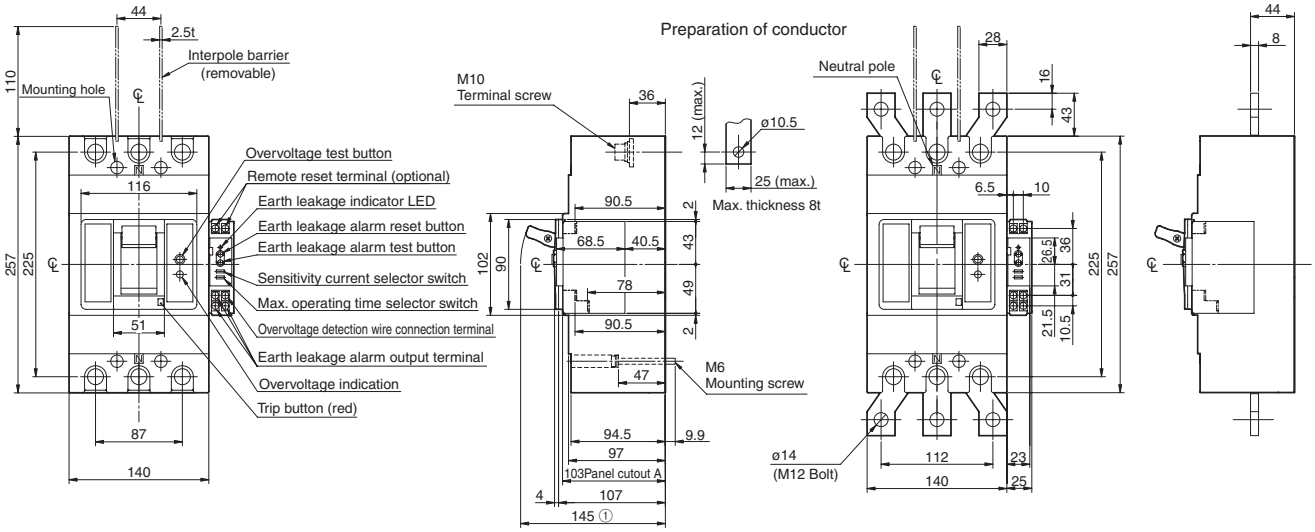

Remarks 1) Side unit terminal screws M3.5
2) Tightening torque of M3.5 terminal screws: 0.9 to 1.2Nm
3) Connectable wire: 2.0mm² (max.)
4) Overvoltage detection terminal block connection length: 30m (max.)

Note ① : 134mm can also be used. However, the toggle extension cannot be used.

Drilling plan (front view)

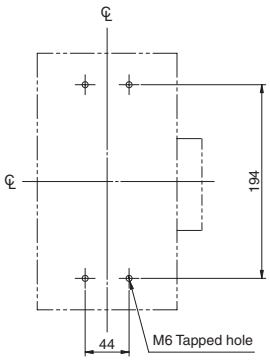

Panel cutout A (front view)

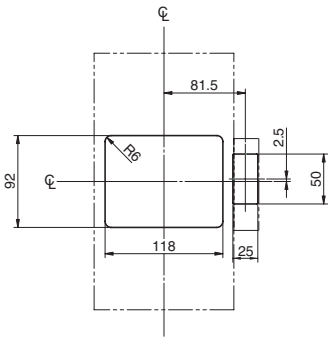

Panel cutout dimensions shown give an allowance of 1.0mm around the handle escutcheon.

Single phase 3-wire circuit breakers with neutral phase open protection characteristics

The operating voltage of the single phase 3-wire circuit breakers with neutral phase open protection is set at more than 120V and less than 135V. If there is an abnormal voltage above 135V due to neutral wire open phase, the circuit breaker will reliably trip within 1 second.

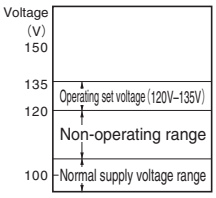

Control circuit

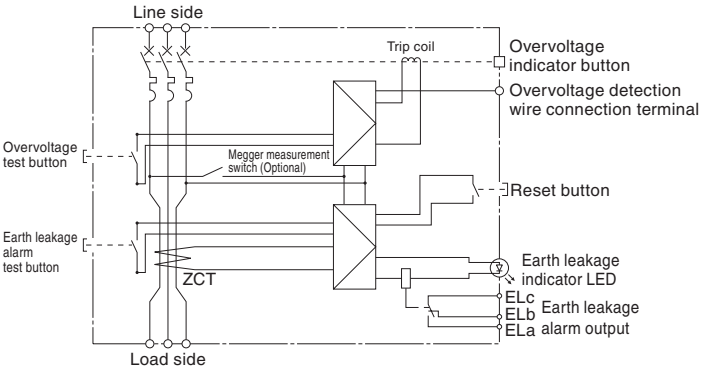

Special Breakers

Single phase 3-wire circuit breakers with neutral phase open protection

Ratings and Specifications

Frame size (A)		400			
Type		NE400-SF			
Number of poles / Elements		3P3E ⑩			
Phase and wires		1ø3W			
■ Ratings					
Rated current, A		250			
Calibrated at 40°C		300			
		350			
		400			
Rated operational voltage AC V		100/200			
Rated impulse withstand voltage〔U_{imp}〕 kV		8			
Single 3-phase neutral wire open phase protection characteristics	Rated operating overvoltage AC V	135			
	Rated non-operating overvoltage AC V	120			
	Rated overvoltage operating time (sec)	1 or less			
■ Rated breaking capacity, kA					
JIS C 8201-2-1 Ann.2 I_{cu} (sym) AC 100/200V		50			
Weight (◉ marked standard type) kg		4.2			
■ Connections and Mountings					
Front-connected (FC)	Terminal screws	◉			
	With extension bars	○			
DIN rail mount		—			
■ Accessories (optional)	Symbol				
Externally mounted: Motor operator	M C	—			
External operating handle: Breaker-mounted	H B	●			
External operating handle: Door-mounted (variable depth)	H P	—			
Toggle extension	H A	●			
Mechanical interlock: Slide type	M S	●			
Mechanical interlock: Link type	M L	—			
Mechanical interlock: Wire type	MW	—			
Toggle holder	H H	●			
Toggle lock	H L				
Terminal cover For front-connected	C F	●			
Terminal block for lead	T F	●			
Door flange	D F	—			
CE marking		Non			
Overcurrent trip mechanism		Thermal-magnetic			
Overvoltage operation indication function		Mechanical button			
Colour of cover		Grey Blue			
Trip button (Colour)		Yes (Red)			
Suitability for isolation		Yes			
Reverse power flow circuit		Yes ⑭			

Notes:

◉ : Standard. This configuration used unless otherwise specified.
○ : Optional standard. Specify when ordering. ● : "yes" or "available". — : "no" or "not available".
⑩ : They can also be applied to circuits where overcurrent flows in the neutral wire.
⑭ : Since the overvoltage detection circuit has a continuous rating specification, there is no need to turn off the power of the detection circuit using a megger test switch, etc.

Time/Current characteristic curves

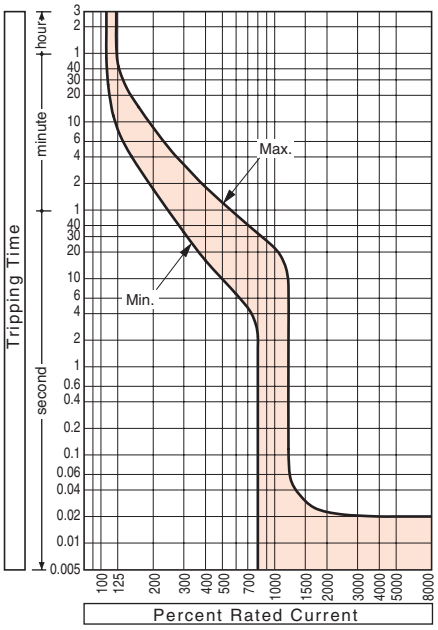

Ambient compensating curves

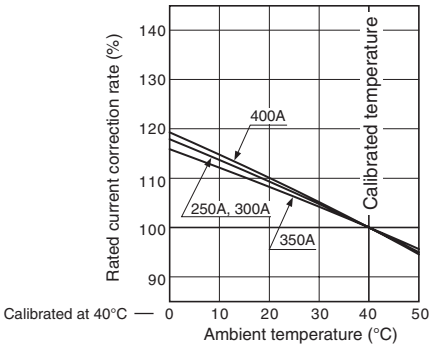

Magnetic trip pick-up current

Rated current (A)	Magnetic trip pick-up current (adjustable range) (A) $I_n \times$ 10
250	2500
300	3000
350	3500
400	4000

Note (1) : Setting tolerance: ±20%.

Single phase 3-wire circuit breakers with neutral phase open protection characteristics

The operating voltage of the single phase 3-wire circuit breakers with neutral phase open protection is set at more than 120V and less than 135V. If there is an abnormal voltage above 135V due to neutral wire open phase, the circuit breaker will reliably trip within 1 second.

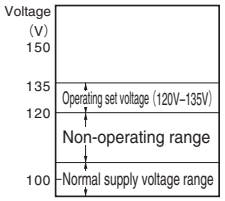

Combinations of Internally Mounted Accessories (Optional)

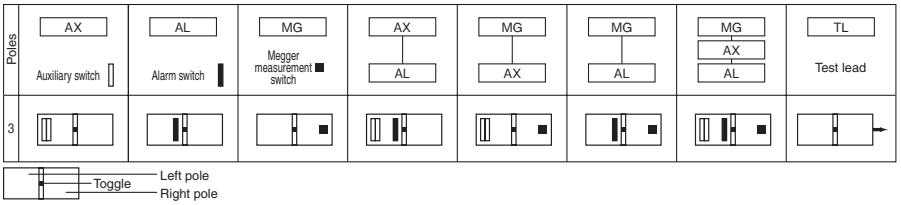

℄ : Handle Centre Line

Outline dimensions (mm) NE400-SF

Front-connected

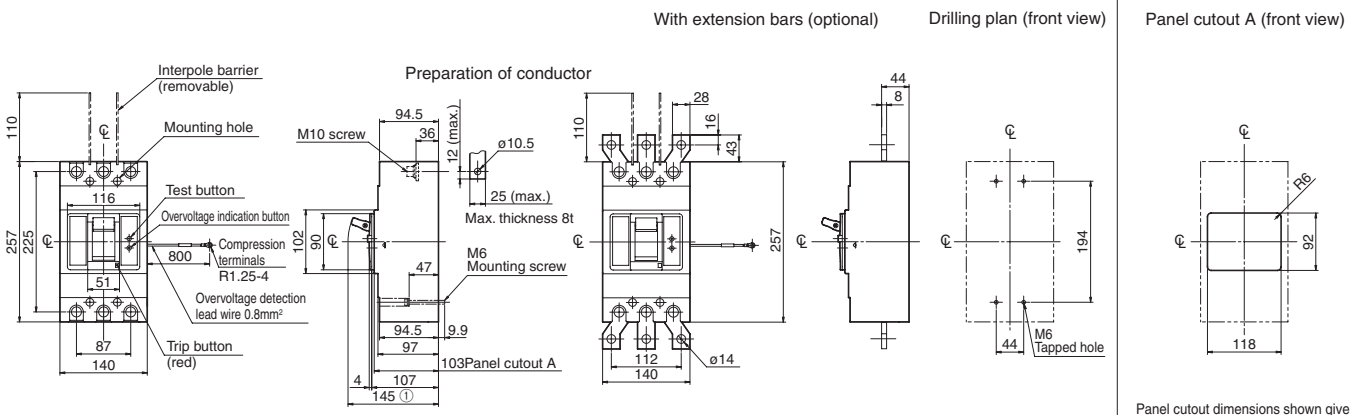

Panel cutout dimensions shown give an allowance of 1.0mm around the handle escutcheon.

Note ①: 134mm can also be used. However, the toggle extension cannot be used.

Control circuit

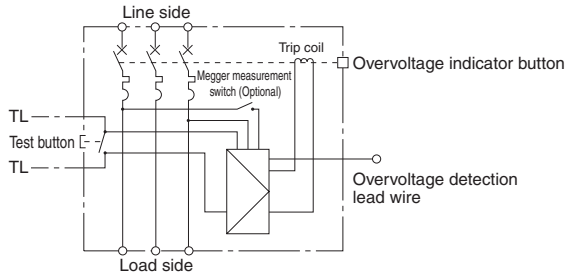

Special Breakers

Earth Leakage Circuit Breakers

Ratings and Specifications

Frame size (A)			400
Type			ZE400-SF
Number of poles			3
Phase and wires	1ø2W	⑭	●
	3ø3W, 1ø3W	⑮	●
	3ø4W		—
■ Ratings			
Rated impulse withstand voltage〔U_{imp}〕 kV			8
Rated current, A Calibrated at 40°C			250 400
			300
			350
Rated operational voltage AC V	Instantaneous tripping type		100-440 common
	Operable voltage fluctuation range V		80—484
	Time delay tripping type		100-440 common
	Operable voltage fluctuation range V		80—484
Rated sensitivity current mA	Instantaneous tripping type		30
			100/200/500 selectable
			—
	Max. operating time sec		0.1
	Time delay tripping type		100/200/500 selectable
	Max. operating time sec		0.45/1.0/2.0 selectable
	Non-operating time sec		0.1/0.5/1.2 or more
■ Rated breaking capacity, kA			
JIS C 8201-2-2 Ann.2 I_{cu}(sym)	AC	440V	25
		415V	36
		240V	50
		100V	50
Weight (◉ marked standard type) kg			4.7
■ Connections and Mountings			
Front-connected (FC)	Terminal screws		◉
	With extension bars		○
Rear-connected (RC)	Flat bar studs		○
Plug-in (PM)	For switchboards	High-performance (PMB)	—
		Standard (PMC)	—
	For distribution boards (PMD)		—
Flush-mounted (FP)	With flat bar studs		○
Draw-out type (DR)			—
TemPlug70 (PG)			—
DIN rail mount			—
■ Accessories (optional)			Symbol
Externally mounted: Motor operator			M C —
External operating handle	Breaker-mounted		H B ●
	Door-mounted (variable depth)		H P —
Toggle extension			H A ●
Mechanical interlock	Slide type		M S ●
	Link type		M L —
	Wire type		M W —
Toggle holder			H H ●
Toggle lock			H L
Terminal cover	For front-connected		C F ●
	For rear-connected and plug-in		C R ●
Terminal block for lead			T F ●
Door flange			D F —
CE marking			Non
Earth leakage trip mechanism (Current operation type)			Electronic
Overcurrent trip mechanism			Thermal-magnetic
Earth leakage indication			Mechanical button
Colour of cover			Grey Blue
Trip button (Colour)			Yes (Red)
Suitability for isolation			Yes
Reverse connection			Yes

Notes:

◉ : Standard. This configuration used unless otherwise specified.

○ : Optional standard. Specify when ordering. ● : "yes" or "available". — : "no" or "not available".

⑭ : When applying 3-pole type to a 1ø2W circuit, use both ends and do not use the central pole.

⑮ : When applying 3-pole type to a 1ø3W circuit, apply voltage to both ends and connect the neutral wire to the central pole.

Remark: The rated sensitivity current is set to 100mA before delivery.

Time/Current characteristic curves

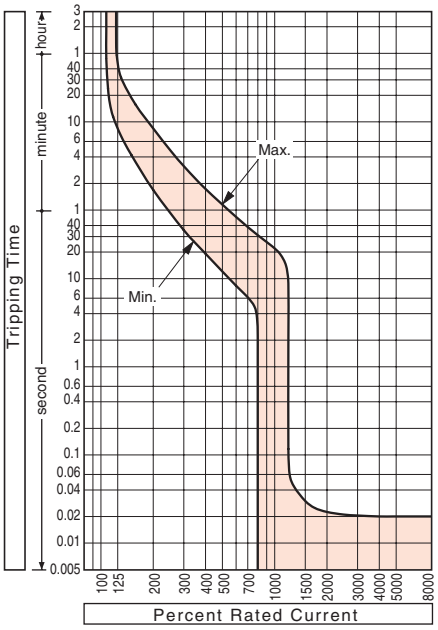

Ambient compensating curves

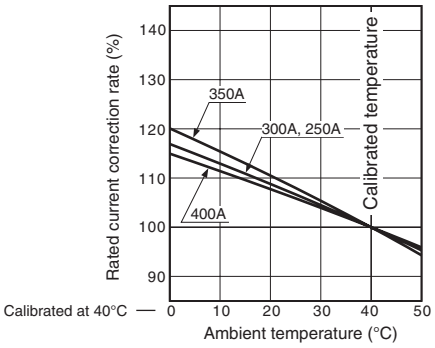

Magnetic trip pick-up current

Rated current (A) I_n	Magnetic trip pick-up current (adjustable range) (A) ×10
250	2500
300	3000
350	3500
400	4000

Note (1) : Setting tolerance: ±20%.

Earth leakage trip characteristic

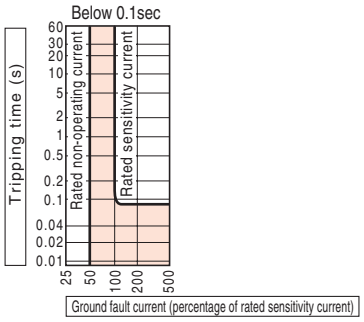

Combinations of Internally Mounted Accessories (Optional)

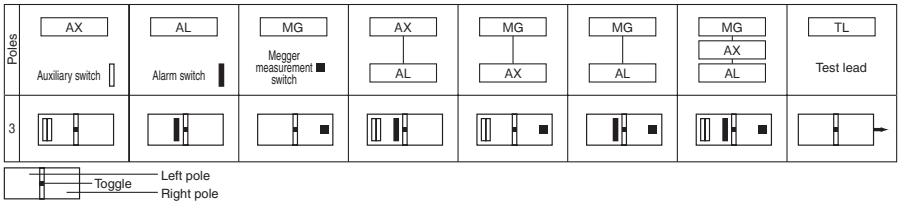

Outline dimensions (mm) ZE400-SF

Front-connected

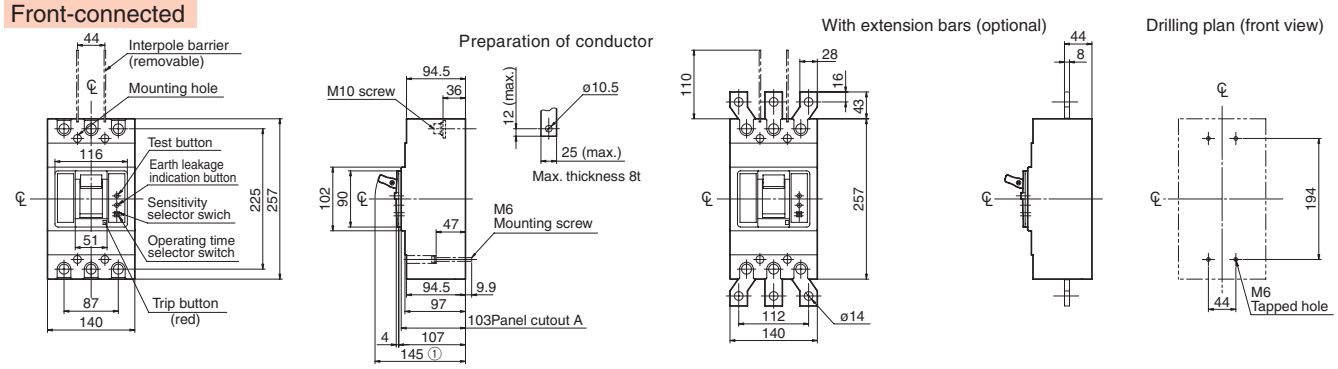

Rear-connected

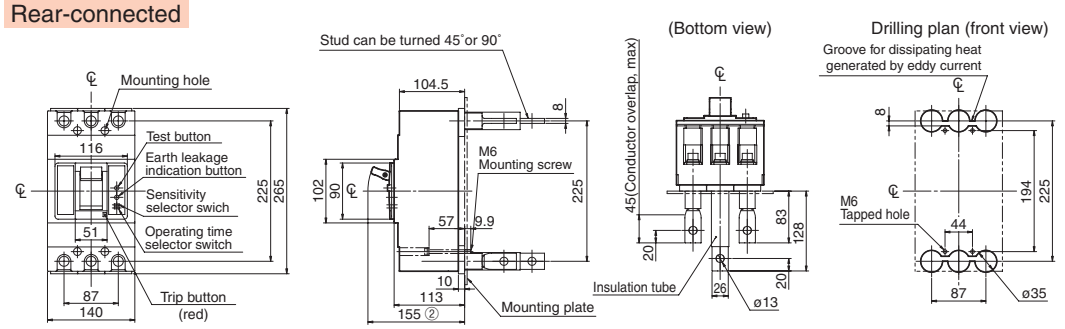

Note: Studs are factory installed in horizontal direction both on the line and load sides.

Panel cutout A (front view)

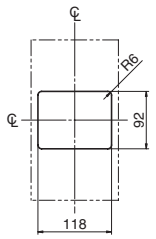

Panel cutout dimensions shown give an allowance of 1.0mm around the handle escutcheon.

Flush-mounted

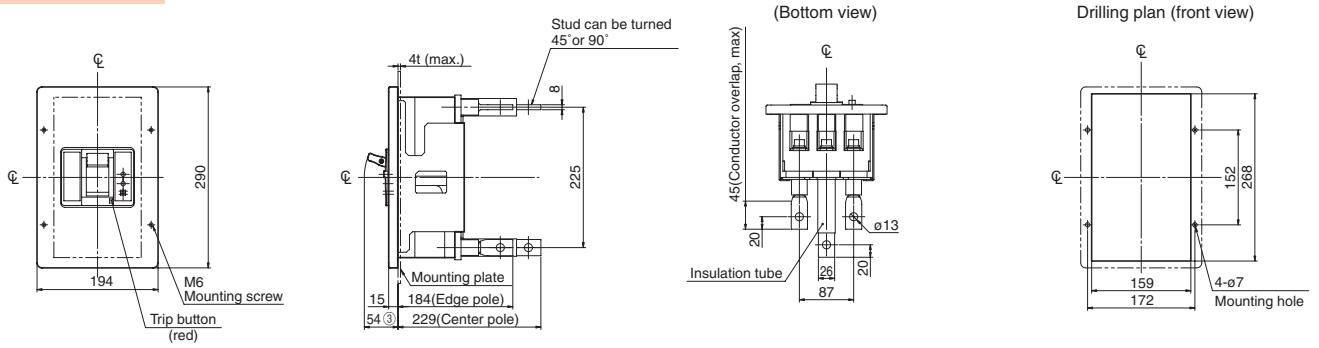

Note: Studs are factory installed in horizontal direction both on the line and load sides.

Notes ① : 134mm can also be used. However, the toggle extension cannot be used.
② : 144mm can also be used. However, the toggle extension cannot be used.
③ : 43mm can also be used. However, the toggle extension cannot be used.

Control circuit

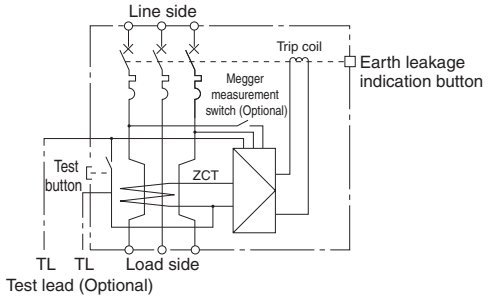

Special Breakers

Single phase 3-wire earth leakage circuit breakers with neutral phase open protection

Ratings and Specifications

Frame size (A)		400
Type		ZNE400-SF
Number of poles / Elements		3P3E ㊵
Phase and wires		1ø3W
■ Ratings		
Rated current, A		250
Calibrated at 40°C		300
		350
		400
Rated operational voltage AC V		100/200
Rated impulse withstand voltage〔U_{imp}〕 kV		8
Rated sensitivity current mA	Instantaneous tripping type	30
		100/200/500 selectable
	Max. operating time sec	0.1
	Time delay tripping type	100/200/500 selectable
	Max. operating time sec	0.45/1.0/2.0 selectable
	Non-operating time sec	0.1/0.5/1.2 or more
Single 3-phase neutral wire open phase protection characteristics	Rated operating overvoltage AC V	135
	Rated non-operating overvoltage AC V	120
	Rated overvoltage operating time (sec)	1 or less
■ Rated breaking capacity, kA		
JIS C 8201-2-2 Ann.2 I_{cu} (sym) AC 100/200V		50
Weight (◉ marked standard type) kg		4.7
■ Connections and Mountings		
Front-connected (FC)	Terminal screws	◉
	With extension bars	○
DIN rail mount		—
■ Accessories (optional)	Symbol	
Externally mounted: Motor operator	M C	—
External operating handle: Breaker-mounted	H B	●
External operating handle: Door-mounted (variable depth)	H P	—
Toggle extension	H A	●
Mechanical interlock: Slide type	M S	●
Mechanical interlock: Link type	M L	—
Mechanical interlock: Wire type	MW	—
Toggle holder	H H	●
Toggle lock	H L	
Terminal cover For front-connected	C F	●
Terminal block for lead	T F	●
Door flange	D F	—
CE marking		Non
Earth leakage trip mechanism (Current operation type)		Electronic
Overcurrent trip mechanism		Thermal-magnetic
Overvoltage / Earth leakage indication		Mechanical button
Colour of cover		Grey Blue
Trip button (Colour)		Yes (Red)
Suitability for isolation		Yes
Reverse power flow circuit		Yes

Notes:

◉ : Standard. This configuration used unless otherwise specified.

○ : Optional standard. Specify when ordering. ● : "yes" or "available". — : "no" or "not available".

㊵ : They can also be applied to circuits where overcurrent flows in the neutral wire. Can be used as a main circuit breaker for photovoltaic power generation systems.

Time/Current characteristic curves

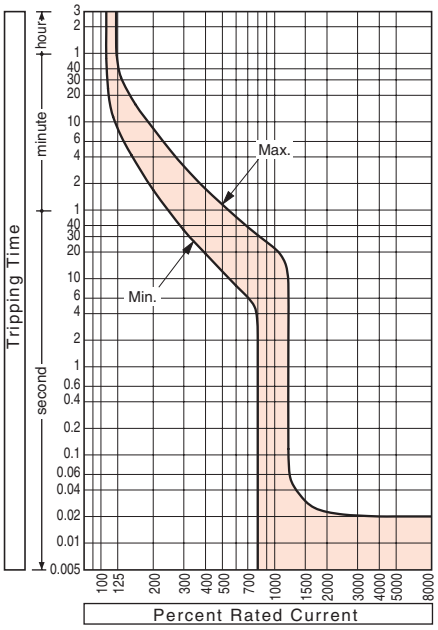

Ambient compensating curves

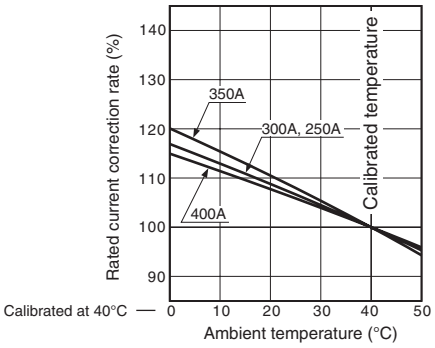

Magnetic trip pick-up current

Rated current (A)	Magnetic trip pick-up current (adjustable range) (A) $I_n \times$ 10
250	2500
300	3000
350	3500
400	4000

Note (1) : Setting tolerance: ±20%.

Earth leakage trip characteristic

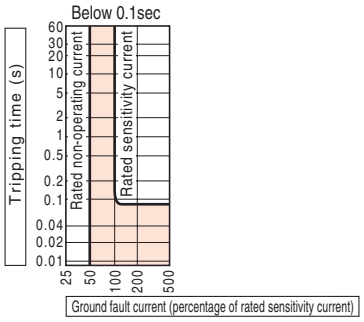

Combinations of Internally Mounted Accessories (Optional)

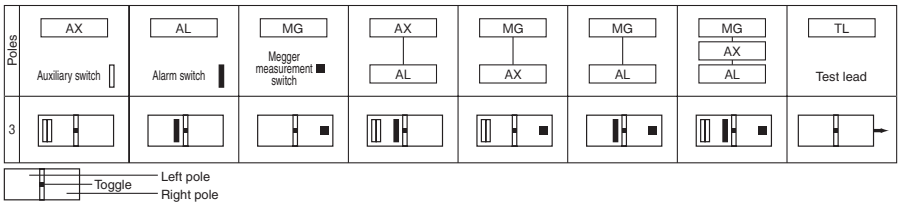

℄ : Handle Centre Line

Outline dimensions (mm) ZNE400-SF

Front-connected

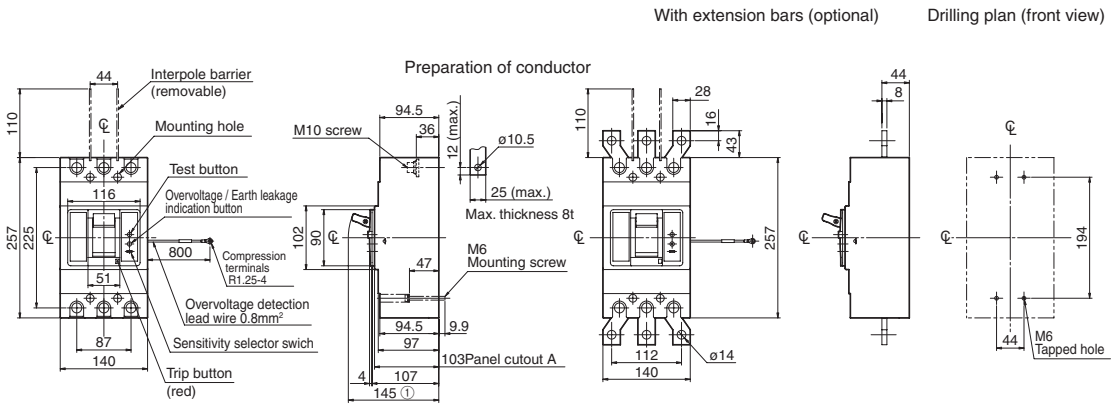

Panel cutout A (front view)

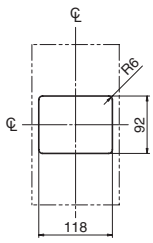

Panel cutout dimensions shown give an allowance of 1.0mm around the handle escutcheon.

Note ①: 134mm can also be used. However, the toggle extension cannot be used.

Single phase 3-wire circuit breakers with neutral phase open protection characteristics

The operating voltage of the single phase 3-wire circuit breakers with neutral phase open protection is set at more than 120V and less than 135V. If there is an abnormal voltage above 135V due to neutral wire open phase, the circuit breaker will reliably trip within 1 second.

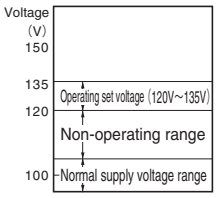

Control circuit

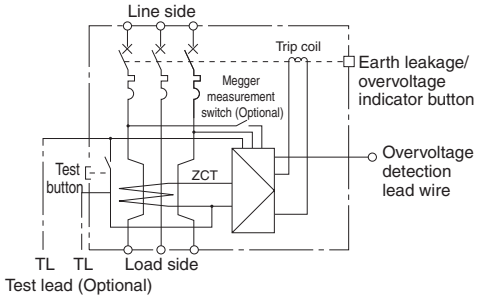

Heat Resistant Circuit Breaker for Emergency Power Supplies

Type 2 heat resistance breakers

℄ : Handle Centre Line

Outline dimensions (mm) (Front-connected)

FC-52ET Type / FC-53ET Type

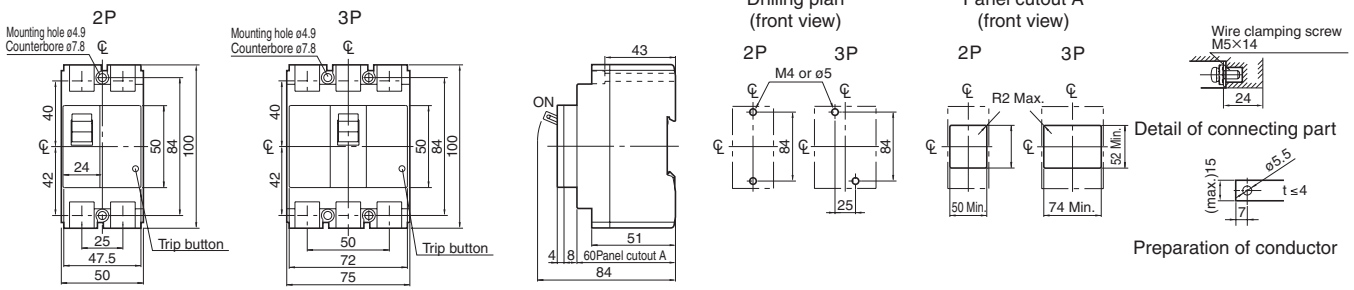

FC-50HET Type

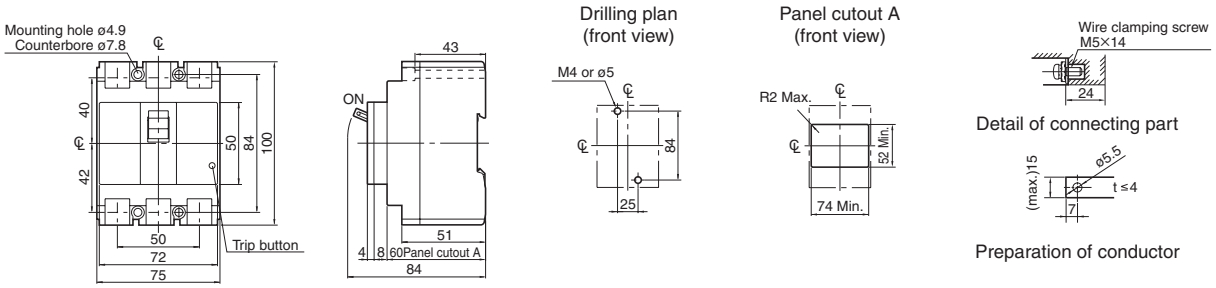

FC-100ET Type

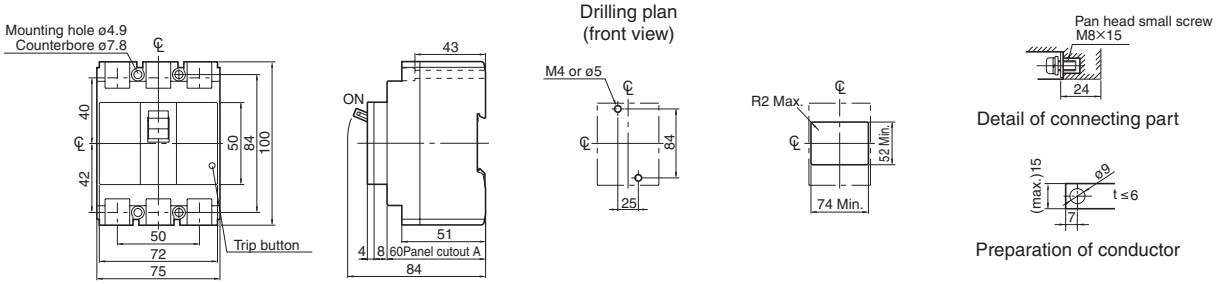

FC-225ET Type

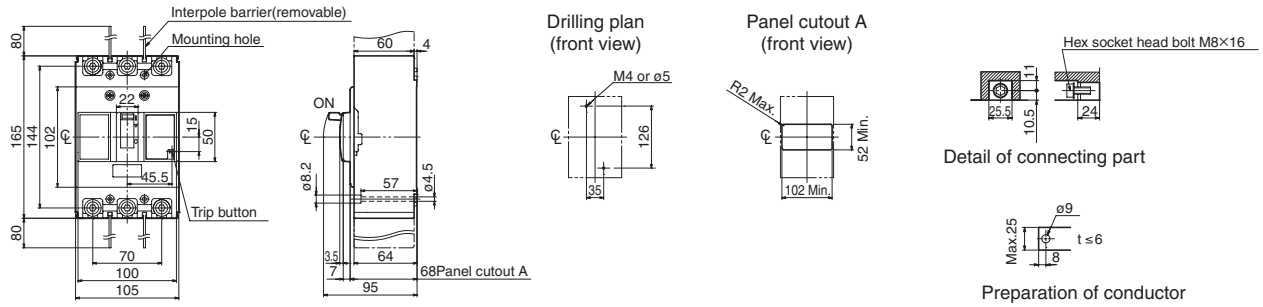

FC-400ET Type

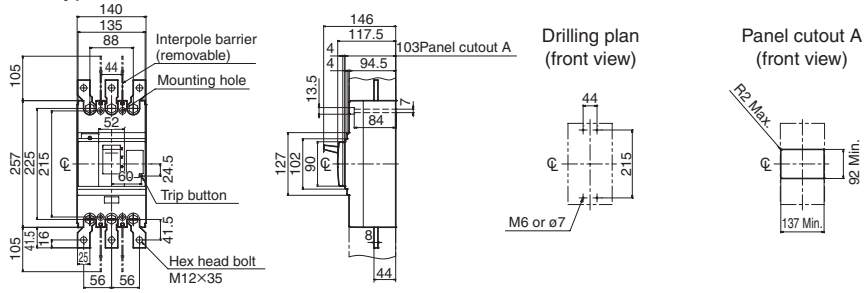

Note: Please contact us for characteristics and other details.

Earth Leakage Relays

TZS series

Outline dimensions (mm)

• Earth Leakage Relays (TZD-HD, TZD-MD)

Front-connected

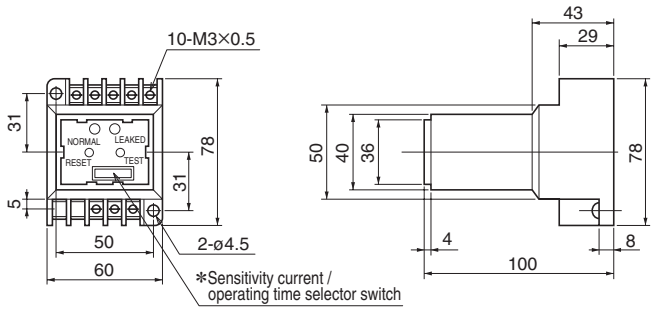

Drilling plan

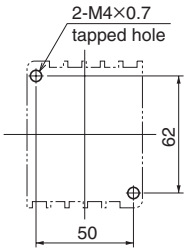

Flush-mounted

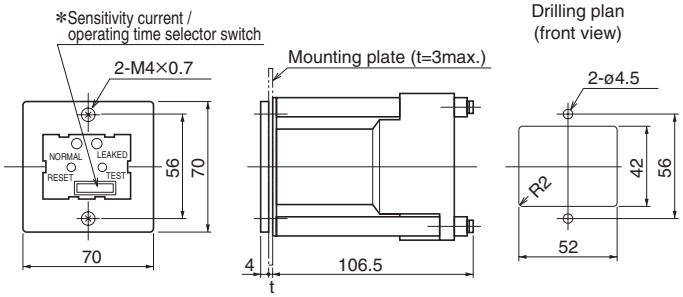

Circuit diagram

• Earth Leakage Relays

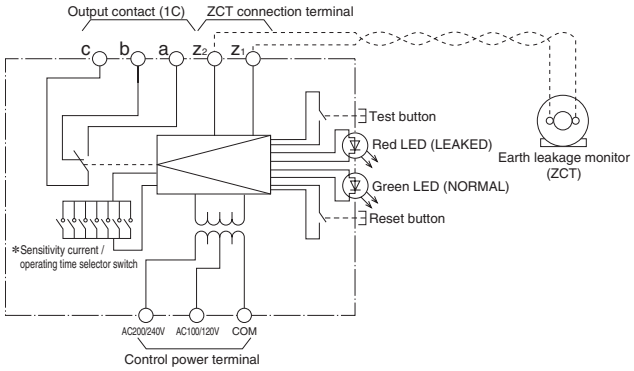

* TZS-HD type is not equipped with a selector switch.

Note: The output contacts remain operational until the RESET button is pressed.
If the control power supply fails, the contacts automatically reset.
Tightening torque of M3 terminal screws: 0.45 to 0.73 Nm

Time / Current characteristic curves

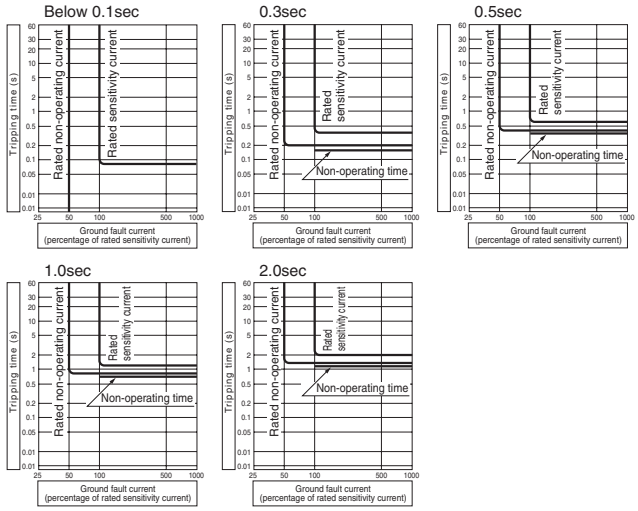

• Earth leakage monitor

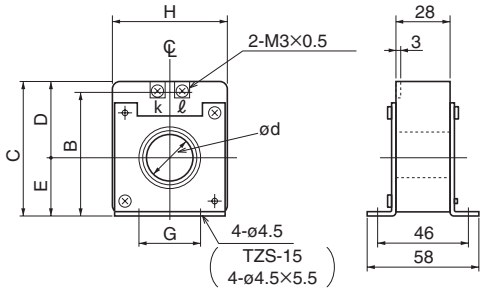

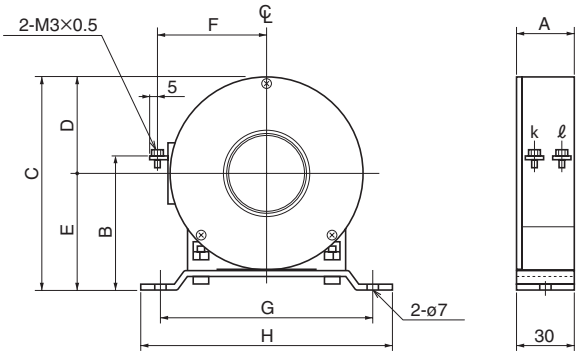

ZCT	Type	Earth leakage monitor type	d ø	A	B	C	D	E	F	G	H
TZS-15	I	TZS-HD, TZS-MD	15	—	55	60	32	28	—	25	46
TZS-24	I	TZS-HD, TZS-MD	24	—	67	72	40	32	—	34	58
TZS-40	II	TZS-HD, TZS-MD	40	30	71	113	51	62	57	110	130
TZS-68	II	TZS-HD, TZS-MD	68	42	85	141	65	76	70	134	150
TZS-100	II	TZS-HD, TZS-MD	100	45	105	181	85	96	90	150	170

Circuit Breaker with motor operators

Outline dimensions (mm) (T2MC12) S100-GF, S125-GF, ZAS50-GF, ZAS100-GF, ZAS125-GF, ZS100-GF, ZS125-GF

Front-connected

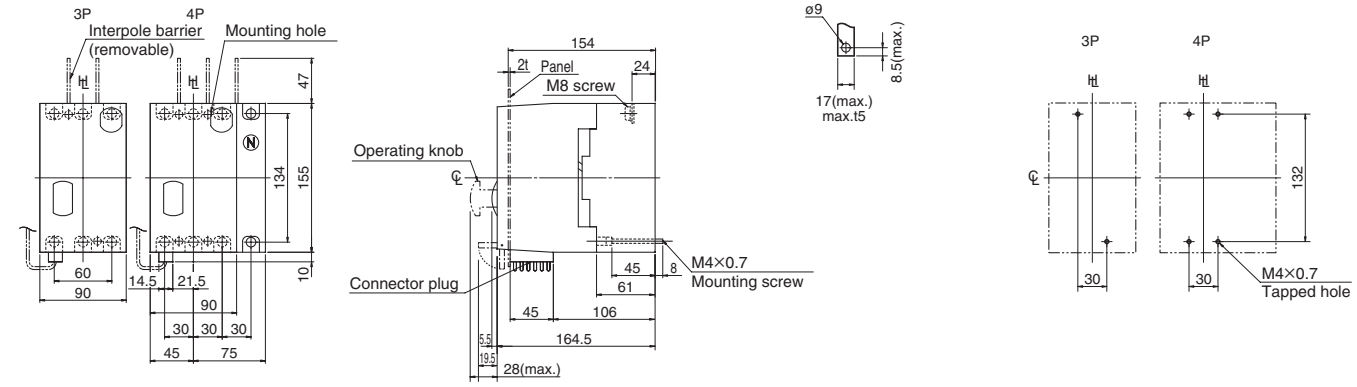

Rear-connected

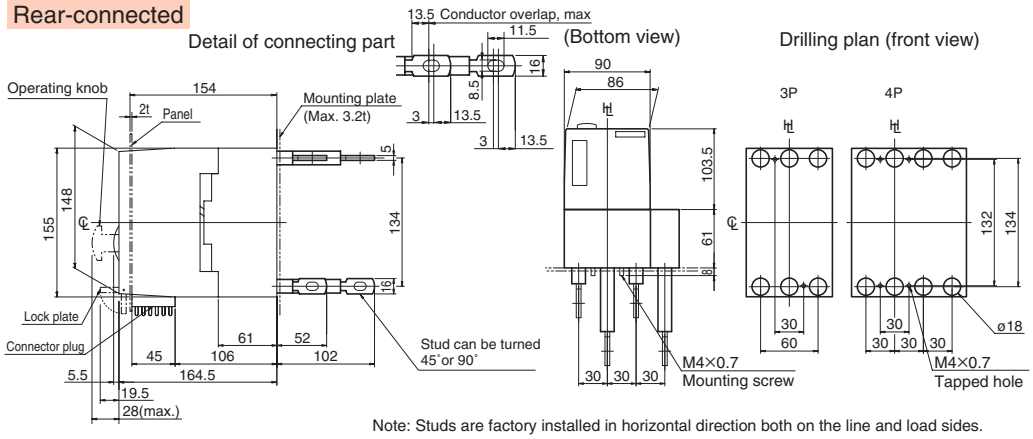

Note: Studs are factory installed in horizontal direction both on the line and load sides.

Panel cutout (front view)

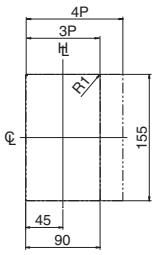

Panel cutout dimensions shown give an allowance of 1.5mm around motor operator.

Plug-in (Standard)

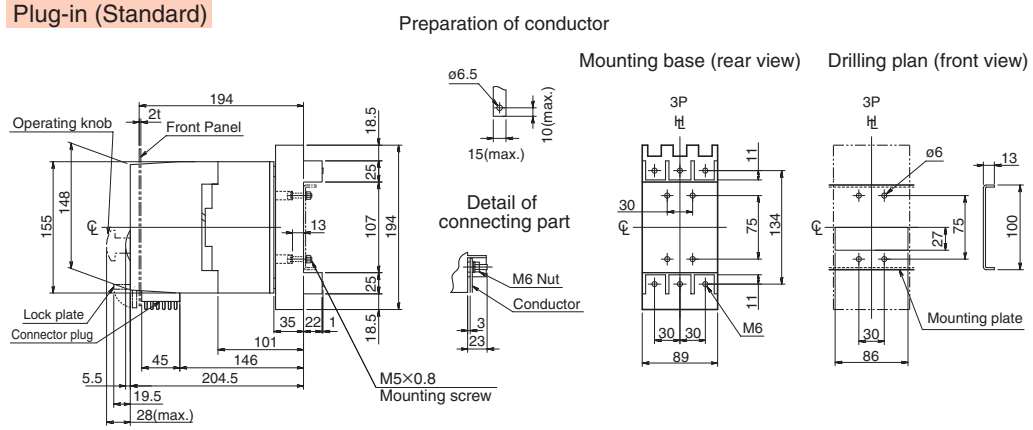

Panel hinge position (hatching area) (bottom view)

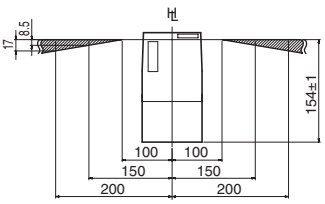

Plug-in (High-performance)

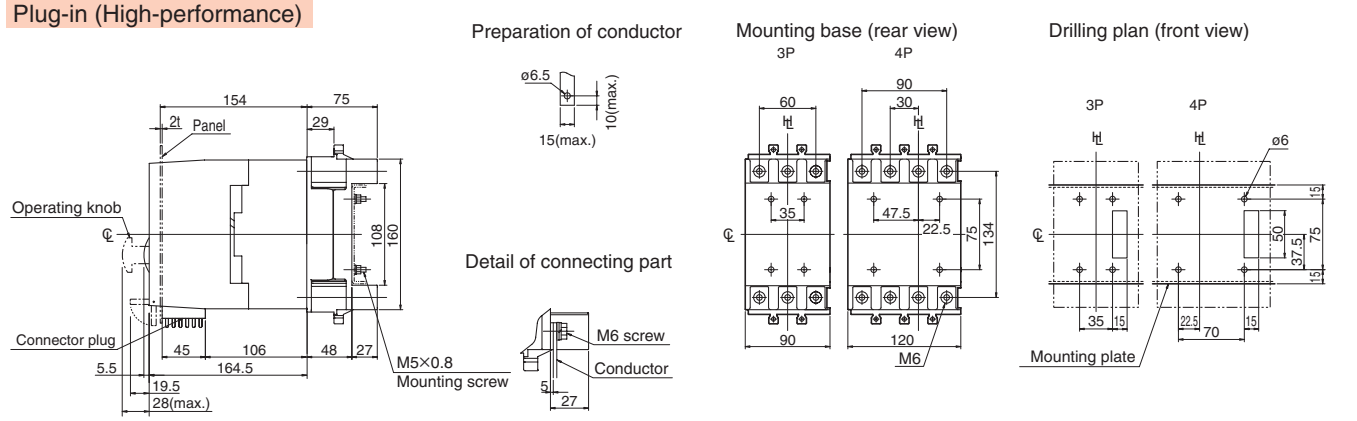

Notes ① : Some connection methods and number of poles are not compatible depending on the model. See the outline drawing for each model for compatibility.
② : When the motor operator is mounted, the test button, reset button, sensitivity selector switch, and operating time selector switch cannot be operated.

Outline dimensions (mm) (TPMC16S) PS50-PF, PS125-NF/PF/NE/PE/NM/NN

Front-connected

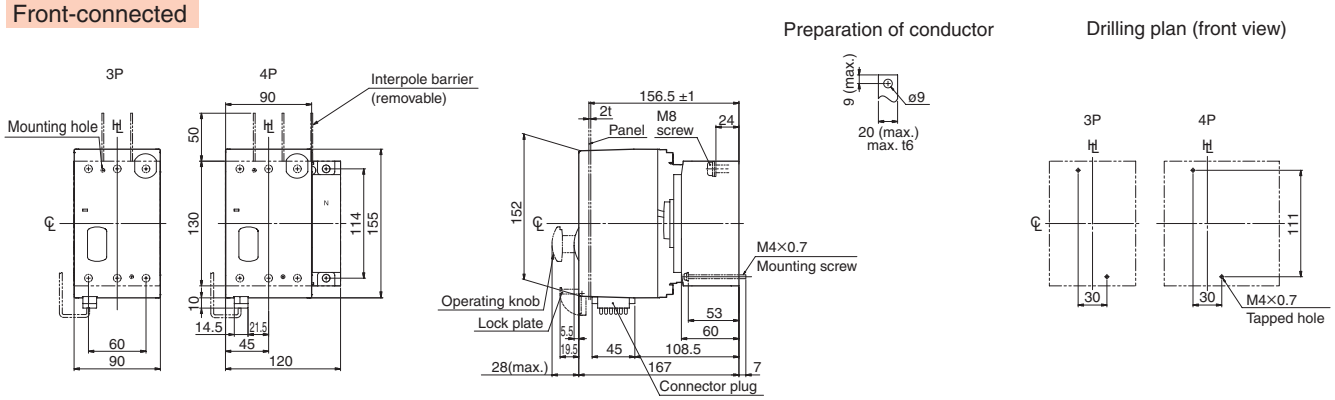

Rear-connected

Rated current[A]	C
15 ~ 50	4
60 ~ 125	5

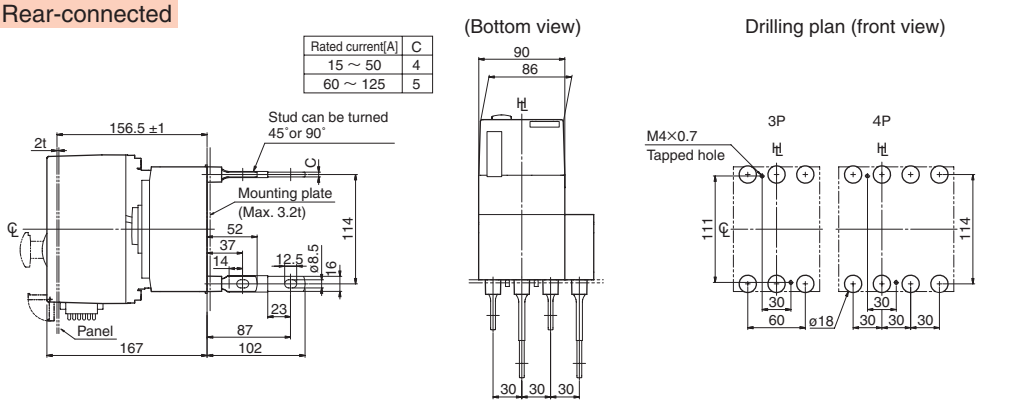

Note: Studs are factory installed in horizontal direction both on the line and load sides.

Panel cutout (front view)

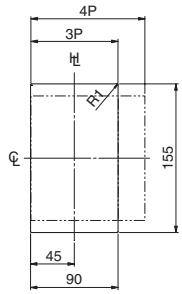

Panel cutout dimensions shown give an allowance of 1.5mm around motor operator.

Plug-in (Standard)

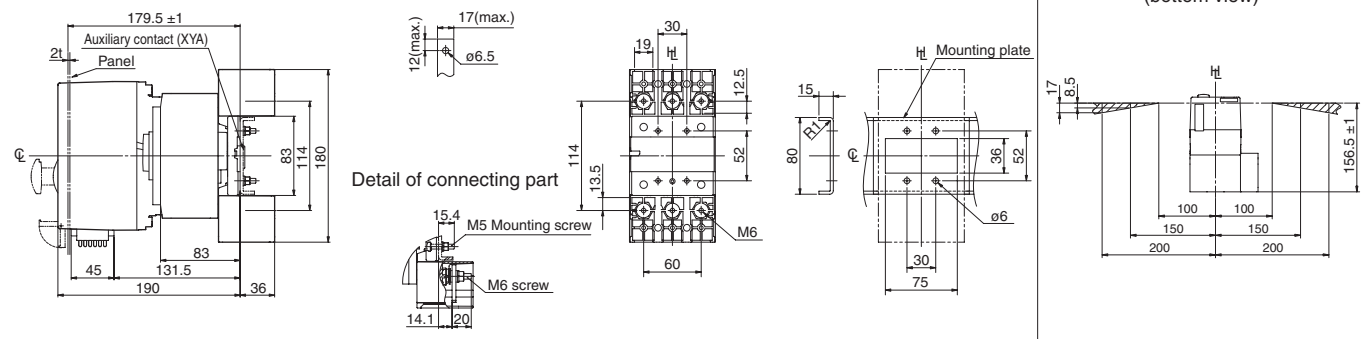

Plug-in (High-performance)

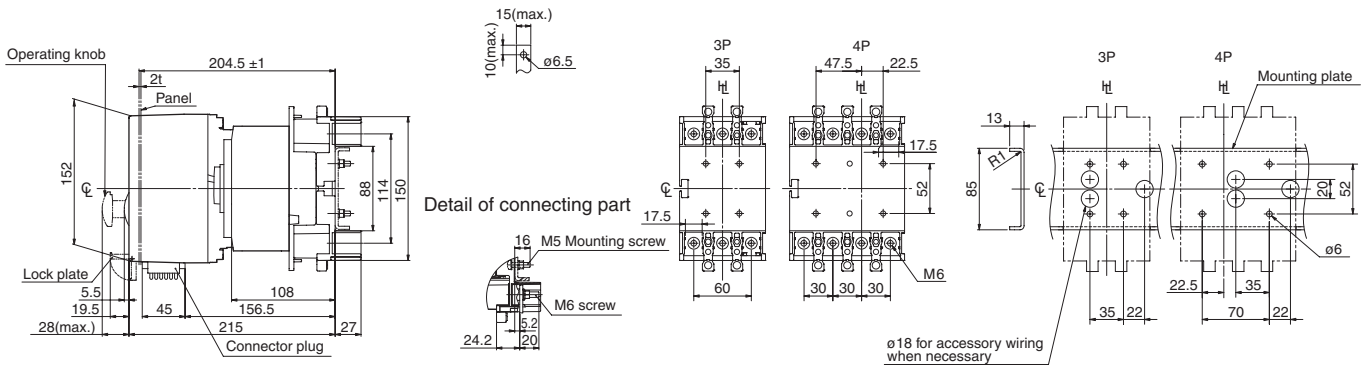

Note ①: Some connection methods and number of poles are not compatible depending on the model. See the outline drawing for each model for compatibility.

Circuit Breaker with motor operators

Outline dimensions (mm) (T2MC25) ZAS225-GF, ZAS250-GF, ZS225-GF, ZS250-GF

Front-connected

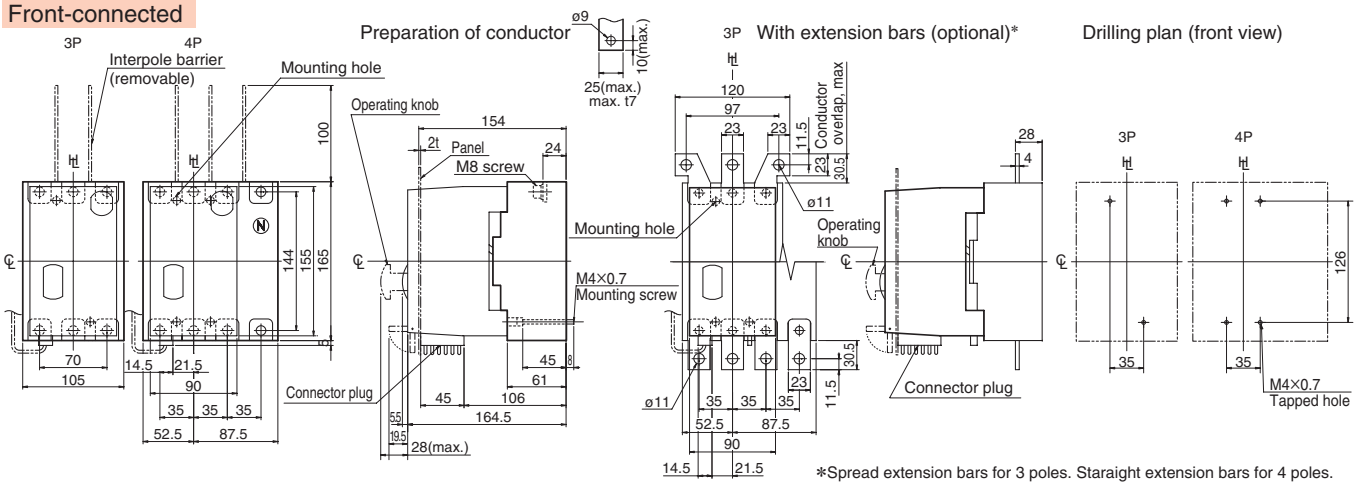

*Spread extension bars for 3 poles. Staraight extension bars for 4 poles.

Rear-connected

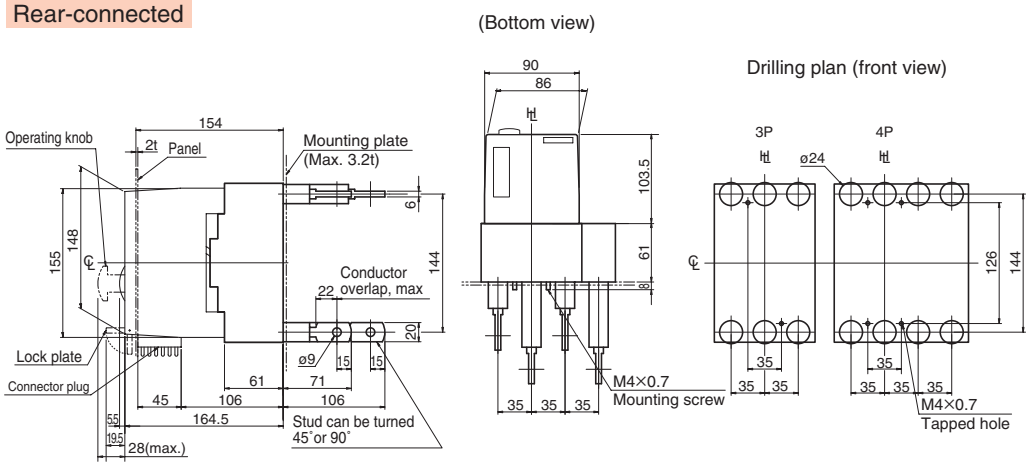

Note: Studs are factory installed in horizontal direction both on the line and load sides.

Panel cutout (front view)

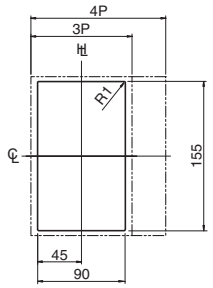

Panel cutout dimensions shown give an allowance of 1.5mm around motor operator.

Panel hinge position (hatching area) (bottom view)

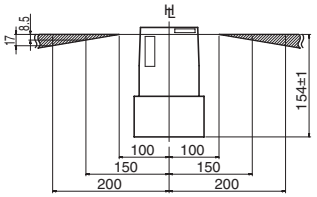

Note: When the motor operator is mounted, the test button, reset button, sensitivity selector switch, and operating time selector switch cannot be operated.

Outline dimensions (mm) (T2MC25L) E250-SF, S250-SF, S250-SM/SN, ZAE250-SF, ZAS250-SF, NAE250-SF, NAS250-SF, NE250-SF, NS250-SF, ZE250-SF, ZS250-SF/SM, ZNE250-SF, ZNS250-SF

Front-connected

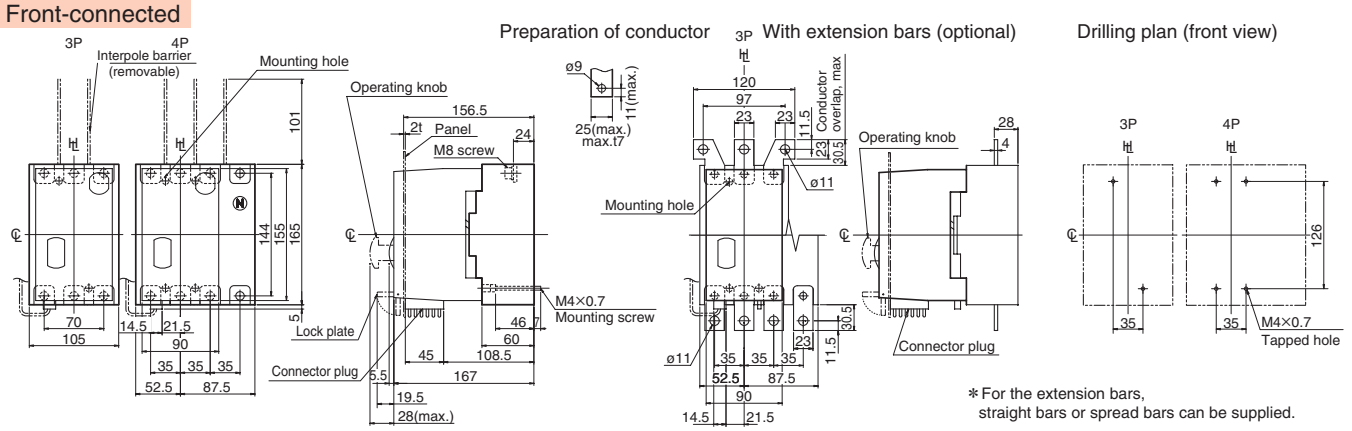

Rear-connected

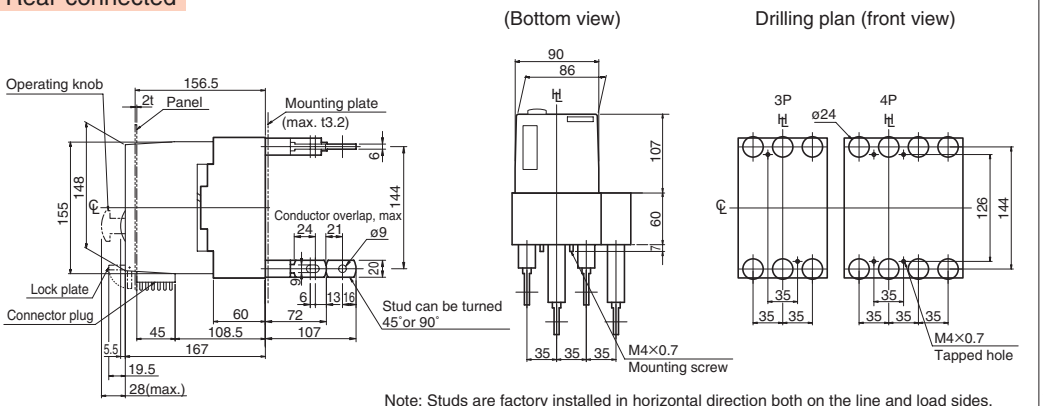

Note: Studs are factory installed in horizontal direction both on the line and load sides.

Panel cutout (front view)

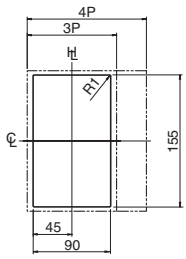

Panel cutout dimensions shown give an allowance of 1.5mm around motor operator.

Plug-in (Standard)

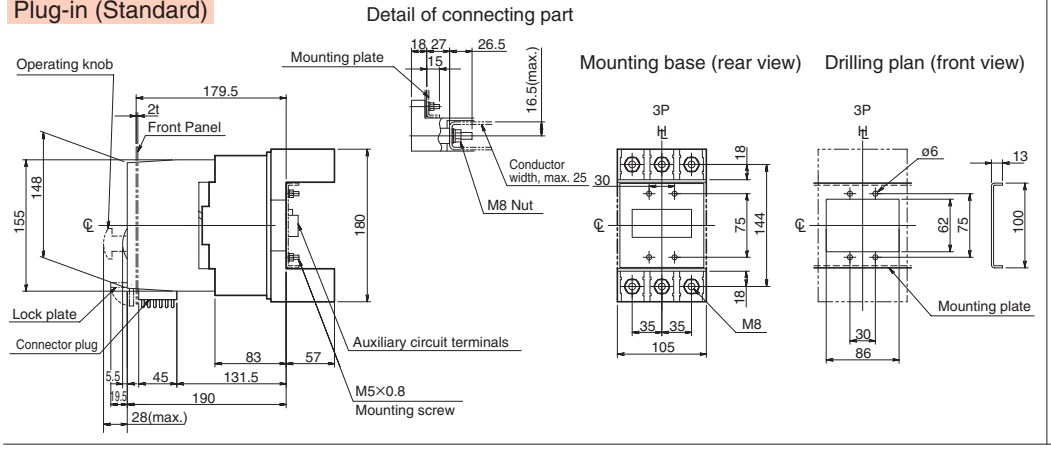

Panel hinge position (hatching area) (bottom view)

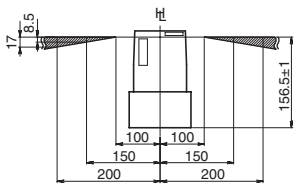

Notes ① : Some connection methods and number of poles are not compatible depending on the model. See the outline drawing for each model for compatibility.
② : When the motor operator is mounted, the test button, reset button, sensitivity selector switch, and operating time selector switch cannot be operated.

Outline dimensions (mm) (TPMC25S) PS250-PF/NE/PE/NN

Front-connected

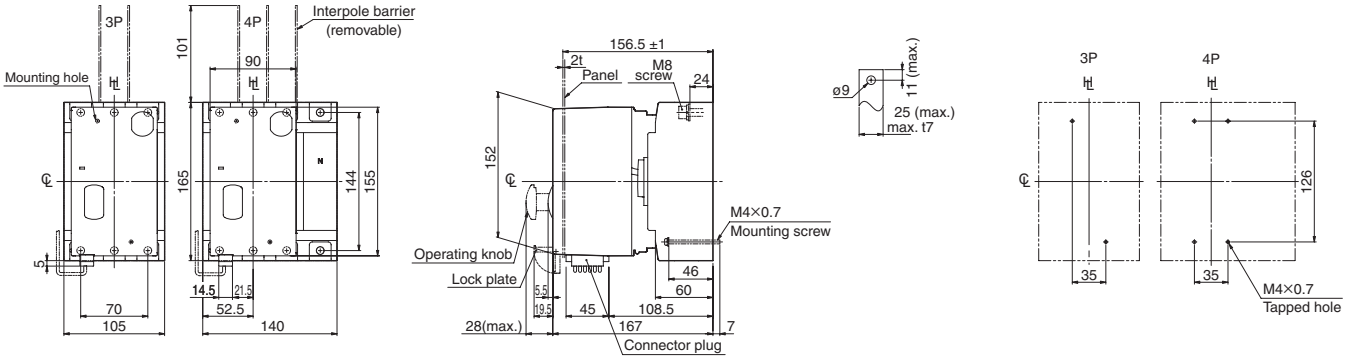

Rear-connected

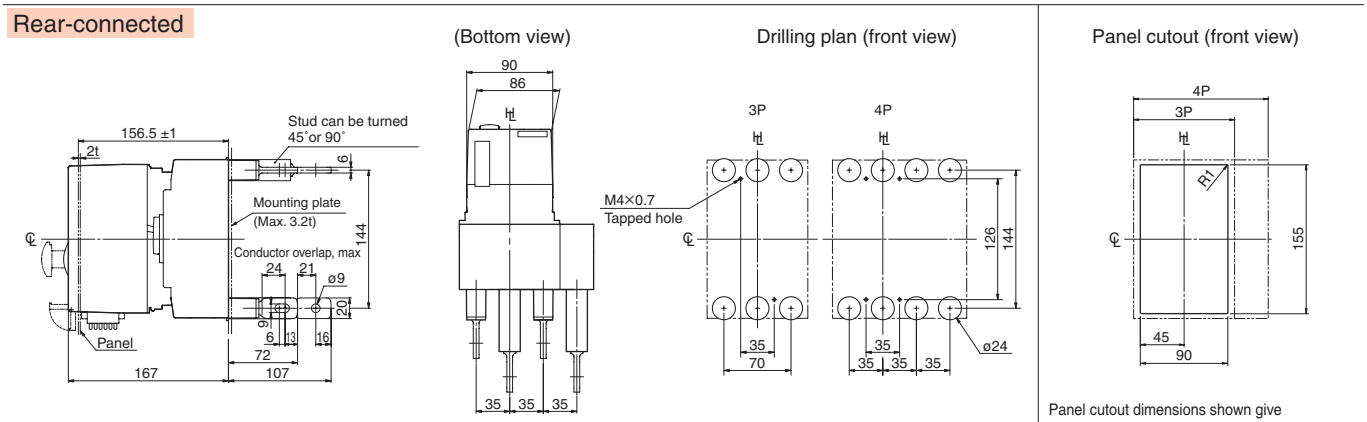

Note: Studs are factory installed in horizontal direction both on the line and load sides.

Panel cutout dimensions shown give an allowance of 1.5mm around motor operator.

Plug-in (Standard)

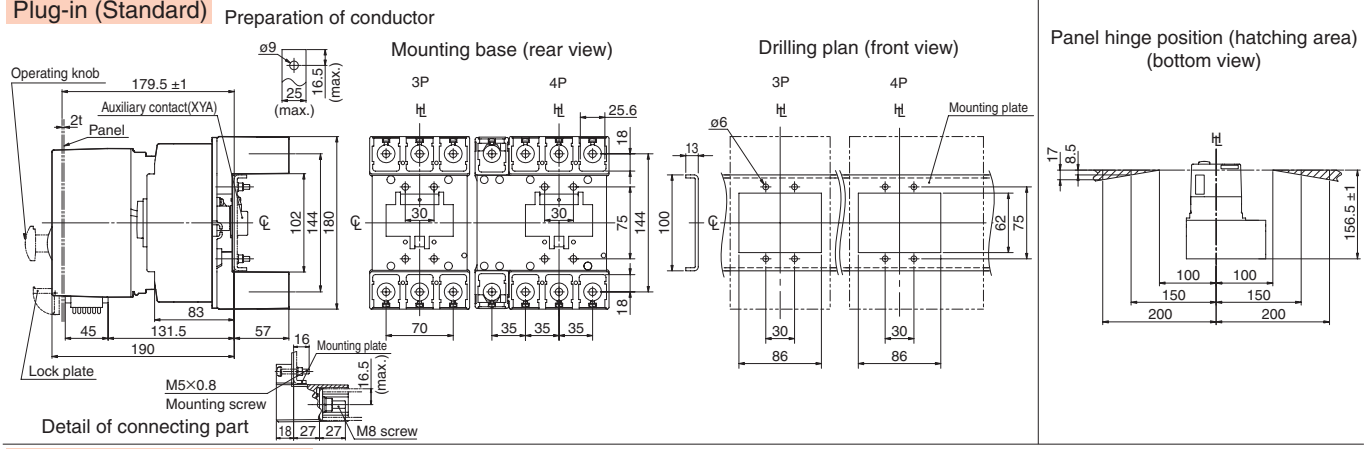

Plug-in (High-performance)

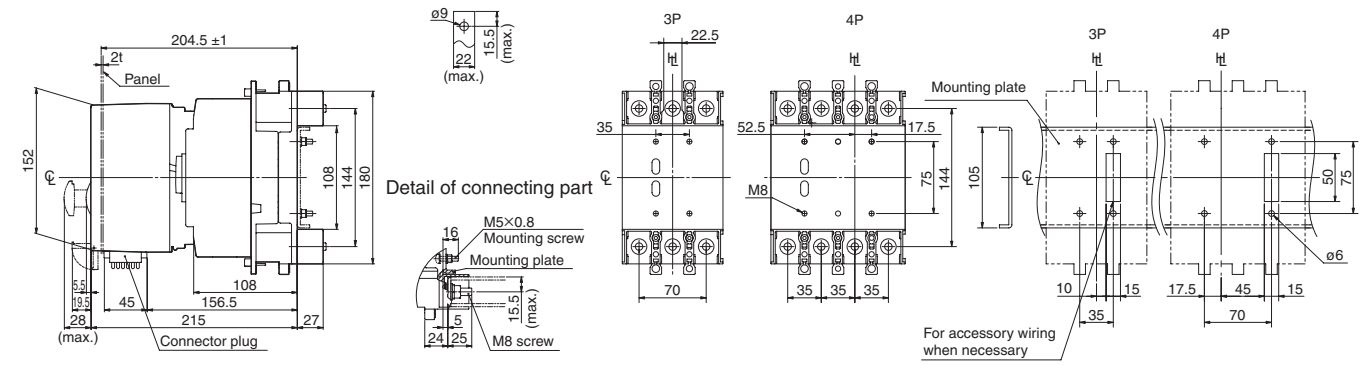

Note ①: Some connection methods and number of poles are not compatible depending on the model. See the outline drawing for each model for compatibility.

Outline dimensions (mm) (T2MC25) H100-NF, L100-NF, H125-NF, L125-NF, H225-NF/NE, L225-NF, H250-NF, L250-NF

Front-connected

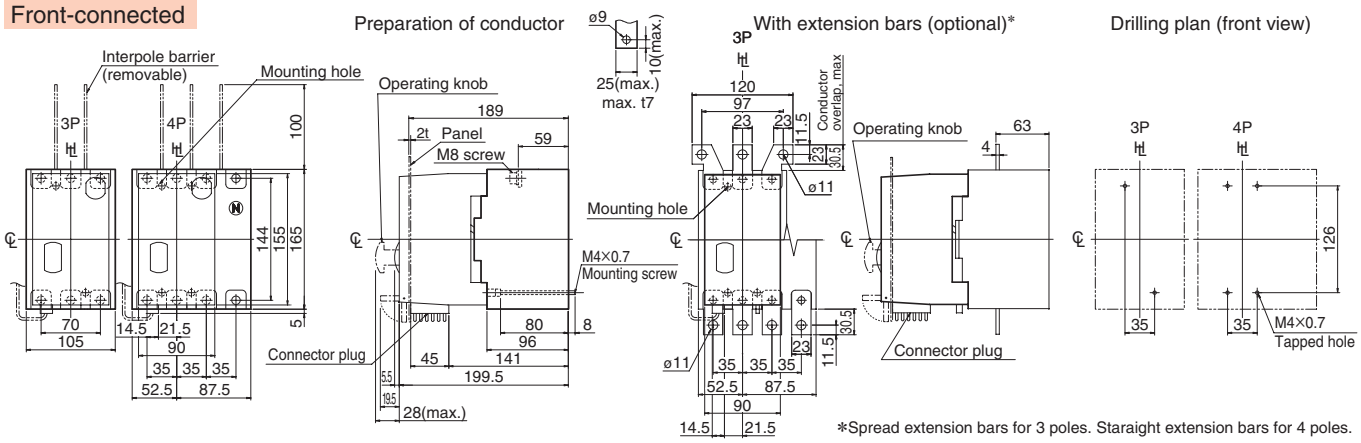

Rear-connected

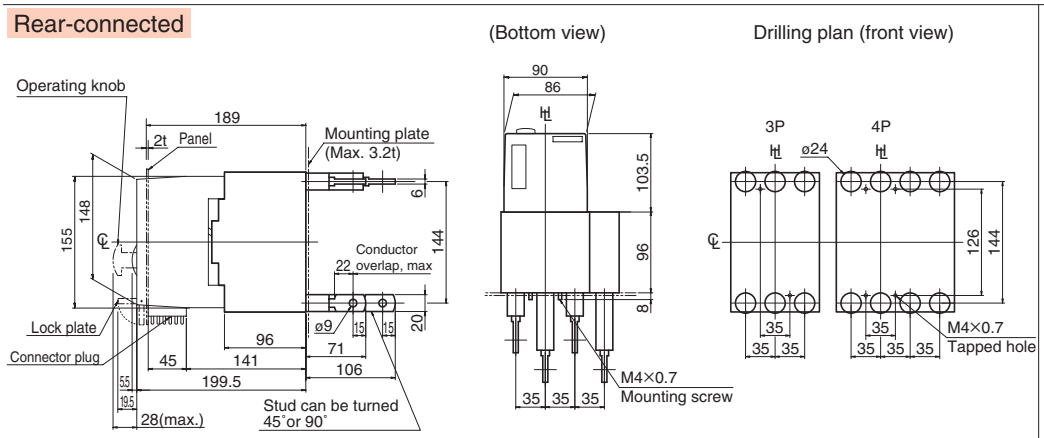

Note: Studs are factory installed in horizontal direction both on the line and load sides.

Panel cutout (front view)

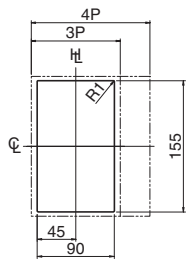

Panel cutout dimensions shown give an allowance of 1.5mm around motor operator.

Plug-in (Standard)

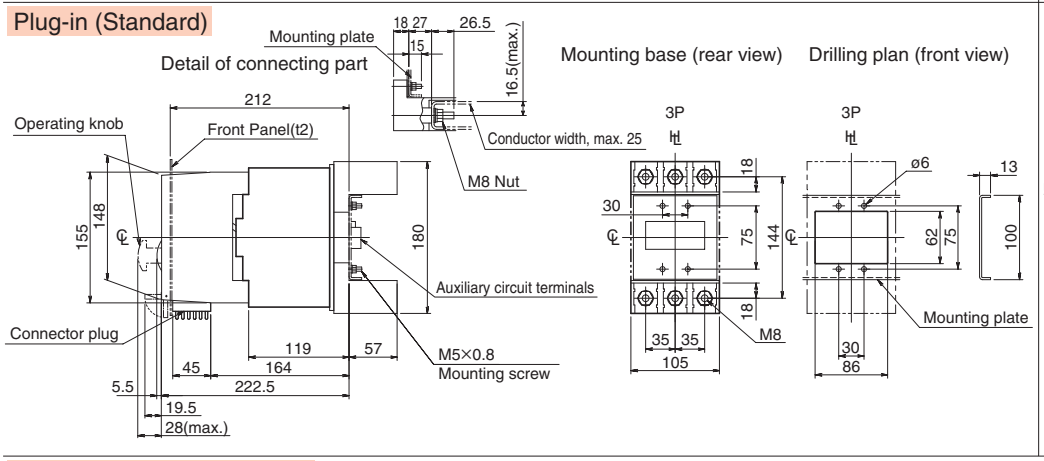

Panel hinge position (hatching area) (bottom view)

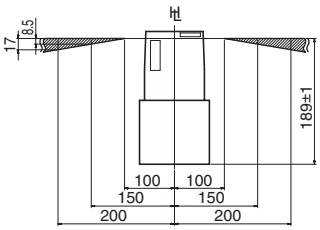

Plug-in(High-performance)

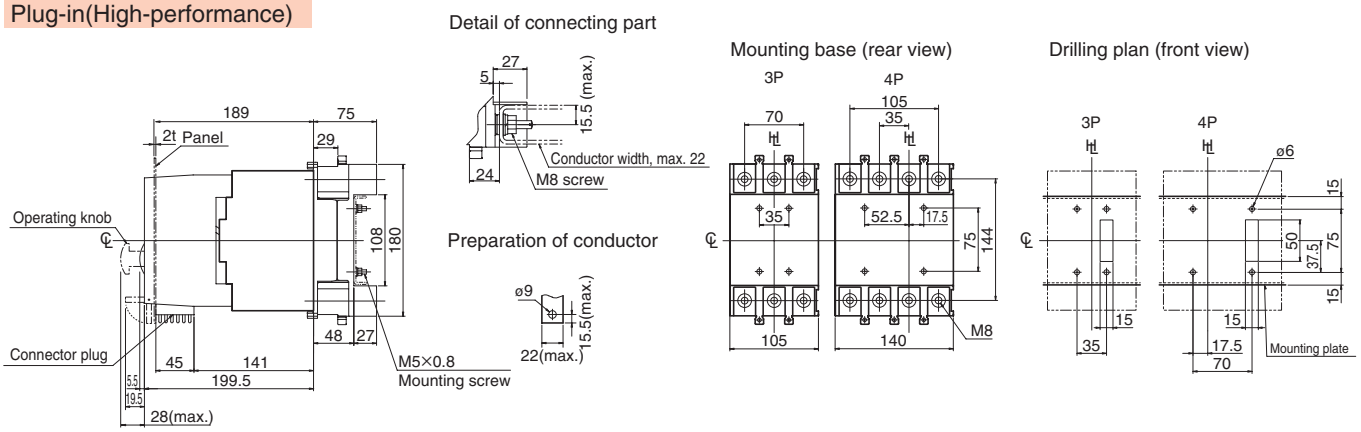

Note: Some connection methods and number of poles are not compatible depending on the model. See the outline drawing for each model for compatibility.

Circuit Breaker with motor operators

Outline dimensions (mm) (T2MC40) E400-NF, ZAE400-NF, ZAS400-NF/GF, NAE400-NF, NAS400-NF, NE400-NF, NS400-NF, ZE400-NF, ZS400-NF/GF, ZNE400-NF, ZNS400-NF

Front-connected

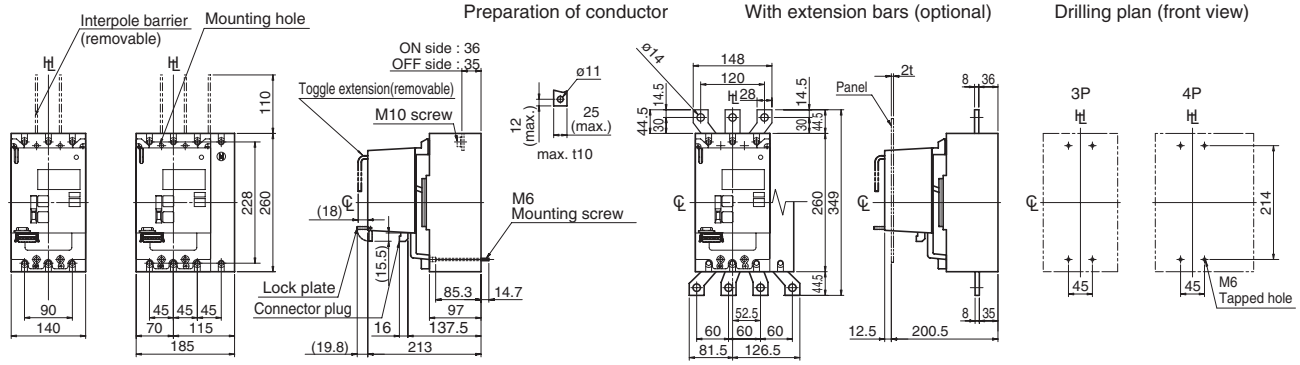

Rear-connected

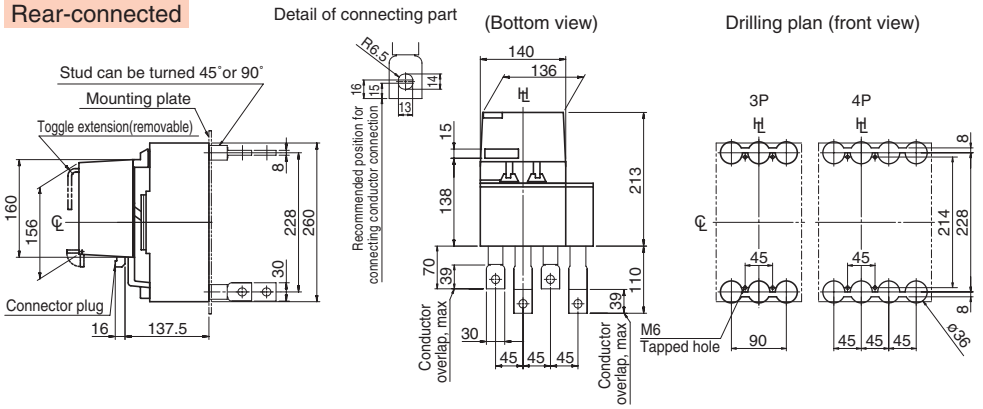

Note: Studs are factory installed in horizontal direction both on the line and load sides.

Panel cutout (front view)

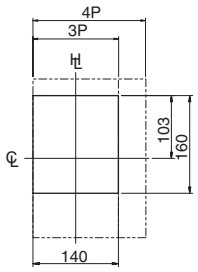

Panel cutout dimensions shown give an allowance of 1.5mm around motor operator.

Panel hinge position (hatching area) (bottom view)

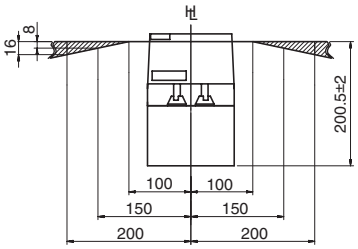

Notes ① : Some connection methods and number of poles are not compatible depending on the model. See the outline drawing for each model for compatibility.
② : When the motor operator is mounted, the test button, reset button, sensitivity selector switch, and operating time selector switch cannot be operated.

Outline dimensions (mm) (TPMC63S) PS400-CF/NF/GF/NE/GE/NN, PH400-CF/CE

Front-connected

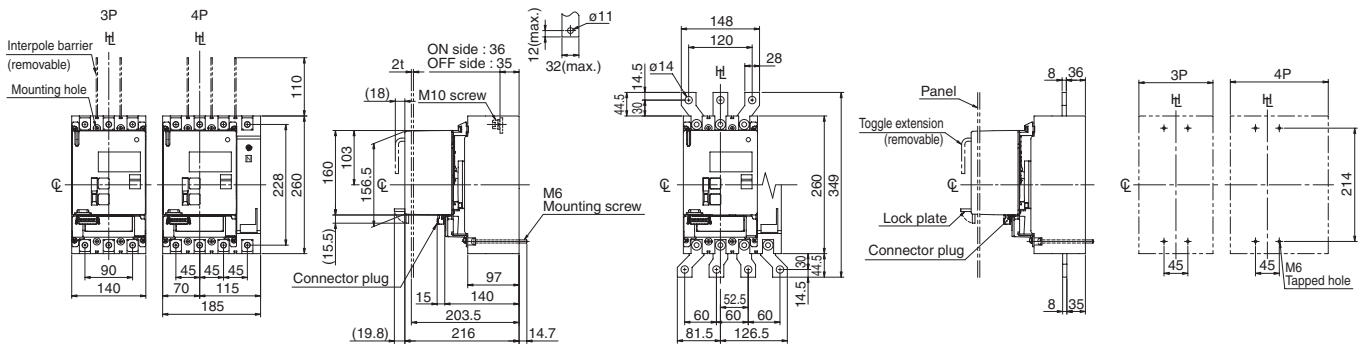

Rear-connected

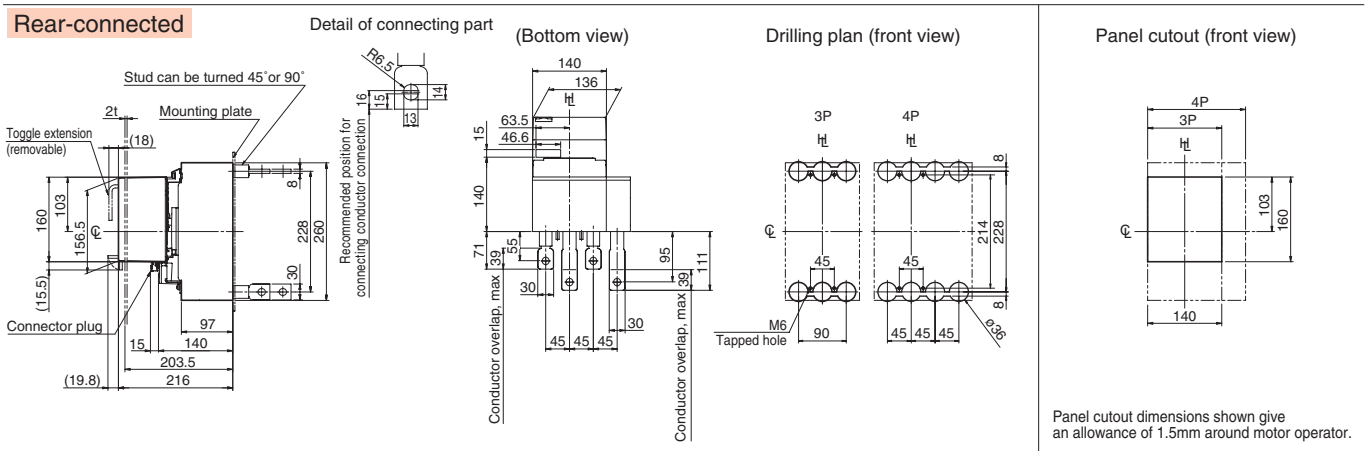

Plug-in (Standard)

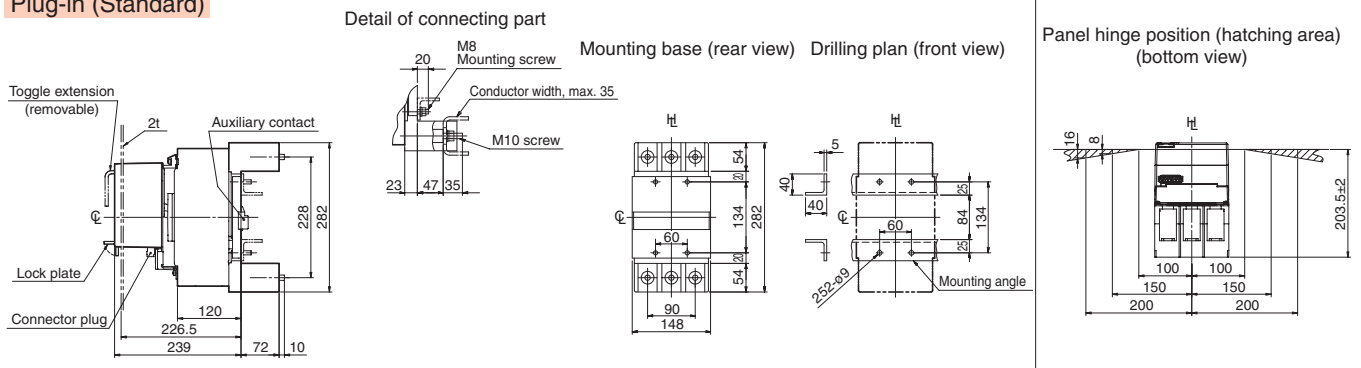

Plug-in (High-performance)

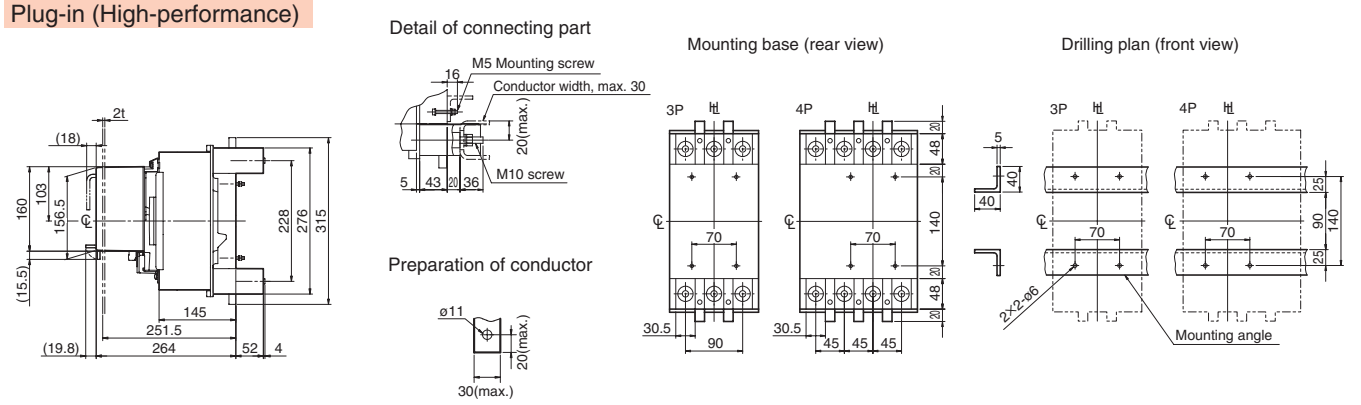

Note: Some connection methods and number of poles are not compatible depending on the model. See the outline drawing for each model for compatibility.

Circuit Breaker with motor operators

Outline dimensions (mm) (TPMC63S) PS630-CF/NF/GF/NE/GE/NN, PH630-CF/CE

Front-connected

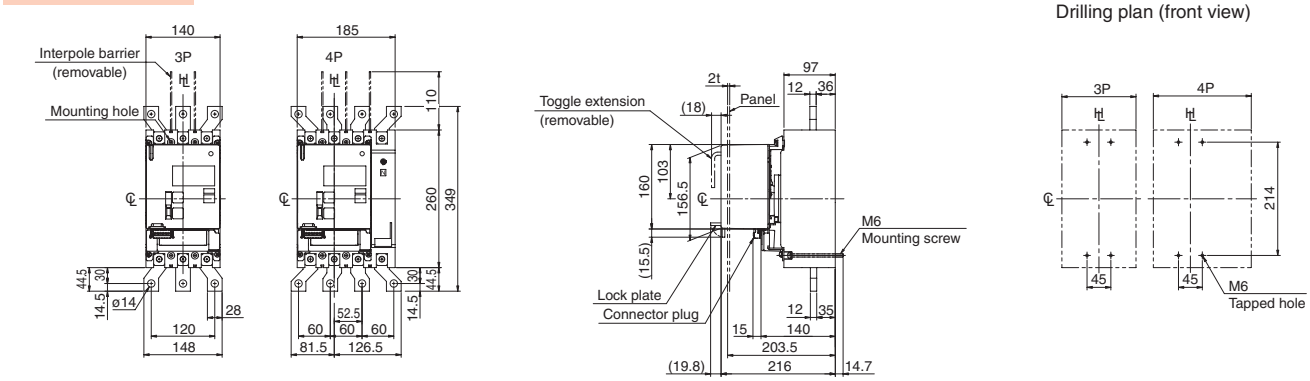

Rear-connected

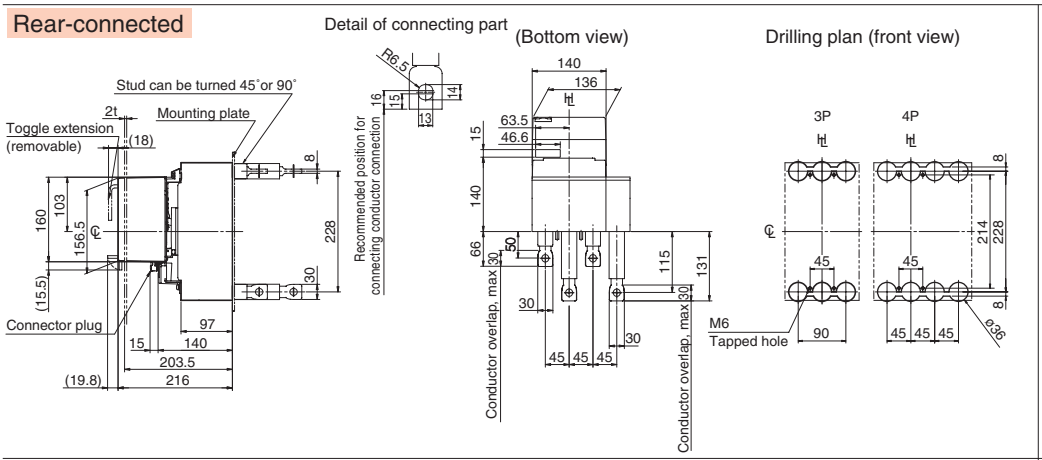

Panel cutout (front view)

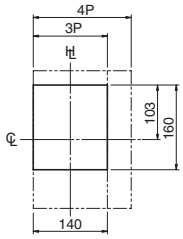

Panel cutout dimensions shown give an allowance of 1.5mm around motor operator.

Plug-in (Standard)

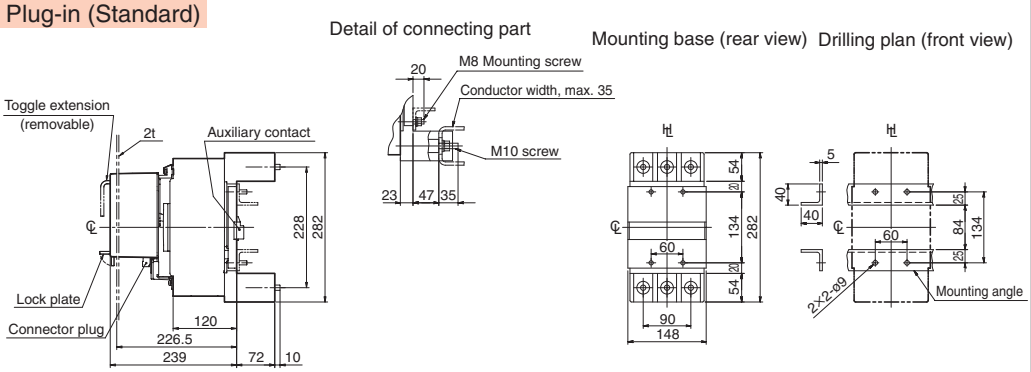

Panel hinge position (hatching area) (bottom view)

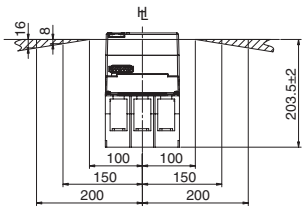

Plug-in (High-performance)

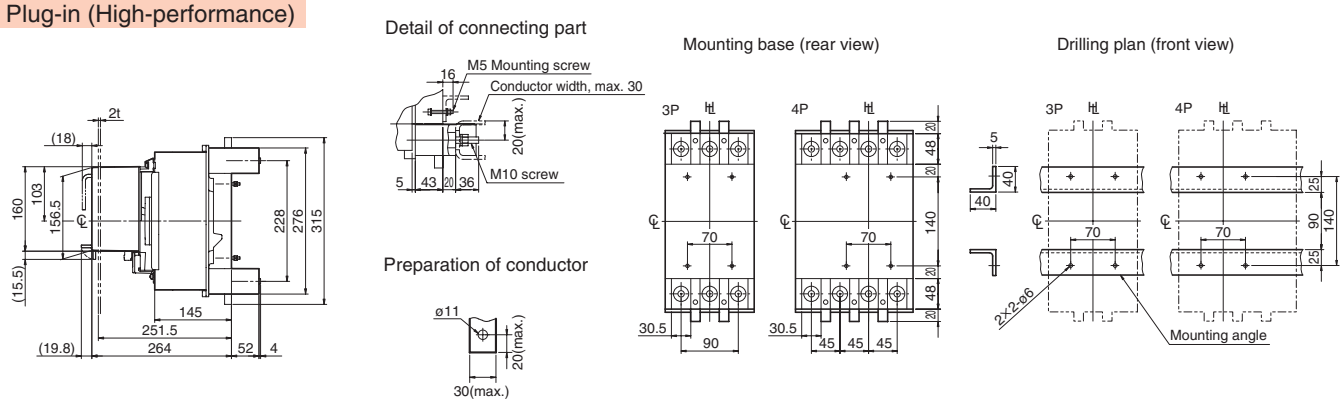

Note: Some connection methods and number of poles are not compatible depending on the model. See the outline drawing for each model for compatibility.

Outline dimensions (mm) (T2MC40) H400-NE, L400-NE

Front-connected

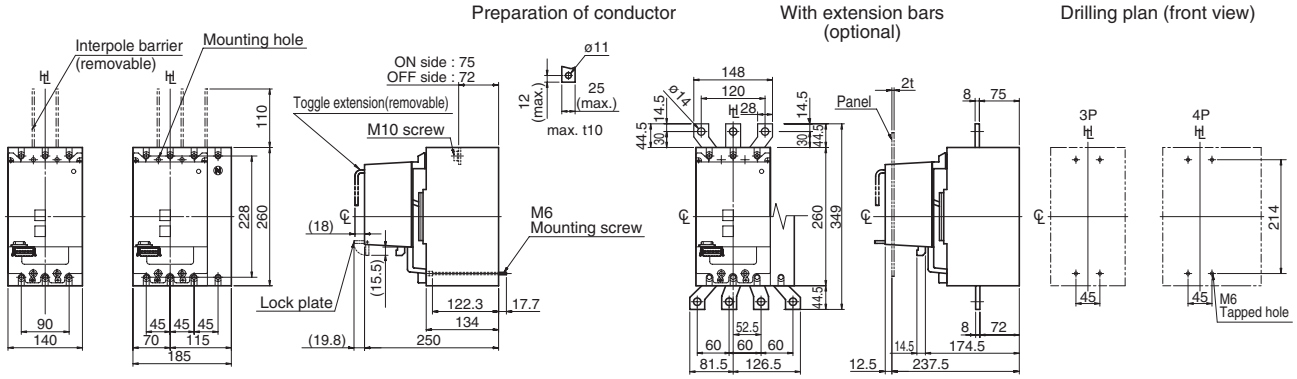

Rear-connected

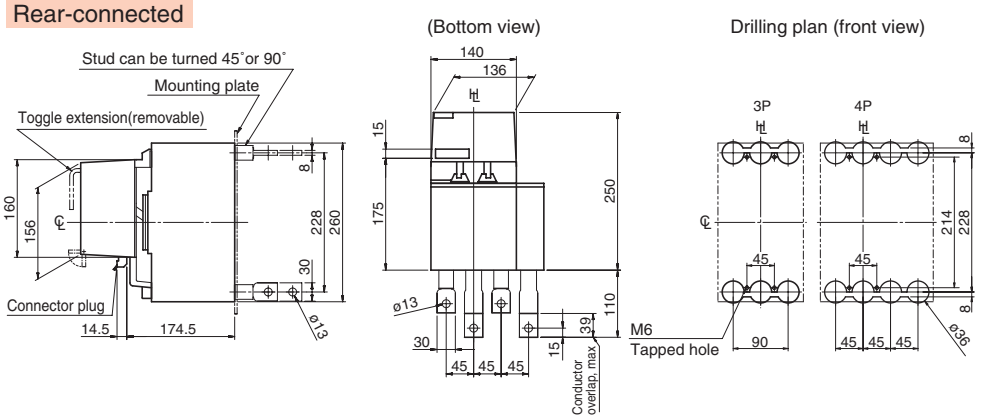

Note: Studs are factory installed in horizontal direction both on the line and load sides.

Panel cutout (front view)

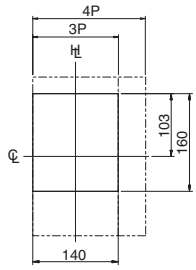

Panel cutout dimensions shown give an allowance of 1.5mm around motor operator.

Plug-in (Standard)

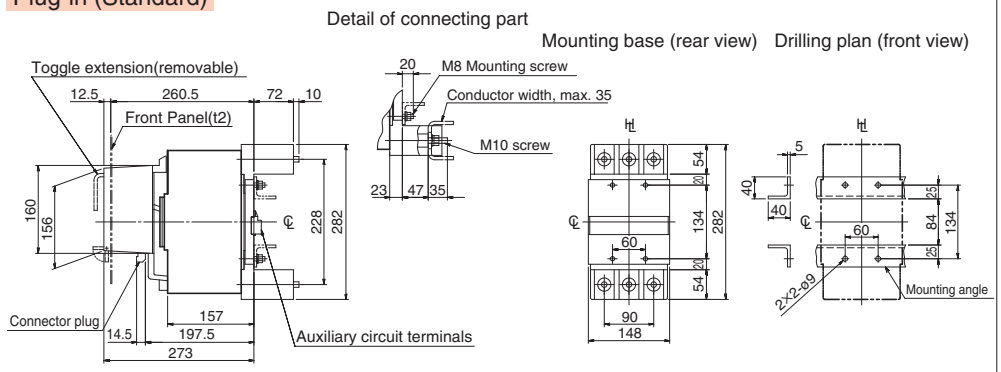

Panel hinge position (hatching area) (bottom view)

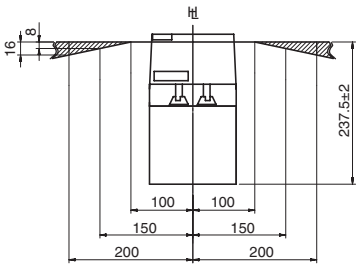

Plug-in (High-performance)

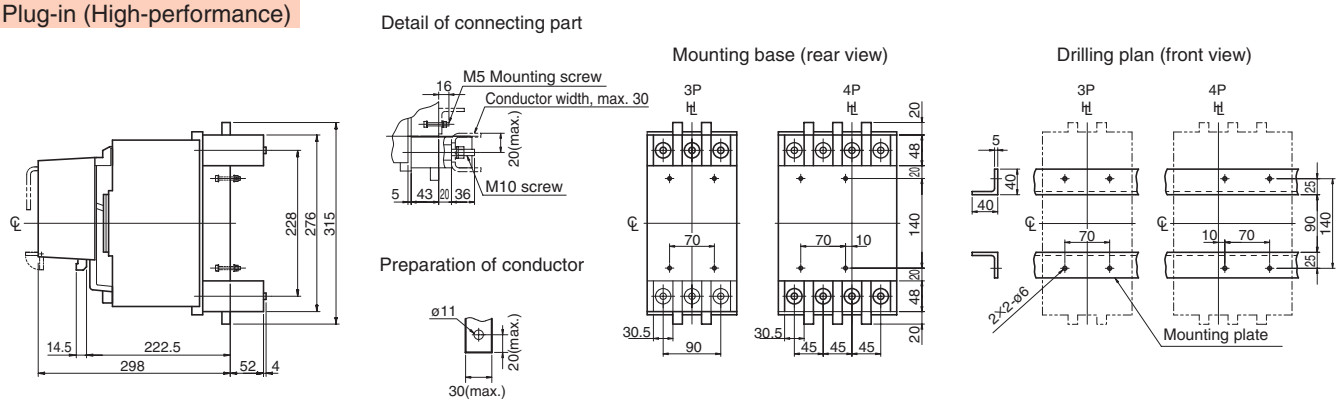

Circuit Breaker with motor operators

Outline dimensions (mm) (T2MC80) S630-CF/NF/NE/GN, ZAS630-CF/NF, NS630-NF, ZS630-CF/NF, S800-CF/NF/NE/RF/RE/PF/PE/NN, ZAS800-CF/NF, NS800-NF, ZS800-CF/NF

Front-connected

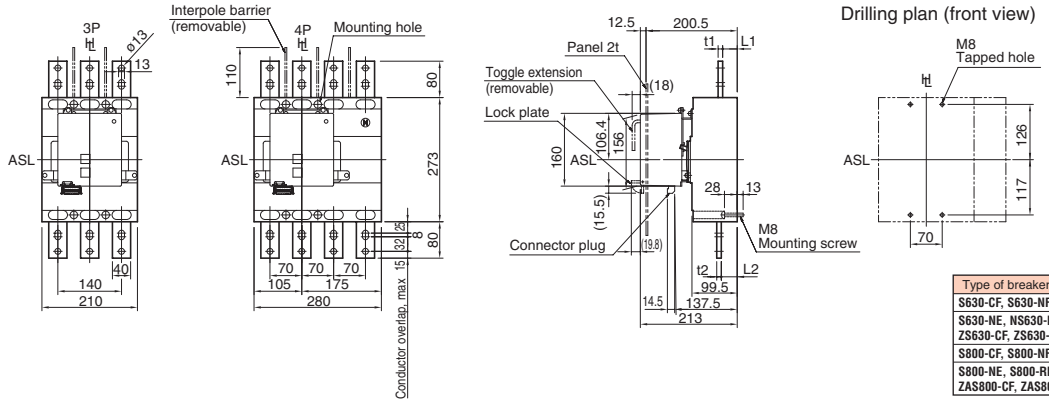

Type of breaker	t1	t2	L1	L2
S630-CF, S630-NF, S630-GN	8	8	32	34
S630-NE, NS630-NF, ZAS630-CF, ZAS630-NF, ZS630-CF, ZS630-NF	8	8	32	36
S800-CF, S800-NF, S800-RF, S800-PF, S800-NN	10	10	32	35
S800-NE, S800-RE, S800-PE, ZAS800-CF, ZAS800-NF, ZS800-CF, ZS800-NF	10	10	32	36

Rear-connected

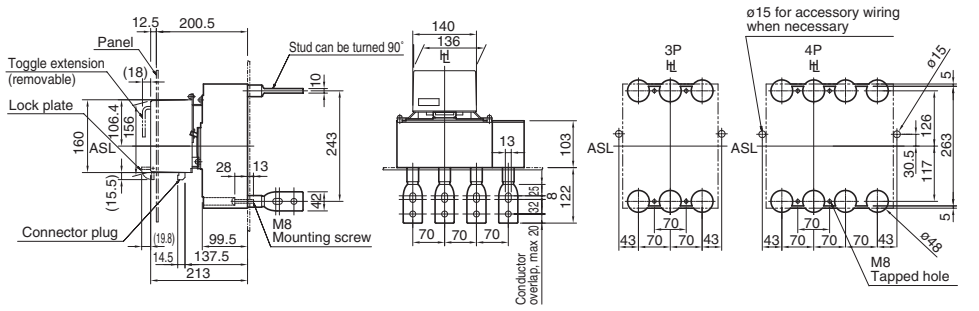

Note: Studs are factory installed in horizontal direction both on the line and load sides.

Panel cutout (front view)

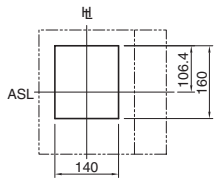

Panel cutout dimensions shown give an allowance of 1.5mm around motor operator.

Plug-in (Standard)

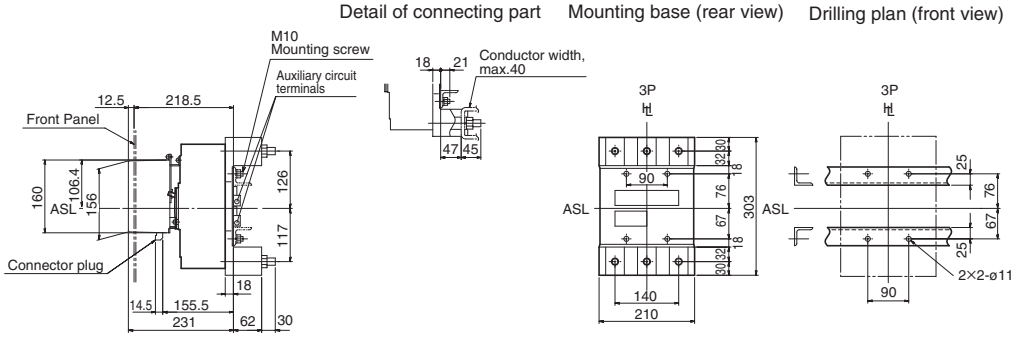

Panel hinge position (hatching area) (bottom view)

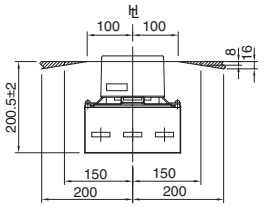

Plug-in(High-performance)

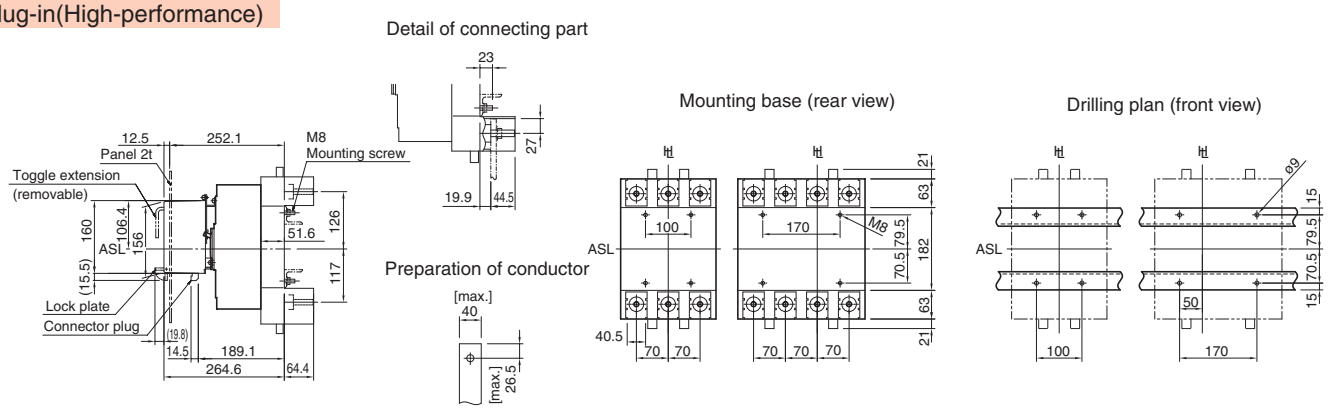

Notes ①: Some connection methods and number of poles are not compatible depending on the model. See the outline drawing for each model for compatibility.
②: When the motor operator is mounted, the test button, reset button, sensitivity selector switch, and operating time selector switch cannot be operated.

Outline dimensions (mm) (T2MC80) S1000-CE/NN

Front-connected

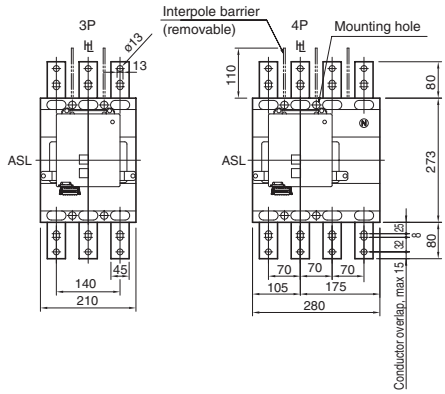

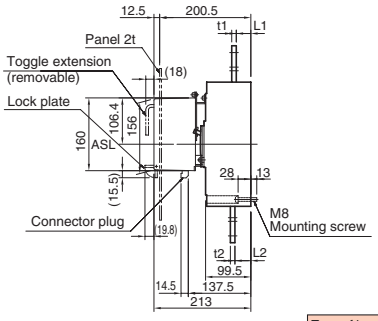

Drilling plan (front view)

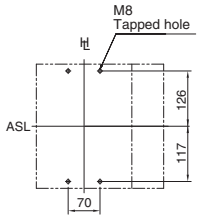

Type of breaker	t1	t2	L1	L2
S1000-CE S1000-NN	14	14	32	37

Rear-connected

(Bottom view)

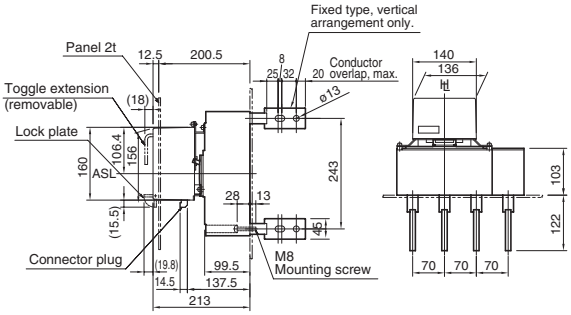

Drilling plan (front view)

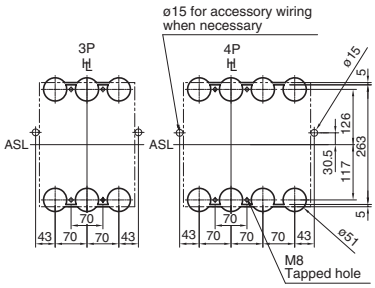

Panel cutout (front view)

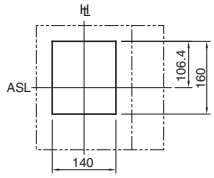

Panel cutout dimensions shown give an allowance of 1.5mm around motor operator.

Panel hinge position (hatching area) (bottom view)

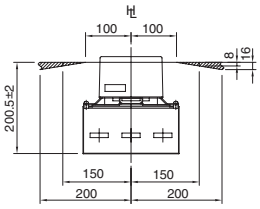

Circuit Breaker with motor operators

Outline dimensions (mm) (T2MC80) H630-NE, L630-NE

Front-connected

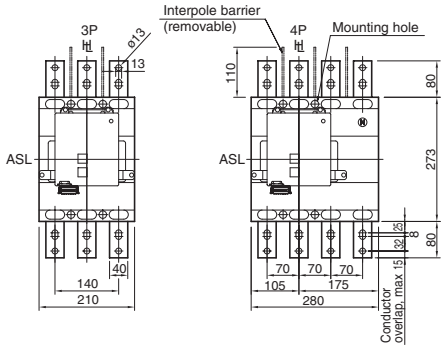

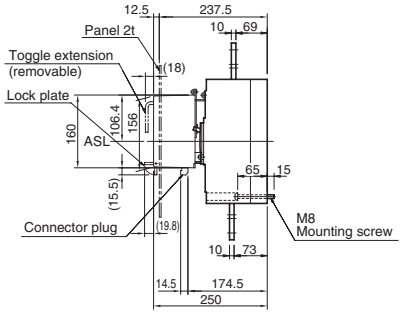

Drilling plan (front view)

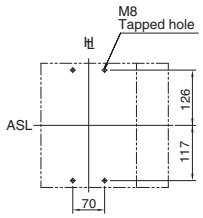

Rear-connected

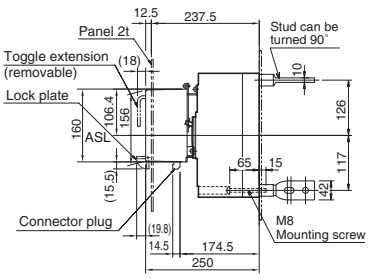

(Bottom view)

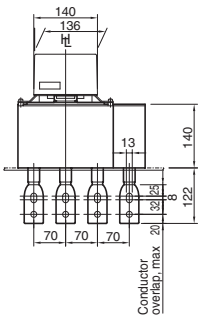

Drilling plan (front view)

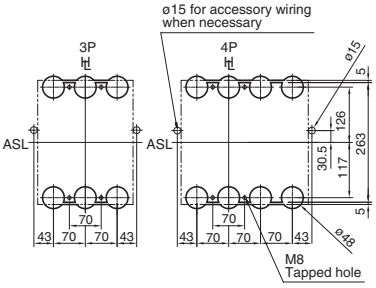

Note: Studs are factory installed in horizontal direction both on the line and load sides.

Panel cutout (front view)

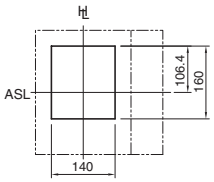

Panel cutout dimensions shown give an allowance of 1.5mm around motor operator.

Plug-in (Standard)

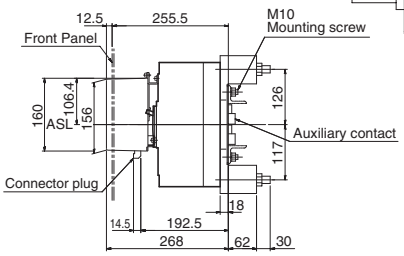

Detail of connecting part

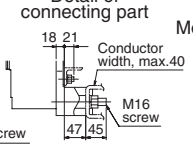

Mounting base (rear view)

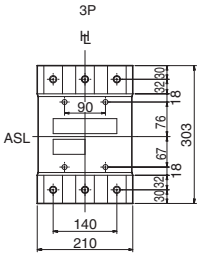

Drilling plan (front view)

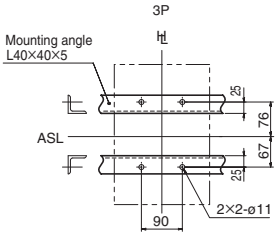

Panel hinge position (hatching area) (bottom view)

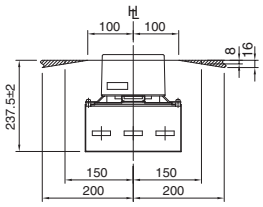

Plug-in (High-performance)

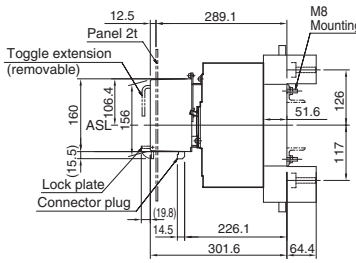

Detail of connecting part

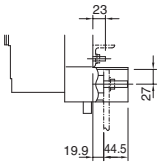

Preparation of conductor

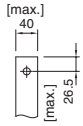

Mounting base (rear view)

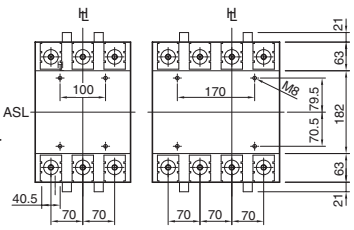

Drilling plan (front view)

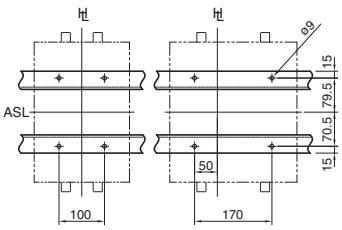

Outline dimensions (mm) (T2MC80) H800-NE, L800-NE

Front-connected

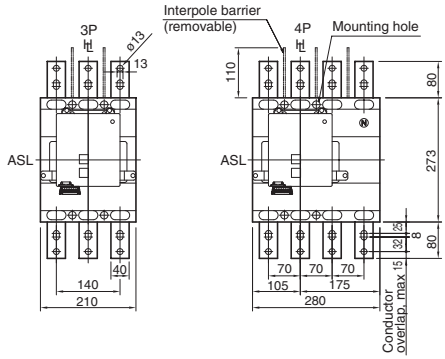

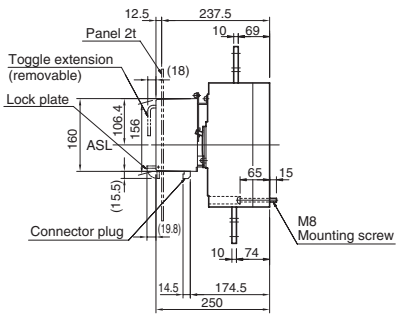

Drilling plan (front view)

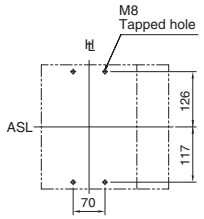

Rear-connected

(Bottom view)

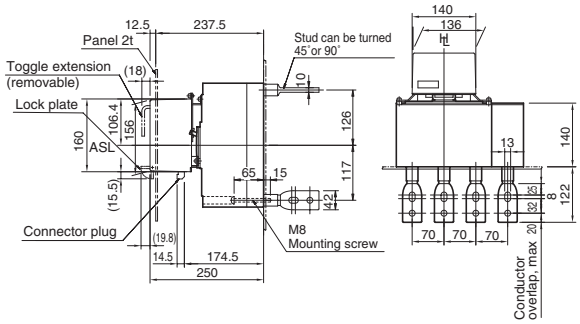

Drilling plan (front view)

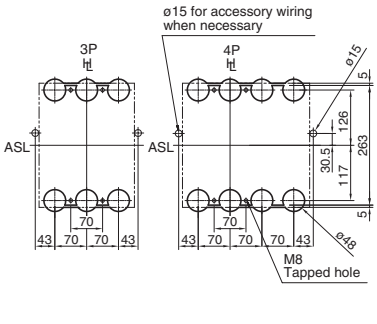

Panel cutout (front view)

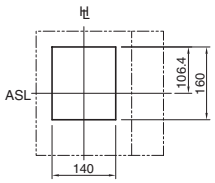

Panel cutout dimensions shown give an allowance of 1.5mm around motor operator.

Note: Studs are factory installed in horizontal direction both on the line and load sides.

Plug-in (Standard)

Detail of connecting part

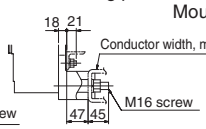

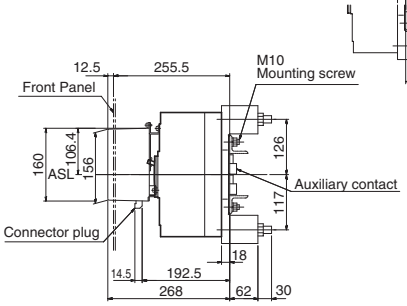

Mounting base (rear view)

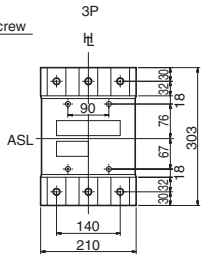

Drilling plan (front view)

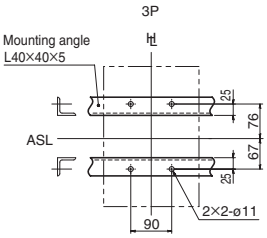

Panel hinge position (hatching area) (bottom view)

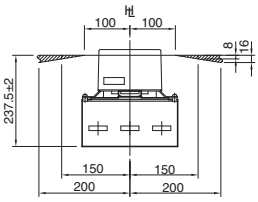

Plug-in (High-performance)

Detail of connecting part

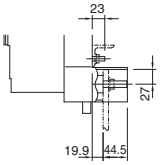

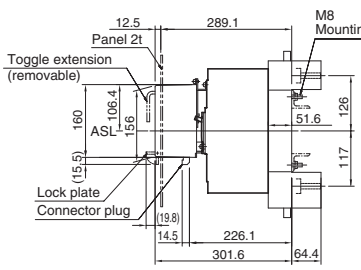

Preparation of conductor

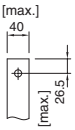

Mounting base (rear view)

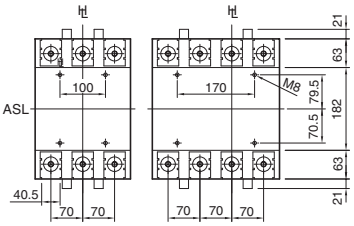

Drilling plan (front view)

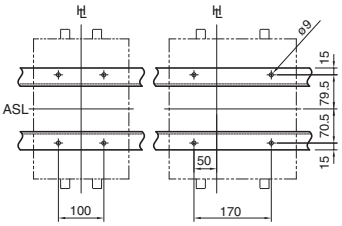

Circuit Breaker with motor operators

Outline dimensions (mm) (T2MCX6) S1250-NE/GE/NN

Front-connected

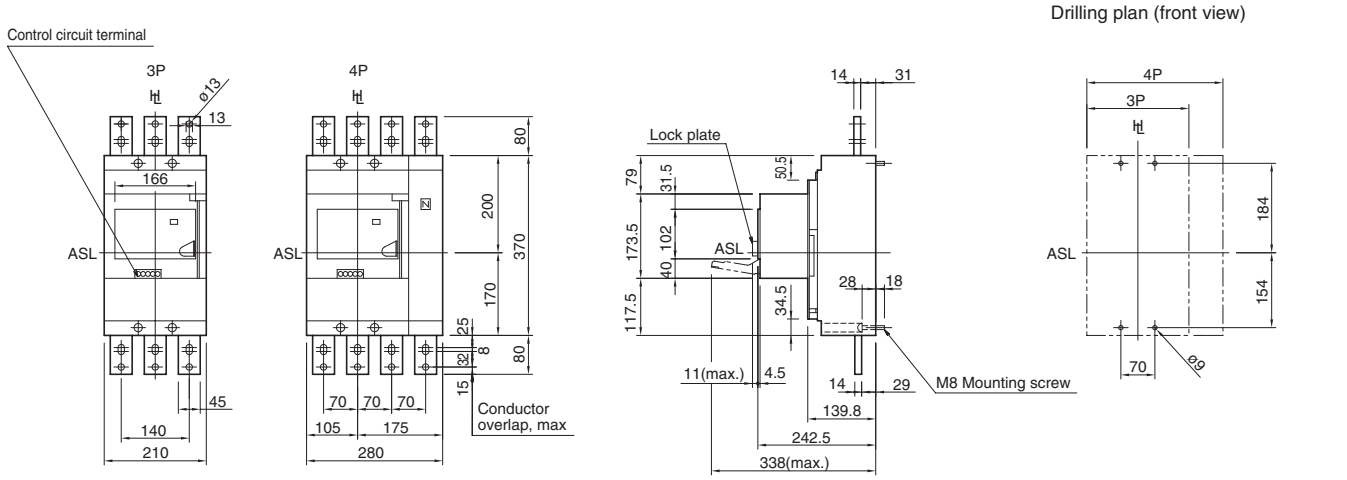

Rear-connected

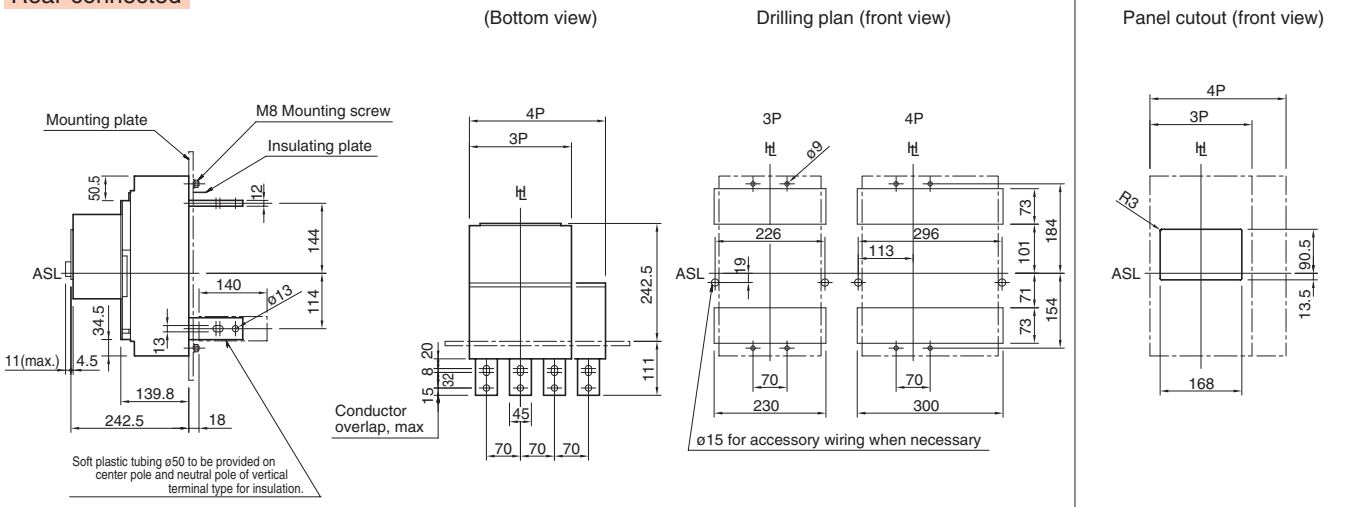

Note: Studs are factory installed in horizontal direction both on the line and load sides.

Panel cutout dimensions shown give an allowance of 1.0mm around motor operator.

Plug-in (Standard)

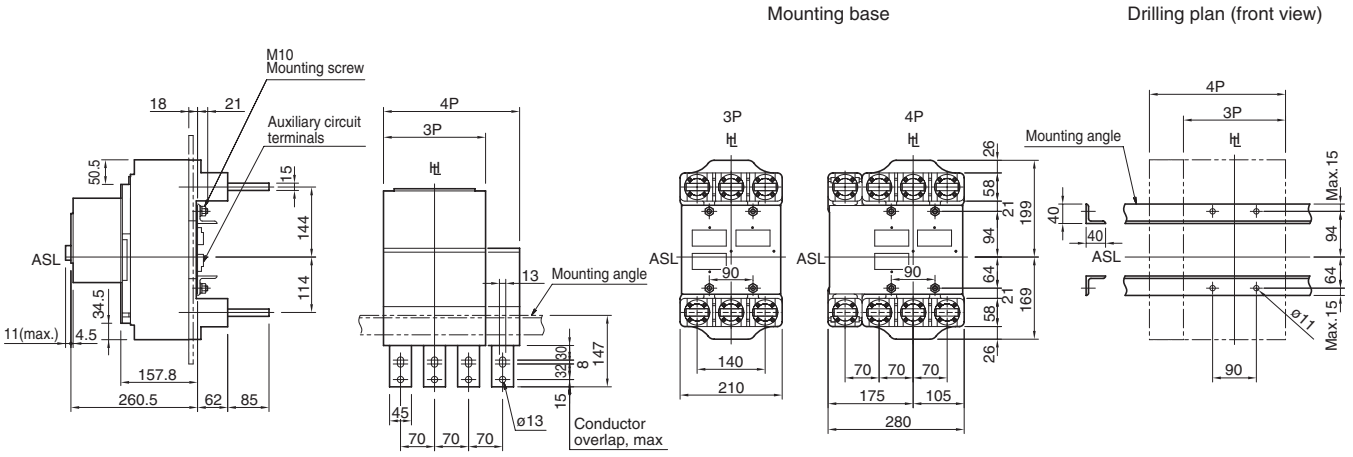

Outline dimensions (mm) (XMD9) TL-1000NE, TL-1200NE

Front-connected

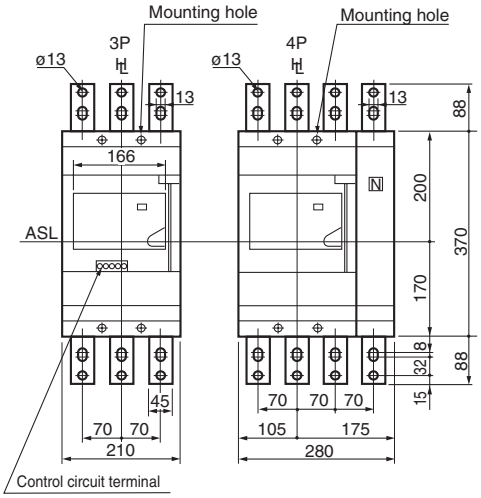

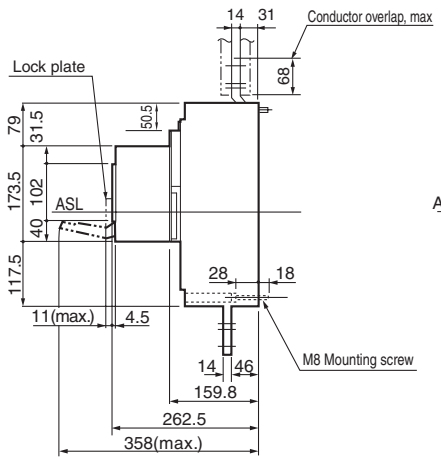

Drilling plan (front view)

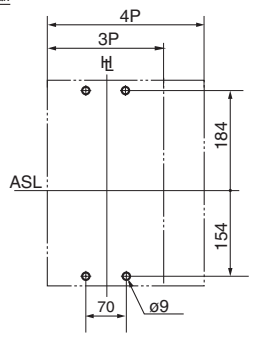

Rear-connected

(Bottom view)

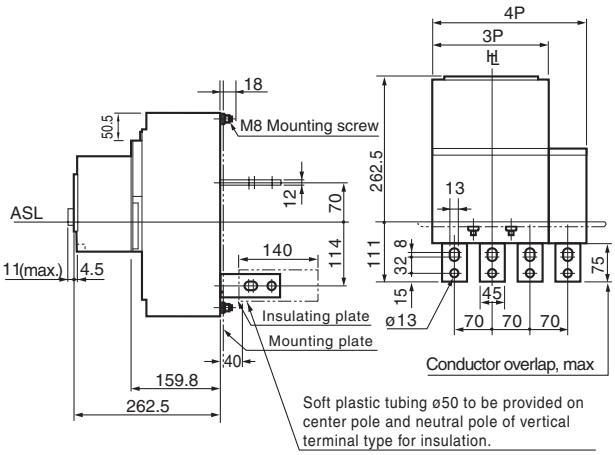

Drilling plan (front view)

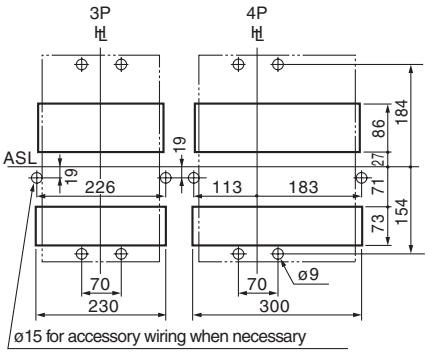

Panel cutout (front view)

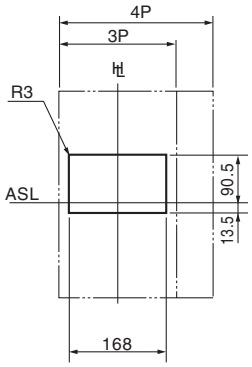

Note: Studs are factory installed in horizontal direction both on the line and load sides.

Panel cutout dimensions shown give an allowance of 1.0mm around motor operator.

Plug-in (Standard)

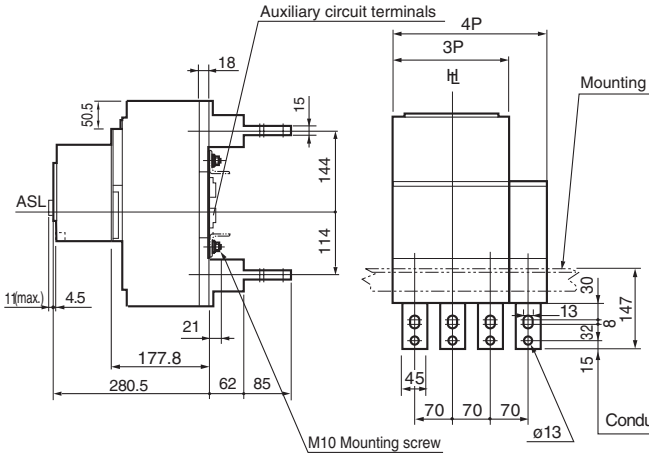

Mounting base (XDM8 Type)

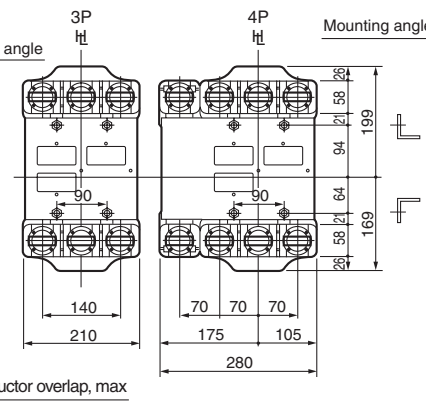

Drilling plan (front view)

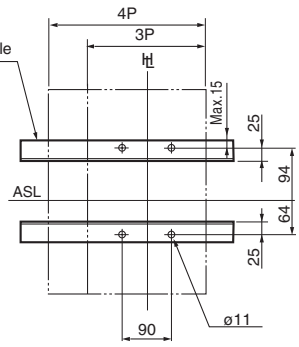

7

Characteristics and Outline Dimensions

Outline dimensions (mm) (T2MCX6) S1600-NE/NN

Front-connected

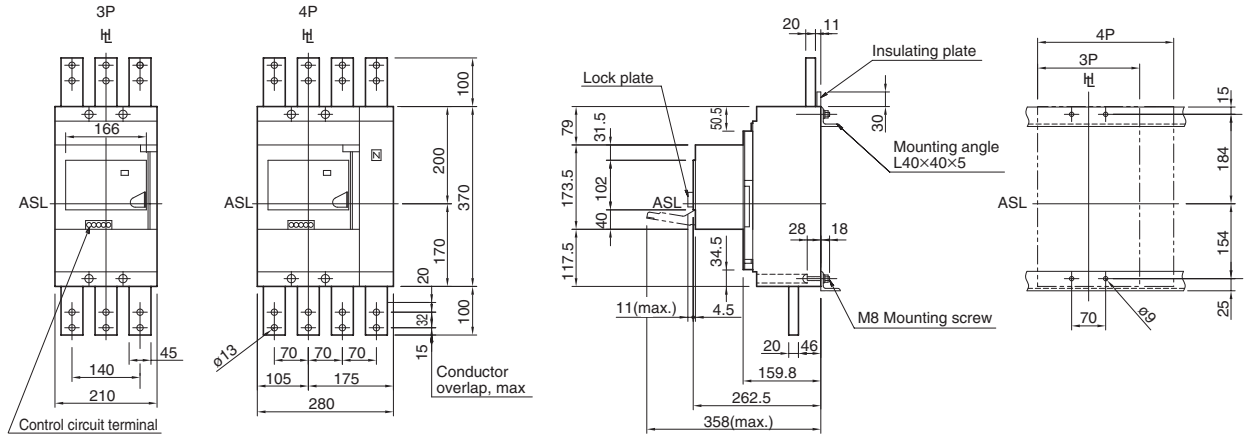

Rear-connected

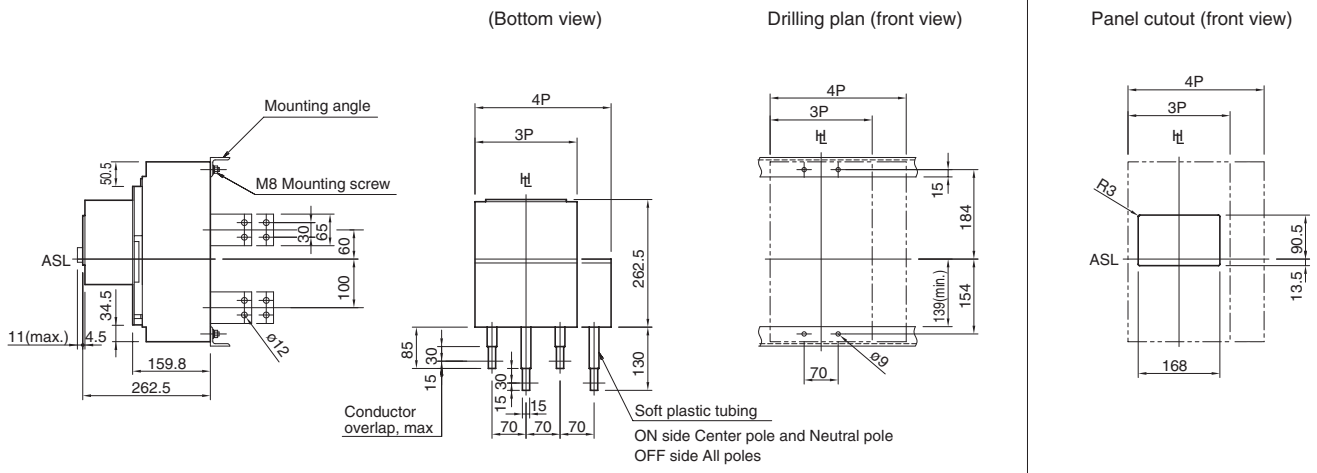

Panel cutout dimensions shown give an allowance of 1.0mm around motor operator.

Draw-out

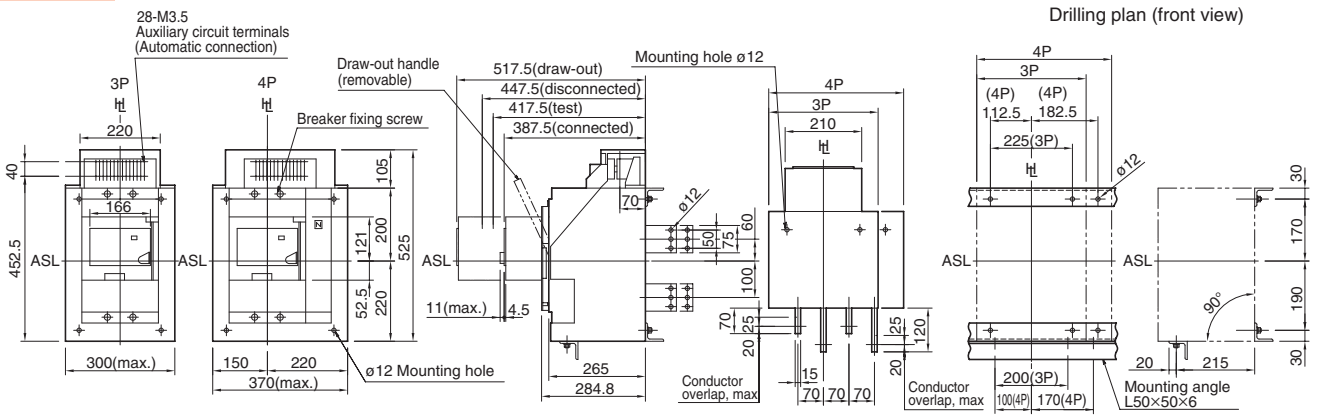

* Contact TERASAKI if manual connection is required.
The external dimensions are different.

8 Handling and maintenance

1 Transportation and storage 8-2
2 Environmental operating conditions 8-2
3 Installation and connection 8-2
4 Maintenance and inspection 8-4

8 Handling and maintenance

1 Transportation and storage 2 Environmental operating conditions 3 Installation and connection

1 Transportation and storage

■ Storage Precautions

- **Avoid corrosive gases:**
  Do not leave the breakers in an atmosphere of hydrogen sulfide or ammonia gas.
- **Avoid humidity:**
  Do not leave the breakers in high humidity for a long period. Keep it free from condensation.
- **Avoid direct sunlight:**
  Do not expose the breakers to direct sunlight for a long period.
- **Avoid dust:**
  Keep the breakers in the ON position and covered against dust during storage.
- **Storage temperature:** –25 to +60°C

■ Transportation Precautions

- **Handle and transport with care:**

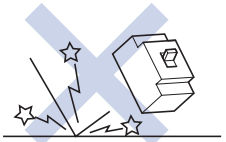

Do not drop the breakers during transportation.
Carefully pack the breakers before transportation.
Take due measures against moisture and gas absorption of the breakers during long transportation.

- **Hold by the breaker body:**

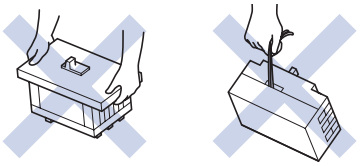

Be sure to hold the breaker by its body during handling and transportation.
Holding the breaker by a lead wire, terminal cover, stud or flush plate may result in the breaker being dropped, damaged and/or failed.

2 Environmental operating conditions

Use the breakers in the following environmental conditions:

Ambient temperature	Within the range of –10°C to 40°C. When using in high temperature conditions exceeding 40°C, reduce the current used. However, the average value over 24 hours should not exceed 35°C. 50°C……Approx. 90% 60°C……Approx. 70%
Humidity	85% or less, no condensation
Vibration/Shock	No unusual vibration and mechanical shock
Altitude	2,000 m max
Atmosphere	No excessive water vapor, smoke, oil vapor, dust, salt or corrosive substances. No sudden change in temperature. Non-condensing

Note) When using the device in an environment other than as described above, please use a circuit breaker for special environments (see page 4-29)

3 Installation and connection

■ Installation Precautions

- **Avoid direct sunlight:**

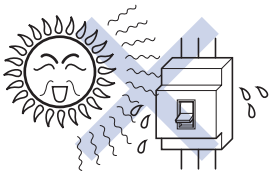

Install the breakers in an area that is not exposed to direct sunlight.
Otherwise, the breakers may malfunction due to a temperature rise.

- **Avoid vibration and shock:**

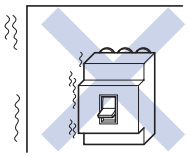

If installing the breakers in an area that is exposed to vibration or shock, use cushions to relieve vibration or shock applied to the breakers.

- **Avoid dust and chippings:**

Take measures so that the breakers are not directly exposed to rainwater, oil, dust or chippings. Pay special attention to electrically conducive particles such as iron chippings that can enter the breakers. House the breakers in enclosures during use.

- **Do not block the arc gas exhaust ports:**

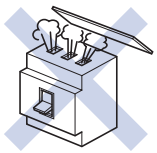

Do not block the arc gas exhaust ports. Doing so may deteriorate the breaking capacity. Ensure due insulation distance (arc space) between current carrying parts and grounded metal members in the vicinity of the exhaust ports. See page 5-18 for instructions regarding insulation distance.

- **Do not remove the back cover:**

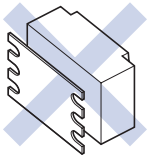

Do not remove the base back cover or thread locking compound.

- **Pay attention to the mounting angle:**

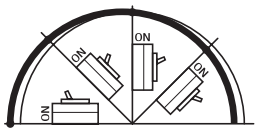

When using a hydraulic-magnetic type overcurrent trip mechanism, the overcurrent tripping performance will vary depending on the mounting position, so pay attention to the mounting angle. It is recommended to use hydraulic-magnetic type overcurrent trip mechanisms in a vertical orientation. See page 5-21 for correction of rated current depending on mounting angle.

■ Connection Precautions

• Tighten to a proper torque:

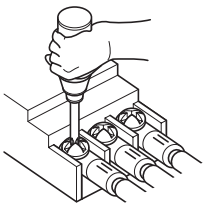

Undertightening terminal screws may result in overheat or malfunction and overtightening in damage to the mold. Tighten the screws to the specified torques. See pages 5-14 to 5-17 for proper tightening torques. Use screwdrivers suited to the size and type of screws.

• Never lubricate threads:

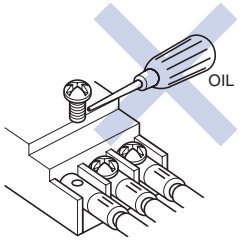

Do not lubricate screw threads. Doing so will decrease the frictional resistance, resulting in looseness and overheat.

• Insulate exposed live parts:

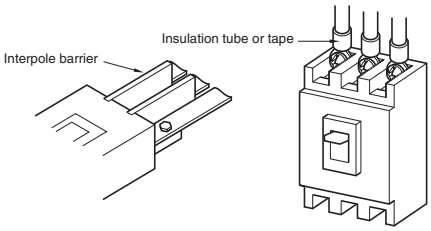

Electrically and positively insulate bare live parts of front-connected breakers using interpole barriers, terminal covers, insulation tube and/or insulation tape.

• Do not deform studs:

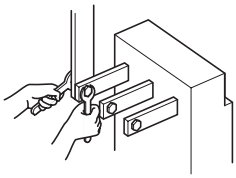

Tighten the conductor connections of rear-connected or plug-in breakers so that the studs do not suffer deformation due to excessive force.

• Normal connection of power supply and load is preferable:

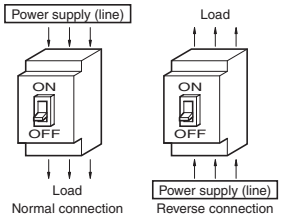

It is preferable in principle that the breaker is in normal connection. If reverse connection is necessary, refer to page 5-23.

• Connecting Earth Leakage Circuit Breakers and Circuit Breakers with Earth Leakage Alarm

• Connecting to single-phase 3-wire circuits

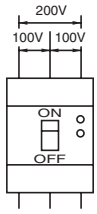

When applying 3-pole type to a single-phase 3-wire circuit, apply voltage to both ends and connect the neutral wire to the central pole.

• Connecting to single-phase 2-wire circuits

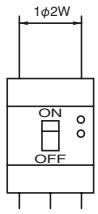

When applying 3-pole type to a single-phase 2-wire circuit, use both ends and do not use the central pole.

• Parallel connection

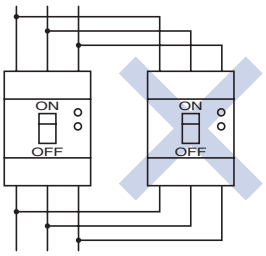

If you connect an earth leakage circuit breaker in parallel, an unbalanced current will flow, a malfunction will occur, and the tripping coil may burn out. Therefore, never connect in parallel. (Moulded case circuit breakers and earth leakage circuit breakers/circuit breakers with earth leakage alarm must also never be connected in parallel.)

• Firmly secure pole conductors in parallel with each other:

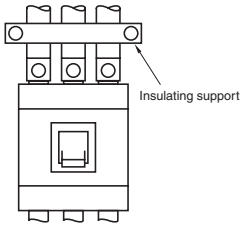

Install connecting conductors so that they are in parallel with each other. Firmly secure or tie the conductors by insulating support in case they are acted upon by an electromagnetic force, the strength of which depends on the magnitude of fault current. See the table to the right.

Electromagnetic force acted per meter of conductor

Conventional rated current kA (Power factor)	Electromagnetic force (three-phase short-circuit) N	
	Conductor clearance: 10 cm	Conductor clearance: 20 cm
10 (0.4)	490	245
18 (0.3)	1880	940
25 (0.2)	4430	2215
35 (0.2)	8690	4345
42 (0.2)	12520	6260
50 (0.2)	17740	8870
65 (0.2)	29980	14990
85 (0.2)	51270	25635
100 (0.2)	70960	35480
125 (0.2)	110870	55435

1. Initial inspection

After installing the breakers, inspect them according to the table shown below before energizing them for the first time. Make sure that the breakers are not energized before starting the inspection.

Check item	Criterion
1. Packing material debris, iron chippings, electrical wire debris or other electrically conductive foreign matter	Must have been completely removed.
2. Cracks of or damage to the cover and base	Must not have occurred.
3. Terminal screws and conductor clamping screws	Must have been tightened to the torques specified on pages 5-14 to 5-17.
4. Insulation resistance See the following precautions regarding earth leakage circuit breakers/circuit breakers with earth leakage alarm.	Must be 5 megohms or higher when measured with a 500V insulation resistance tester.
5. Rated voltage and circuit voltage	Must be identical or within the permitted range.
6. Apply the circuit voltage and press the test button to check the trip operation. (Earth leakage circuit breakers)	Check that earth leakage trip occurs.

Caution

Do not apply a voltage to the wrong place or apply voltage that exceeds the standard. Doing so may cause failure.

■ Test voltage for withstand voltage test

Perform the dielectric withstand test according to the table shown below. Make sure that the test voltage does not exceed the upper limits specified in the table.

(Units in voltage)

Main circuit		Auxiliary or control circuit (Note 1)	
Rated insulation voltage (Note 3)	Test voltage (ac rms)	Rated insulation voltage of operating circuit	Test voltage (ac rms)
Ui≤300	2000	Uis≤60	1000 (Note 2)
300<Ui≤690	2500	60<Uis≤690	2Uis+1000 (1500 min)

Notes: 1. Between terminal group and ground only
2. Isolate 24V DC motors from the control circuit. Dielectric withstand voltage: 500V AC or 1000V AC
3. If the rated insulation voltage is not described in this catalogue, use the maximum rated voltage.

■ Products with no electronic circuit connected to the main circuit left and right poles

(Moulded case circuit breakers)

Measurement points \ Test		Insulation resistance measurement (Note 1)		Withstand voltage test	
Toggle condition		ON	OFF	ON	OFF
Between main circuit live part and ground		○	○	○	○
Between different poles	Line side	○	○	○	○
	Load side	○	○	○	○
Between power supply and load terminals		—	○	—	○
Between operation circuit live part and ground		○	○	○	○

(Note 1) Use a 500 V insulation resistance tester.

■ Products with an electronic circuit connected to the main circuit left and right poles

(Earth leakage circuit breakers/circuit breakers with earth leakage alarm/Single phase 3-wire circuit breakers with neutral phase open protection/Single phase 3-wire earth leakage circuit breakers with neutral phase open protection)

Measurement points \ Test		Insulation resistance measurement (Note 1)		Withstand voltage test(Note 3)	
Toggle condition		ON	OFF	ON	OFF
Between main circuit live part and ground		○	○	○(note 5)	○(note 5)
Between left - centre (RS), centre - right (ST) poles	Line side	○(note 4)	○	○(note 4)	○
	Load side	○(note 4)	○(note 4)	○(note 4)	○(note 4)
Between left - right (RT) poles	Line side	×	○	×	○
	Load side	×	×(note 2)	×	×
Between power supply and load terminals		—	○	—	○
Between operation circuit live part and ground		○	○	○	○

(Note 1) Use a 500 V insulation resistance tester.
Do not measure between the left and right poles. They will not be damaged even if you make the wrong measurement, but they will be damaged if 1000 V is applied. The resistance value is almost zero (Ω).
(Note 2) You can perform the measurement if a Megger test switch MG (page 6-15) is mounted.
(Note 3) If you mistakenly apply the test voltage to the × mark in the table, replace with a new one.
(Note 4) For single phase 3-wire circuit breaker with neutral phase open protection and single phase 3-wire earth leakage circuit breaker with neutral phase open protection, remove the overvoltage detection lead from the neutral wire. Failure to do so may cause failure.
(Note 5) When performing a withstand voltage test between each pole of the main circuit live part and ground with the load wiring connected to the circuit breaker, perform the test between the main circuit live parts collectively and ground. Excessive voltage is applied between the poles via the capacitance to ground of the wiring and the impedance connected to ground (surge capacitor, arrester, noise filter, etc.), and there is a risk of failure.

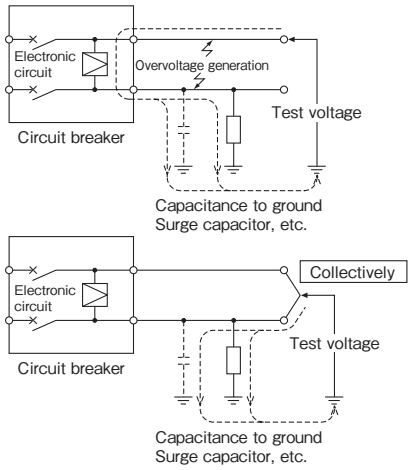

2. Periodic Inspection

Periodic inspection is needed to maintain the optimum performance of the breakers and prevent malfunctions. Perform the first inspection one month after the system is put into commission and subsequently, at periodic intervals depending on the operating conditions.

■ Guidelines for inspection intervals

Operating conditions		Installation location	Examples	Guidelines for inspection intervals
Typical	1	Where the ambient air is always clean and dry.	Dustproof and air-conditioned electrical installation rooms	Every 2 or 3 years before 10 years since installation Every year after 10 years since installation Every 6 months after 15 years since installation
	2	Indoors where dust is low and corrosive gases are not present.	Switchboards or enclosures in electrical installation rooms not dustproof nor air-conditioned	Every year before 10 years since installation Every 6 months after 10 years since installation Every month after 15 years since installation
Harsh	1	Where sulfur dioxide, hydrogen sulfide, chloride and/or high-humidity gases are present and dust is low.	Geothermal power plants, sewage treatment plants, steel making plants, paper making plants or pulp making plants	Every 6 months before 5 years since installation Every month after 5 years since installation
	2	Where dust and/or corrosive gases are severe, making it impossible for people to stay in for a long time.	Chemical plants, quarries or mines.	Every month

■ Check items

Make sure that the breakers are not energized before starting the inspection.

Check item	Criterion	Remedy
1. Terminal screws	Must not be loosened.	If loosened, retighten to the torque specified on pages 5-14 to 5-17.
2. Terminals and their vicinities	Must be free of dust and oil.	If not, clean with a cleaner. Wipe with a clean cloth.
3. Cracks of or damage to the cover and base	Must not have occurred.	If cracks or damage is found, replace.
4. Operating mechanism	Must work smoothly.	If not, replace or contact us.
5. Tripping mechanism	Must trip smoothly and ability reset operation after tripping opration.	If not, replace or contact us.
6. Discoloration or overheat signs of terminals and/or base	Must not be present by visual inspection.	If present, replace. (Discoloration of silver coating to a certain degree proves no problem).
7. Insulation resistance	Must be 5 megohms or higher when measured with a 500V insulation resistance tester.	If not, replace.
8. Press the test button about once a month with voltage applied to check the trip operation. (Earth leakage circuit breakers)	Operates properly and can reclose.	If there is an operational defect, replace with a new item.(Note: If there is an operational defect, do not press and hold the test button for 5 seconds or more.)

3. Inspection and treatment after fault current breaking

If the circuit breaker operates to prevent a fault current, determine whether it can be reused or must be replaced with a new unit depending on the size of the fault current.

1. If the arc gas outlet is clean and no other abnormalities are found, it can be reused.
2. If you find black soot stains on the arc gas outlet, it is acceptable to determine that it can be reused if the insulation resistance is 5 MΩ or higher. However, pay attention to whether there is any abnormal temperature rise at the terminals, etc. while the power is on, or any other abnormalities.
   If the insulation resistance is 5 MΩ or less, perform a withstand voltage test. If it meets the specified dielectric strength, reduce the load as much as possible, only use for a short time while making sure that there is no abnormal temperature rise at the terminals, etc., and replace it with a new unit as soon as possible.
   • Measure the insulation resistance and withstand voltage test according to page 8-4.
   • In the case of an earth leakage circuit breaker, also check the trip operation with the test button.
3. If the toggle and arc gas outlet are significantly dirty with soot, and metal molten particles can be seen, replace it with a new unit.

4. Troubleshooting guide

Take an appropriate action according to the following table when a trouble occurs:

■ Troubles in breakers

Category	Symptom	Possible cause	Remedy/Action
Overheat	○Overheat of terminals ○Burnout of terminal insulation	○Looseness of terminal screws or conductor clamping screws	○Retighten.
		○Increase in contact resistance of contactors ○Contact failure between stud conductor and terminal (due to looseness of screws or foreign matter)	○Replace.
	○Overheat (exceeding 70°C) of breaker molded case	○Increase in contact resistance of contactors ○Looseness of interior parts ○Increase in current density due to disconnection of braided wire	○Replace.
		○High-frequency distortion of load current	○Improve distortion factor.
Continuity failure	○Abnormal voltage on load side	○Excessive wear of contactors ○Foreign matter between contactors ○Damage to current carrying parts (due to excessively frequent switching or corrosive gases)	○Replace.
Inoperativeness	○Closing not allowed	○Breaker is kept in tripped state, i.e., is not reset.	○Reset.
	○Resetting not allowed	○UVT is not excited.	○Energize.
		○Bimetal is not enough cooled after tripping due to overcurrent.	○Cool down before resetting.
		○Bimetal is deformed e.g. by corrosion. ○Admissible number of operation cycles is exceeded and service life has expired. (SHT or UVT was frequently used for tripping). ○Mechanical failure	○Replace.
Nuisance tripping	○Tripping occurring while rated current is still not reached	○Ambient temperature too high (exceeding 40°C)	○Reduce ambient temperature e.g. through ventilation.
		○Overheat due to looseness of terminal screws	○Retighten.
		○Overheat of interior parts	○Replace.
		○Vibration and/or shock	○Use cushions or the like to dampen vibration and shock.
		○Incompatible frequency (for thermal-magnetic breakers with CT)	○Replace to match frequency.
		○High-frequency distortion of load current	○Reduce load current or change rated current.
		○Conductor size smaller than specified	○Use larger size conductors or change rated current.
		○Inductive noise enters due to a large current busbar nearby (for earth leakage circuit breaker)	○Isolate noise source.
		○Electromagnetic-induced noise (for earth leakage circuit breakers · electronic circuit breakers)	○Isolate noise source. (Electric field strength 10 V/m or less)
		○Excessive surge (for earth leakage circuit breakers · electronic circuit breakers)	○Isolate surge source.
	○Tripping due to starting current	○Inrush starting current ○Switching operation of star-delta starter ○Start of inching (resulting in instantaneous tripping) ○Instantly trips and operates due to capacitor charging current, incandescent lamp overcurrent, fluorescent lamp starting current, etc.	○Change instantaneous trip pickup current or replace with breaker having larger rated current.
		○Starting current too high (resulting in long-delayed tripping) ○Starting time too long (resulting in long-delayed tripping)	○Replace with breaker having larger rated current.
		○Short-circuit in motor	○Repair or replace motor.
		○Erroneous connection of control circuit for SHT or UVT	○Check connection.
No response to overcurrent	○No tripping at trip pickup current	○Failure in coordination with an upstream current-limiting fuse or breaker	○Review coordination.
		○Ambient temperature too low	○Check compensation current.
		○Incompatible frequency	○Match frequency.

■ Troubles in accessories

Category	Symptom	Possible cause	Remedy/Action
Failure of accessories	○Failure of motor operator	○Wiring mistakes in control circuit ○ Continuous on/off operations due to wiring mistakes in control circuit	○Check and correct wiring.
		○Voltage drop due to insufficient capacity of power supply cable	○Use larger size cable.
		○Insufficient power supply capacity of control circuit	○Increase power supply capacity.
		○Closing/opening/resetting not allowed due to improper stroke adjustment of operation mechanism	○Return to Terasaki for stroke readjustment.
	○Failure of SHT	○Supply-voltage drop due to insufficient current carrying capacity of control circuit ○Supply-voltage drop due to insufficient power supply capacity.	○Increase current carrying capacity. ○Increase power supply capacity.
		○Coil burnout due to continuous excitations, improper coil ratings, failure or fusion of anti-burnout contacts, etc.	○Return to Terasaki or replace.
	○Failure of UVT	○Not tripped even if no voltage due to remanence ○Not tripped even if no voltage due to improper stroke adjustment	○Repair or replace.
	○Failure of auxiliary and/or alarm switches	○Fusion or burnout of microswitch contacts due to their improper ratings	○Return to Terasaki or replace. Load to microswitch contacts will be relieved e.g through auxiliary relays.
		○Improper adjustment of microswitches	○Return to Terasaki for repair.

5. Operational performance capability

The operation durability of circuit breakers depends on their frame size. The larger the frame size is, the lower the operation durability is.
IEC 60947-2 specifies the operation durability of circuit breakers as shown in the table below. It must be kept in mind that circuit breakers are a protection tool and unlike electromagnetic relays, are not intended for frequent switching operation.

Number of operating cycles

1	2	3	4	5
Rated current, A (Note 1)	Number of operating cycles per hour (Note 2)	Number of operating cycles		
		Without current	With current (Note 3)	Total
$I_n \leq 100$	120	8500	1500	10000
$100 < I_n \leq 315$	120	7000	1000	8000
$315 < I_n \leq 630$	60	4000	1000	5000
$630 < I_n \leq 2500$	20	2500	500	3000
$2500 < I_n$	10	1500	500	2000

Notes: 1. This means the maximum rated current for a given frame size.
2. Column 2 gives the minimum operating rate. This rate may be increased with the consent of the manufacturer; in this case the rate used shall be stated in the test report.
3. During each operating cycle, the circuit-breaker shall remain closed for a sufficient time to ensure that the full current is established, but not exceeding 2 s.

■ Recommendation for updates

With moulded case circuit breakers and earth leakage circuit breakers, ageing can occur due to the usage environment and conditions of the coil, electronic components and insulation in addition to the service life of the contacts and parts that depend on the number of switching operations.
Regarding the use of products, they should not only be updated based on the above operation durability performance, but should be updated after around 15 years as described in the standard operating conditions in the “Recommended Maintenance and Inspection of High and Low Voltage Electrical Equipment” published by JEMA Japan Electrical Manufacturers’ Association.

9 Appendix

1 Trip button, earth leakage indicator, test button, selector switch mounting position ····· 9-2
2 Handle operation and dimensions ····· 9-5
3 Maintenance and Inspection Checker ····· 9-6
4 Internal Resistance and Power Consumption ····· 9-7
5 Calculation and Reference Graphs of the Short Circuit Current ····· 9-10
6 Order Form ····· 9-19

1 Trip button, earth leakage indicator, test button, selector switch mounting position

ASL : Arrangement Standard Line ℄ : Handle Centre Line ⊬ : Handle Frame Centre Line

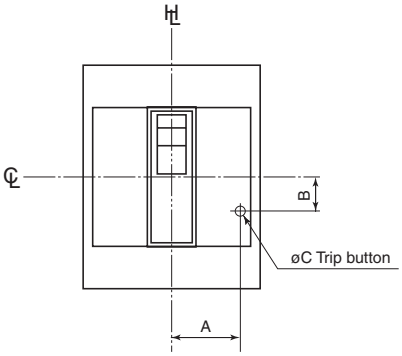

Fig. 1

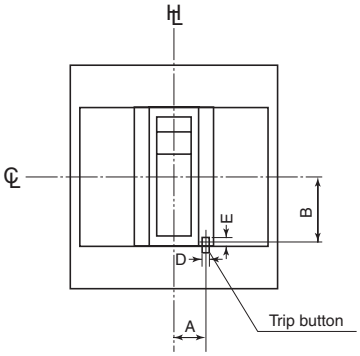

Fig. 2

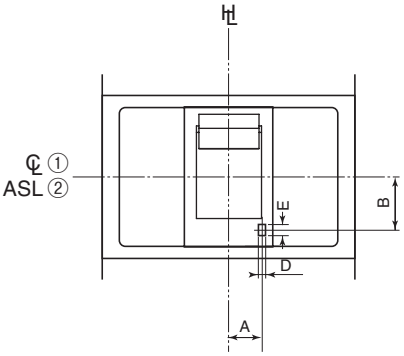

Fig. 3

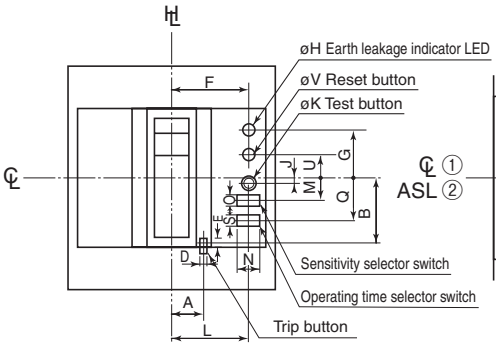

Fig. 4

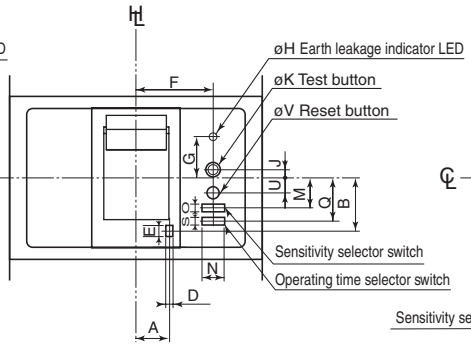

Fig. 5

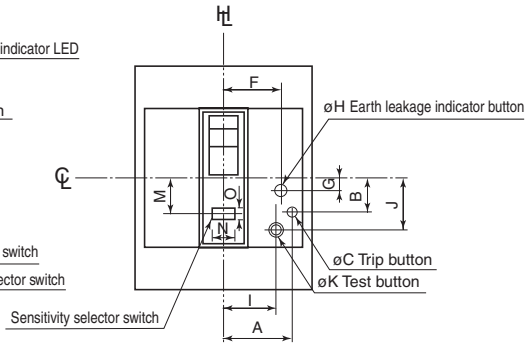

Fig. 6

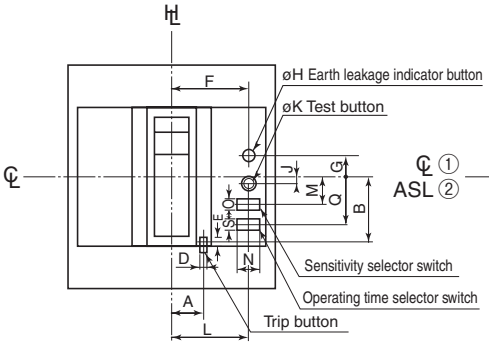

Fig. 7

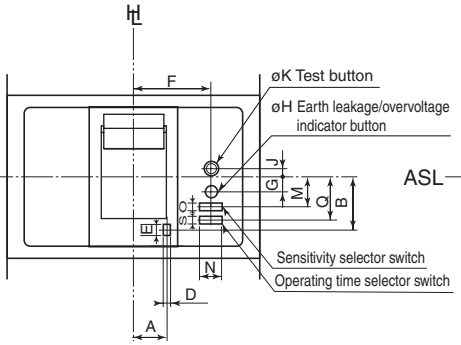

Fig. 8

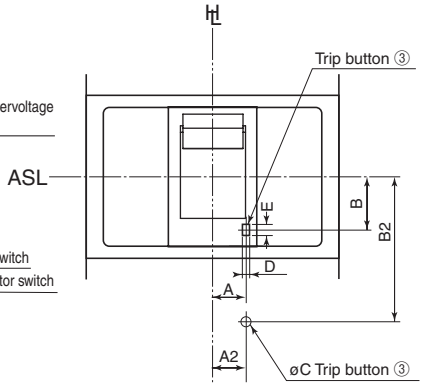

Fig. 9

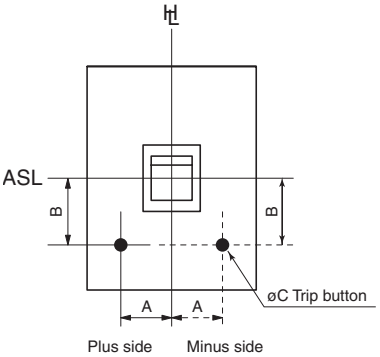

Fig.10

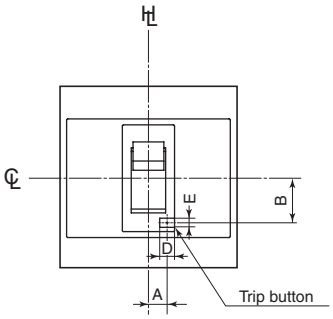

Fig. 11

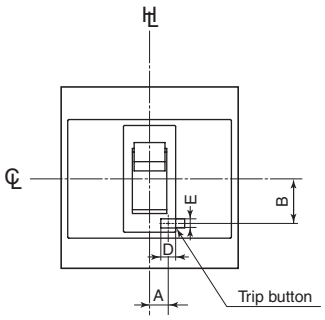

Fig. 12

ASL : Arrangement Standard Line ℄ : Handle Centre Line ⊦℄ : Handle Frame Centre Line

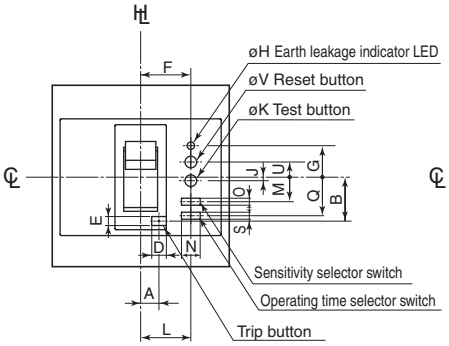

Fig. 13

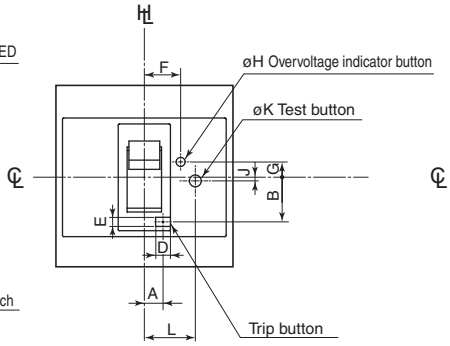

Fig. 14

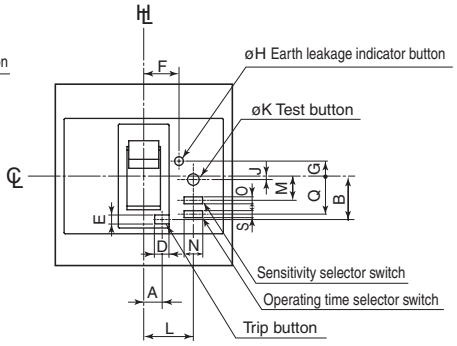

Fig. 15

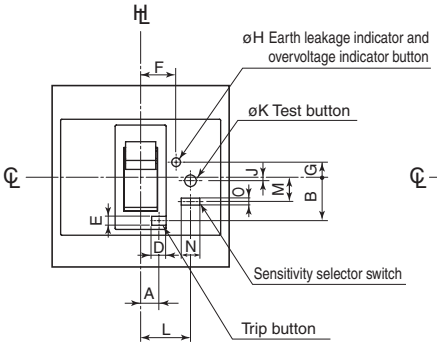

Fig. 16

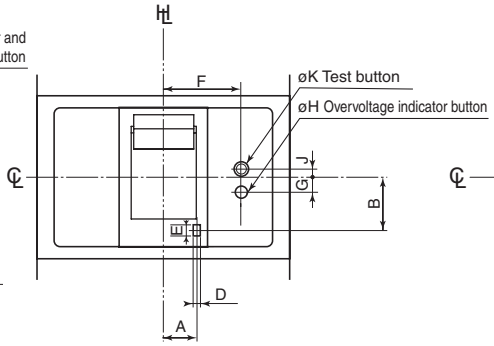

Fig. 17

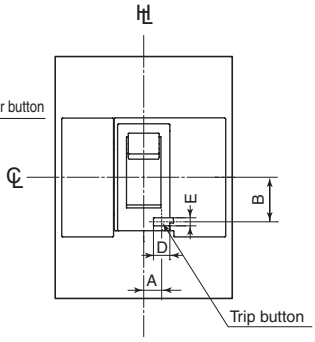

Fig. 16

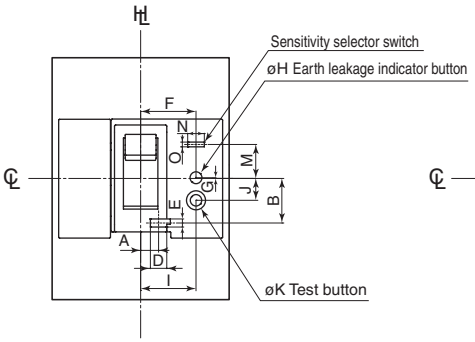

Fig. 19

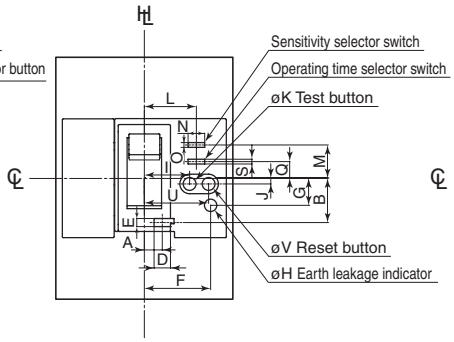

Fig. 20

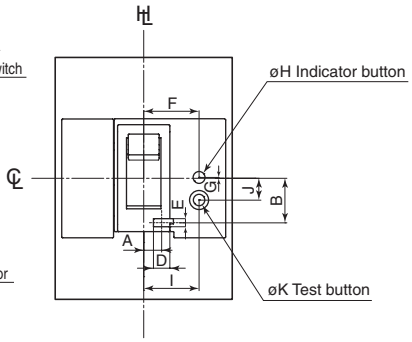

Fig. 21

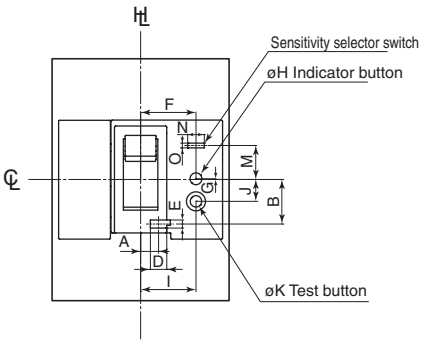

Fig. 22

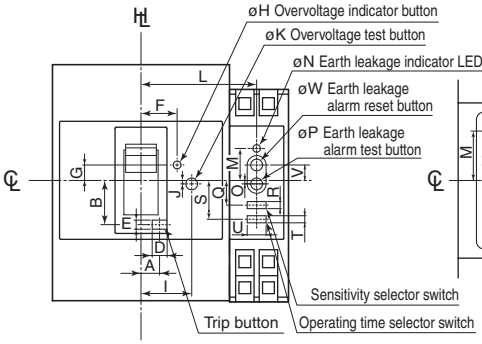

Fig. 23

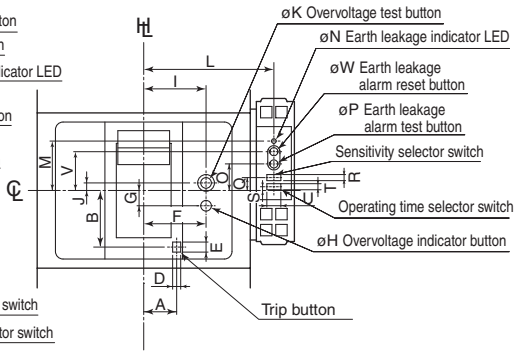

Fig. 24

1 Trip button, earth leakage indicator, test button,selector switch mounting position

Mounting dimensions mm

Series	Breaker	Ref. figure	Number of poles	Trip button A	B	C	D	E
MCCB	E30-NM, S30-NM, E50-NM, S50-NM, E100-NM	1	3	32.7	13.5	4	—	—
	PE30-NF/NN, PS30-NF, PE50-NF/NN, PS50-NF, PE60-NF, PS60-NF, PE125-NF/NN,	18	2/3	7.5	18.8	—	6.9	3.4
	S50-SF, S125-SF/SN	11	2/3/4	7.6	18.8	—	6.9	3.4
	PS50-PF, PS125-NF/PF/NN, PS125-NE/PE	12	2/3/4	7	17.9	—	7.9	3.4
	S100-GF, S125-GF	2	2/3/4	13.8	20.4	—	3.3	4.3
	H100-NF, H125-NF, H225-NF/NE, H250-NF, L100-NF, L125-NF, L225-NF, L250-NF	2	3/4	17.2	20.4	—	3.3	4.3
	E250-SF, S250-SF, S250-SM/SN	11	3/4	9.5	18.6	—	3	4.8
	PS250-PF/NN, PS250-NE/PE	12	3/4	7	17.9	—	7.9	3.4
	PS400-CF/NF/GF/NN, PS400-NE/GE, PH400-CF, PH400-CE, PS630-CF/NF/GF/NN, PS630-NE/GE, PH630-CF, PH630-CE	11	3/4	22.3	38.7	—	6.3	8.6
	E400-NF, H400-NE, L400-NE	3 ①	3/4	21.6	37.2	—	5.3	6.6
	S630-CF/NF/NE/GN, S800-CF/NF/RF/PF/NN, S800-NE/RE/PE, S1000-CE/NN	3 ②	3/4	21.8	33	—	5.3	6.6
	H630-NE, L630-NE, H800-NE, L800-NE	3 ②	3/4	21.8	33	—	5.3	6.6

Series	Breaker	Ref. figure	Number of poles	Trip button A	B	A2	B2	C	D	E
MCCB	S1250-NE/GE/NN	9 ③	3/4	30	37.5	31	70.5	6	6	8
	S1600-NE/NN	9 ③	3/4	30	37.5	31	70.5	6	6	8

Series	Breaker	Ref. figure	Number of poles	Trip button A	B	C
MCCB	TL-1000NE, TL-1200NE	10	3/4	0	72.5	6
	XS2000NE/NN, XS2500NE/NN, XS3200NE/NN	10	3/4	+39	126	6

Series	Breaker	Ref. figure	Number of poles	Trip button					Earth leakage / overvoltage indicator			Test button			Sensitivity selector switch				Operating time selector switch		Reset button	
				A	B	C	D	E	F	G	H	I	J	K	L	M	N	O	Q	S	U	V
ELCB	ZE30-NM, ZS30-NM, ZE50-NM, ZS50-CM, ZE100-NM	6	3	32.7	13.5	4	—	—	25.7	6.7	5.5	24.2	21.2	5	—	13.5	7.8	3.6	—	—	—	—
	PZE30-NF, PZE50-NF, PZE60-NF, PZE125-NF, PZS30-NF, PZS50-NF, PZS60-NF	19	3	7.5	18.8	—	6.9	3.4	23.3	0.4	5	23.3	9.1	4.8	—	14.4	7	2	—	—	—	—
	ZS50-SF, ZS125-SF, ZS100-SM	15	3	7.6	18.8	—	6.9	3.4	15.3	6.5	3.3	—	1.5	5	21.5	10.5	8	3	16.5	3	—	—
	ZS100-GF, ZS125-GF	7	3/4	13.8	20.4	—	3.3	4.3	26.2	5.8	5.5	—	1.9	5	26.7	9	8	3	14	3	—	—
	ZS225-GF, ZS250-GF	7	3/4	17.2	20.4	—	3.3	4.3	31.1	5.8	5.5	—	1.9	5	31.6	9	8	3	14	3	—	—
	ZE250-SF, ZS250-SF/SM	15	3	9.5	18.6	—	3.0	4.8	31.1	5.8	5.5	—	1.9	5	31.6	9	8	3	14	3	—	—
	ZE400-NF, ZS400-NF/GF	8 ①	3/4	21.6	37.2	—	5.3	6.6	41	10	7	—	5	7	—	22	8	3	27	3	—	—
	ZS630-CF, ZS630-NF, ZS800-CF, ZS800-NF	8 ②	3/4	21.8	33	—	5.3	6.6	64.2	8.5	7	—	6.5	7	—	20.5	8	3	25.5	3	—	—
Circuit Breaker with Earth Leakage Alarm	PE50-NFZ, PS50-NFZ, PE125-NFZ	20	3	7.5	18.8	—	6.9	3.4	27.9	11.4	5.2	19.1	2.4	5.4	21.9	14	7	2	7	2	27.1	5.4
	ZAS50-GF, ZAS100-GF, ZAS125-GF	4	3/4	13.8	20.4	—	3.3	4.3	26.2	12.3	3	—	1.9	5	26.7	9	8	3	14	3	5.8	5
	ZAS225-GF, ZAS250-GF	4	3/4	17.2	20.4	—	3.3	4.3	31.1	12.3	3	—	1.9	5	31.6	9	8	3	14	3	5.8	5
	ZAS125-SF	13	3	7.6	18.8	—	6.9	3.4	21.5	13.5	3	—	1.5	5	21.5	10.5	8	3	16.5	3	6.5	5
	ZAE250-SF, ZAS250-SF	13	3	9.5	18.6	—	3.0	4.8	31.1	12.3	3	—	1.9	5	31.6	9	8	3	14	3	5.8	5
	ZAE400-NF, ZAS400-NF/GF	5 ①	3/4	21.6	37.2	—	5.3	6.6	41	20	3	—	5	7	—	22	8	3	27	3	10	7
	ZAS630-CF/NF, ZAS800-CF/NF	5 ②	3/4	21.8	33	—	5.3	6.6	64.2	22	3	—	6.5	7	—	20.5	8	3	25.5	3	8.5	7
Single phase 3-wire circuit breaker with neutral phase open protection	PE50-NFN, PE125-NFN	21	3	7.5	18.8	—	6.9	3.4	23.3	0.4	5	23.3	9.1	4.8	—	—	—	—	—	—	—	—
	NS125-SF	14	3	7.6	18.8	—	6.9	3.4	15.3	6.5	3.3	—	1.5	5	21.5	—	—	—	—	—	—	—
	NE250-SF, NS250-SF	14	3	9.5	18.6	—	3.0	4.8	31.1	5.8	5.5	—	1.9	5	31.6	—	—	—	—	—	—	—
	NE400-NF, NS400-NF	17	3	21.6	37.2	—	5.3	6.6	41	10	7	—	5	7	—	—	—	—	—	—	—	—
	NS630-NF, NS800-NF	17	3	21.8	33	—	5.3	6.6	64.2	8.5	7	—	6.5	7	—	—	—	—	—	—	—	—
Single phase 3-wire earth leakage circuit breaker with neutral phase open protection	PZE50-NFN, PZE125-NFN	22	3	7.5	18.8	—	6.9	3.4	23.3	0.4	5	23.3	9.1	4.8	—	14.4	7	2	—	—	—	—
	ZNS125-SF	16	3	7.6	18.8	—	6.9	3.4	15.3	6.5	3.3	—	1.5	5	21.5	10.5	8	3	—	—	—	—
	ZNE250-SF, ZNS250-SF	16	3	9.5	18.6	—	3.0	4.8	31.1	5.8	5.5	—	1.9	5	31.6	9	8	3	—	—	—	—
	ZNE400-NF, ZNS400-NF	8 ①	3	21.6	37.2	—	5.3	6.6	41	10	7	—	5	7	—	22	8	3	—	—	—	—

Series	Breaker	Ref. figure	Number of poles	Trip button					Overvoltage indicator button			Overvoltage test button			Earth leakage indicator LED			Earth leakage alarm test button		Sensitivity current selector switch		Operating time selector switch			Earth leakage alarm reset button	
				A	B	C	D	E	F	G	H	I	J	K	L	M	N	O	P	Q	R	S	T	U	V	W
Single phase 3-wire circuit breaker with neutral phase open protection and earth leakage alarm	NAE125-SF, NAS125-SF	23	3	7.6	18.8	—	6.9	3.4	15.3	6.5	3.3	21.5	1.5	5	49	13.5	3.2	1.5	5	10.5	3	16.5	3	8	6.5	5
	NAE250-SF, NAS250-SF	23	3	9.5	18.6	—	3	4.8	31.1	5.8	5.5	31.6	1.9	5	64	15.5	3.2	0.5	5	8.5	3	14.5	3	8	8.5	5
	NAE400-NF, NAS400-NF	24	3	21.6	37.2	—	5.3	6.6	41	10	7	41	5	7	85.5	32.5	3.2	17.5	5	8.5	3	2.5	3	8	25.5	5

Notes ① : Apply ℄ Handle Centre Line.
② : Apply ASL Arrangement Standard Line.
③ : 2 trip buttons are equipped.

2 Handle operation and dimensions

Moulded Case Circuit Breakers • Earth Leakage Circuit Breakers

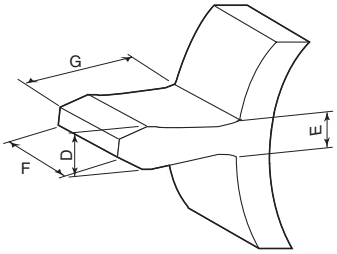

Fig.1

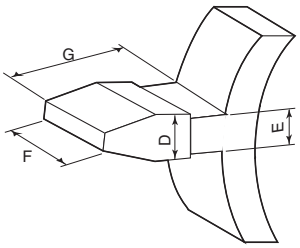

Fig.2

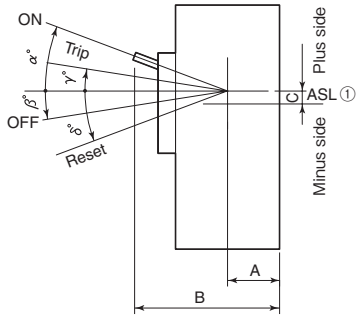

Frame size(A)	MCCB	ELCB	Number of poles	Ref. figure	Operetion angle ON α°	OFF β°	Trip γ°	Reset δ°	Dimensions (mm) A	B	C	D	E	F	G	Operating force N OFF↓ON	ON↓OFF	Trip↓Reset	Radius of rotation (mm)
30, 50, 60, 100, 125	E30-NM, S30-NM, E50-NM, S50-NM, E100-NM	ZE30-NM, ZS30-NM, ZE50-NM, ZS50-CM, ZE100-NM	2	1	22	15	4	17.5	57	84	9.5	5	5	12	19	15.6	20.1	33.1	26.9
			3													21.9	26.0	59.5	26.9
	PE30-NF/NN, PS30-NF, PE50-NF/NN/NFZ/NFN, PS50-NF/NFZ, PE60-NF, PS60-NF, PE125-NF/NN/NFZ/NFN	PZE30-NF, PZS30-NF, PZE50-NF/NFN, PZS50-NF, PZE60-NF, PZS60-NF, PZE125-NF/NFN	2/3 ②	1	13.4	11.6	2.5	14	36.8	90	0	7	5.4	13	16.6	15	23	38	53.2
			2/3 ③													25	35	52	53.2
	S50-SF, S125-SF/SN, NAE125-SF, NAS125-SF, ZAS125-SF, NS125-SF	ZS50-SF, ZS125-SF, ZS100-SM, ZNS125-SF	2/3/4	1	12.7	10.4	2	13.2	40.6	95	–2	7.4	7.8	13	22.8	44.1	37.2	78.4	54.5
	PS50-PF, PS125-NF/PF/NN, PS125-NE/PE		2/3/4	1	14.5	9.3	4.3	12.2	39.4	95	–1.1	7.4	6.8	13	23.2	40	30	60	56
	S100-GF, S125-GF, ZAS50-GF, ZAS100-GF, ZAS125-GF	ZS100-GF, ZS125-GF	2/3/4	1	19.2	16.5	4.1	19	26	92	0	6.8	9.3	13	20.4	22.0	28.0	68.0	66.0
	H100-NF, H125-NF, L100-NF, L125-NF		3/4	1	19.2	16.5	4.1	19	61	127	0	6.8	9.3	13	20.4	25.0	36.0	76.0	66.0
225, 250	H225-NF/NE, H250-NF, L225-NF, L250-NF		3/4	1	19.2	16.5	4.1	19	61	127	0	6.8	9.3	13	20.4	25.0	36.0	76.0	66.0
	E250-SF, S250-SF, S250-SM/SN, ZAE250-SF, ZAS250-SF, NAE250-SF, NAS250-SF, NE250-SF, NS250-SF	ZE250-SF, ZS250-SF/SM, ZNE250-SF, ZNS250-SF	3/4	1	11.8	13.2	3.8	16.2	40.5	95	0	7.4	7.2	13	21.1	53.0	57.0	91.0	54.4
	PS250-PF/NN, PS250-NE/PE		3/4	1	14.5	9.3	4.3	12.2	39.4	95	–1.1	7.4	6.8	13	23.2	55	40	95	56
	ZAS225-GF, ZAS250-GF	ZS225-GF, ZS250-GF	3/4	1	19.2	16.5	4.1	19	26	92	0	6.8	9.3	13	20.4	25.0	36.0	76.0	66.0
400	E400-NF, ZAE400-NF, ZAS400-NF/GF, NAE400-NF, NAS400-NF, NE400-NF, NS400-NF	ZE400-NF, ZS400-NF/GF, ZNE400-NF, ZNS400-NF	3/4	2	19.8	19.3	–3.5	22.5	53.6	145	2.8	14	9	34	39.5	110	115	125	91.4
	PS400-CF/NF/GF/NN, PS400-NE/GE, PH400-CF, PH400-CE		3/4	2	18.3	12.6	2	14.7	56.3	151	–4	16.4	12	34	35.5	150	130	175	94.7
	H400-NE, L400-NE		3/4	2	19.8	19.3	–3.5	22.5	90.6	182	2.8	14	9	34	39.5	110	115	125	91.4
600, 630, 800, 1000	PS630-CF/NF/GF/NN, PS630-NE/GE, PH630-CF, PH630-CE		3/4	2	18.3	12.6	2	14.7	56.3	151	–4	16.4	12	34	35.5	150	130	175	94.7
	S630-CF/NF/NE/GN, S800-CF/NF/RF/PF/NN, ZAS630-CF/NF, ZAS800-CF/NF, NS630-NF, NS800-NF, S800-NE/RE/PE, S1000-CE/NN	ZS630-CF/NF, ZS800-CF/NF	3/4	2	20	18	2	22	53.7	145	5	13	11	40	39.5	140	140	170	91.3
	H630-NE, L630-NE, H800-NE, L800-NE,		3/4	2	20	18	2	22	90.7	182	5	13	11	40	39.5	140	140	170	91.3
	TL-1000NE, TL-1200NE		3/4	1	22	4	12	9	93.5	191	–2.8	11	12.5	40	30	157	294	343	98.3
1250	S1250-NE/GE/NN		3/4	1	22	4	12	9	73.5	171	–2.8	11	12.5	40	30	157	294	343	98.3
1600	S1600-NE/NN		3/4	1	22	4	12	9	93.5	191	–2.8	11	12.5	40	30	157	294	343	98.3
2000, 2500, 3200	XS2000NE, XS2000NN, XS2500NE, XS2500NN, XS3200NE, XS3200NN		3/4	1	18.3	10	7.7	15.3	100	245	+2	20.5	24	60	56.5	382	322	559	146

Unit : Operating force : N
(1 N ≒ $\frac{1}{9.8}$ kgf)

Notes ① : Apply ℄ Handle Centre Line depending on the model. See the outline drawing in Chapter 7.
② : In the case of 10A or less.
③ : In the case of 15A or more.

3 Maintenance and Inspection Checker

TNS-3 OCR Checker

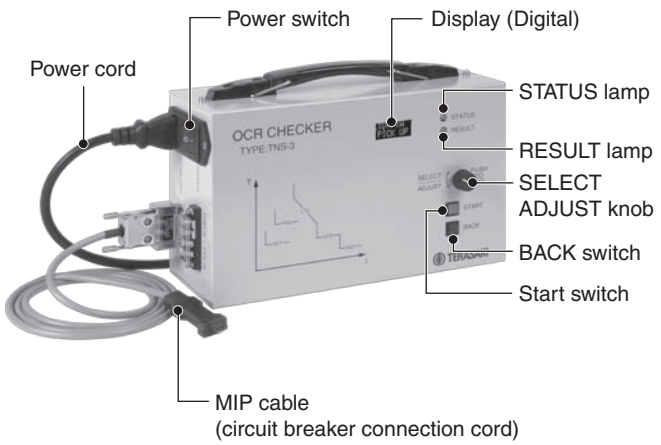

The TNS-3 type OCR checker can be used to easily check the trip function of XOU type OCR and XOS type OCR electronic circuit breakers and AGR12BL type OCR AR-E type air circuit breakers in the field. The types of check are the set current value and tripping time of each of Long Time Delay (LTD), Short Time Delay (STD), Instantaneous (INST), and Ground Fault Trip (GFT). Please use the checker according to the application.

Ratings and Specifications

Type	TNS-3
Power Source	100～240V AC Single Phase 50/60Hz
Power Consumption	30VA
Application (Please use with no power flowing through the circuit breaker)	●LTD function check (Set current and trip time values) ●STD function check (Set trip time value) ●INST function check (Set trip time value) ●GFT function check (Set trip time value)
Measurement of set current values	●Display 4-digit digital display ●Range XOS(OCR) 0～750mA XOU(OCR) 0～1500mA
Measurement of tripping time values	●Display 3-digit digital display ●Range 0.01～999.9s
Outline Dimensions	241mm(W)×157mm(H)×109mm(D)
Weight	2.3kg
Accessories	●Power cord (with power conversion plug type C) 3m, 1pc
Optional ①	Order codes TNS-3 CABLE1 XOS type OCR MIP cable 2m, 1pc TNS-3 CABLE2 XOU type OCR (for 400 to 1600AF) MIP cable 2m, 1pc TNS-3 CABLE3 XOU type OCR (for 225AF) MIP cable 2m, 1pc TNS-3 CABLE4 AGR-12 BL type OCR (for AR-E type ACB) MIP cable 2m, 1pc

Note ① : MIP cables are not provided as standard. Please specify the cables you require separately.

TTP00 OCR Checker

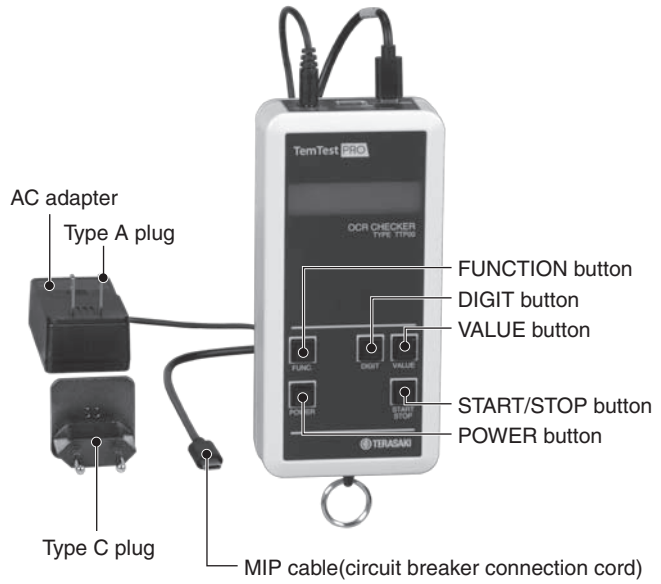

The TTP00 type OCR checker can be used to easily check the trip function of TPOT type OCR, TPOP type OCR, and TPOU type OCR electronic circuit breakers in the field.

Ratings and Specifications

Type	TTP00
Power Source	Single-phase 100 to 240V AC, 50/60Hz or AA alkaline batteries 1.5V × 4 or nickel-metal hydride rechargeable batteries 1.2V × 4
Power Consumption	3VA
Application (Please use with no power flowing through the circuit breaker)	●LTD function check (Set current and tripping time values) ●STD function check (Set current and tripping time values) ●INST function check (Set current value) ●Preferential trip alarm function check (Set current and tripping time values) ●GF function check (Set current and tripping time values) ●N-phase protection function check (Set current and tripping time values)
Measurement of set current values	●Display 4-digit digital display ●Range 1A～9,999A
Measurement of tripping time values	●Display Digital display (0.01s unit for 9.99s or less, 0.1s unit for 10.0s or more) ●Range 0.01～999.9sec
Outline Dimensions	80mm(W)×165mm(H)×35mm(D)
Weight	0.4kg (including accessories)
Accessories	MIP cable 2m × 1pc AC adapter (with power cord 1.9m) × 1unit AC adapter plug Type A (for domestic use) × 1pc Type C (for Europe) × 1pc
Optional cable ①	[Order codes] TTPMCA MIP cable for TPOT, TPOP and TPOU OCR 2m × 1pc TTPCCA MIP cable for calibration

Note ① : The MIP cable that is included as standard with TTP00 is used for TemPower PRO air circuit breakers, when using TTP00 for electronic circuit breaker, be sure to order the TTPMCA type MIP cable.

4 Internal Resistance and Power Consumption

■ Moulded Case Circuit Breakers

Frame size(A)	Breaker	Rated current (A)	Internal resistance (DCmΩ) ① ・Value per pole FC	Internal resistance (DCmΩ) ① ・Value per pole Plug-in	DC Power consumption (W) ② ・Value per pole FC	DC Power consumption (W) ② ・Value per pole Plug-in
30	PE30-NF, PS30-NF	3	135	136	1.22	1.22
		5	51.5	51.9	1.29	1.30
		10	13.0	13.3	1.30	1.33
		15	7.1	7.3	1.60	1.64
		20	6.8	6.9	2.72	2.76
		30	2.7	3.2	2.43	2.88
	E30-NM, S30-NM	1.4	490	—	2.9	—
		2.6	143	—	2.9	—
		4	60	—	2.9	—
		8	17.5	—	3.4	—
		10	11.4	—	3.4	—
		16	5.6	—	4.3	—
		24	2.9	—	5.1	—
		32	2.1	—	6.5	—
	S30-NM	0.7	1940	—	2.8	—
		2	241	—	2.9	—
		5	39.3	—	2.9	—
		12	9.6	—	4.2	—
50	PE50-NF, PS50-NF	15	7.1	7.3	1.60	1.64
		20	6.8	6.9	2.72	2.76
		30	2.7	3.2	2.43	2.88
		40	2.4	2.5	3.84	4.00
		50	1.6	1.8	4.00	4.50
	PE50-NFZ, PS50-NFZ	15	7.1	7.3	1.60	1.64
		20	6.8	6.9	2.72	2.76
		30	2.7	3.2	2.43	2.88
		40	2.4	2.5	3.84	4.00
		50	1.6	1.8	4.00	4.50
	PE50-NFN	15	7.1	7.3	1.60	1.64
		20	6.8	6.9	2.72	2.76
		30	2.7	3.2	2.43	2.88
		40	2.4	2.5	3.84	4.00
		50	1.6	1.8	4.00	4.50
	S50-SF	15	8.63	8.75	1.94	1.97
		20	8.63	8.75	3.45	3.5
		30	3.18	3.3	2.86	2.97
		40	2.72	2.84	4.35	4.54
		50	2.69	2.81	6.73	7.03
	ZAS50-GF	15	15.7	—	3.53	—
		20	15.7	—	6.28	—
		30	9.0	—	8.10	—
		40	2.1	—	3.36	—
		50	2.1	—	5.25	—
	S50-NM	10	10.9	—	3.3	—
		12	9.1	—	3.3	—
		16	5.1	—	2.5	—
	E50-NM, S50-NM	24	2.9	—	5.1	—
		32	2.1	—	6.5	—
		40	1.7	—	8.1	—
		45	1.6	—	9.9	—
	PS50-PF	15	13.31	13.45	2.99	3.03
		20	12.23	12.37	4.89	4.95
		30	8.78	8.92	7.90	8.03
		40	5.51	5.65	8.82	9.04
		50	5.22	5.36	13.05	13.40
	TB-5S	10	6.56	—	0.656	—
		15	5.05	—	1.14	—
		20	4.16	—	1.66	—
		30	2.44	—	2.2	—
		40	1.73	—	2.77	—
		50	1.5	—	3.75	—
	TB-5P Line side Plug-in Load side Front-connected	10	6.76		0.676	
		15	5.25		1.18	
		20	4.36		1.74	
		30	2.64		2.38	
		40	1.93		3.09	
		50	1.70		4.25	
	TB-5D	10	—	6.96	—	0.696
		15	—	5.45	—	1.23
		20	—	4.56	—	1.82
		30	—	2.84	—	2.56
		40	—	2.13	—	3.41
		50	—	1.90	—	4.75
	TB-51C (2P1E)	15	5.77 ③	—	1.3 ③	—
		15	1.55 ④	—	0.35 ④	—
		20	5.5 ③	—	2.2 ③	—
		20	1.55 ④	—	0.62 ④	—
		30	4.04 ③	—	3.64 ③	—
		30	1.55 ④	—	1.4 ④	—
	TB-52C (2P2E)	15	5.77	—	1.3	—
		20	5.5	—	2.2	—
		30	4.04	—	3.64	—
60	PE60-NF, PS60-NF	60	1.2	1.3	4.32	4.68
100	S100-GF	15	15	15.3	3.38	3.44
		20	15	15.3	6.0	6.12
		30	8.0	8.27	7.2	7.44
		40	1.8	2.07	2.88	3.31
		50	1.8	2.07	4.5	5.18
		60	1.3	1.57	4.68	5.65
		75	0.80	1.07	4.5	6.02
		100	0.80	1.07	8.0	10.7

Frame size(A)	Breaker	Rated current (A)	Internal resistance (DCmΩ) ① ・Value per pole FC	Internal resistance (DCmΩ) ① ・Value per pole Plug-in	DC Power consumption (W) ② ・Value per pole FC	DC Power consumption (W) ② ・Value per pole Plug-in
100	H100-NF, L100-NF	15	23.5	23.6	5.29	5.31
		20	23.5	23.6	9.4	9.44
		30	11.9	12	10.7	10.8
		40	1.99	2.13	3.18	3.41
		50	1.99	2.13	4.98	5.33
		60	1.62	1.76	5.83	6.34
		75	0.97	1.11	9.7	6.24
		100	0.97	1.11	9.7	11.1
	E100-NM	60	0.80	—	8.7	—
		75	0.70	—	11.5	—
		90	0.70	—	17	—
	ZAS100-GF	15	15.7	—	3.53	—
		20	15.7	—	6.28	—
		30	9.0	—	8.1	—
		40	2.1	—	3.36	—
		50	2.1	—	5.25	—
		60	1.6	—	5.76	—
		75	1.1	—	6.19	—
		100	1.1	—	11	—
125	PE125-NF	60	1.2	1.3	4.32	4.68
		75	1.0	1.1	5.63	6.19
		100	0.83	1.1	8.30	11.0
		125	0.62	0.85	9.69	13.3
	PE125-NFZ	60	1.2	—	4.32	—
		75	1.0	—	5.63	—
		100	0.83	—	8.30	—
		125	0.62	—	9.69	—
	PE125-NFN	60	1.2	—	4.32	—
		75	1.0	—	5.63	—
		100	0.83	—	8.30	—
		125	0.62	—	9.69	—
	S125-SF, S125-SN	15	8.63	8.75	1.94	1.97
		20	8.63	8.75	3.45	3.5
		30	3.18	3.3	2.86	2.97
		40	2.72	2.84	4.35	4.54
		50	2.69	2.81	6.73	7.03
		60	2.14	2.26	7.7	8.14
		75	1.42	1.54	7.99	8.66
		100	0.93	1.05	9.3	10.5
		125	0.84	0.96	13.13	15
	NAE125-SF, NAS125-SF	15	5.47	—	1.23	—
		20	3.87	—	1.55	—
		30	2.70	—	2.43	—
		40	2.35	—	3.76	—
		50	1.87	—	4.67	—
		60	1.28	—	4.60	—
		75	1.22	—	6.86	—
		100	0.65	—	6.46	—
		125	0.65	—	10.09	—
	PS125-NF, PS125-PF	15	13.31	13.45	2.99	3.03
		20	12.23	12.37	4.89	4.95
		30	8.78	8.92	7.90	8.03
		40	5.51	5.65	8.82	9.04
		50	5.22	5.36	13.05	13.40
		60	1.61	1.75	5.80	6.30
		75	1.58	1.72	8.89	9.68
		100	1.12	1.26	11.20	12.60
		125	1.20	1.34	18.75	20.94
	PS125-NE, PS125-PE	40	1.0	1.14	1.6	1.8
		50	1.0	1.14	2.5	2.9
		60	1.0	1.14	3.6	4.1
		75	1.0	1.14	5.6	6.4
		100	1.0	1.14	10.0	11.4
		125	1.0	1.14	15.6	17.8
	S125-GF	125	0.8	1.07	12.5	16.7
	H125-NF, L125-NF	125	0.97	1.11	15.2	17.3
	ZAS125-SF	15	5.47	—	1.23	—
		20	3.87	—	1.55	—
		30	2.7	—	2.43	—
		40	2.35	—	3.76	—
		50	1.87	—	4.67	—
		60	1.28	—	4.6	—
		75	1.22	—	6.86	—
		100	0.65	—	6.46	—
		125	0.65	—	10.09	—
	NS125-SF	15	5.67	—	1.28	—
		20	3.84	—	1.54	—
		30	2.63	—	2.37	—
		40	2.47	—	3.95	—
		50	1.93	—	4.83	—
		60	1.93	—	6.95	—
		75	1.3	—	7.34	—
		100	0.78	—	7.84	—
		125	0.41	—	6.44	—
	ZAS125-GF	125	0.60	—	9.4	—

Notes ① : The resistance value is a reference value. It cannot be used for acceptance inspections, etc.
② : The power consumption value is calculated based on the DC internal resistance.
③ : The value of poles with a trip element.
④ : The value of poles without a trip element.
⑤ : Please contact us.

4 Internal Resistance and Power Consumption

Moulded Case Circuit Breakers

Frame size(A)	Breaker	Rated current (A)	Internal resistance (DCmΩ) ① ・Value per pole FC	Internal resistance (DCmΩ) ① ・Value per pole Plug-in	DC Power consumption (W) ② ・Value per pole FC	DC Power consumption (W) ② ・Value per pole Plug-in
225	**H225-NE**	125	0.39	—	6.09	—
		150	0.39	—	8.78	—
		175	0.39	—	11.9	—
		200	0.39	—	15.6	—
		225	0.39	—	19.7	—
	H225-NF, L225-NF	125	0.57	0.71	8.91	11.09
		150	0.57	0.71	12.83	15.98
		175	0.36	0.50	11.03	15.31
		200	0.36	0.50	14.4	20
		225	0.36	0.50	18.23	25.31
	ZAS225-GF	125	0.44	—	6.88	—
		150	0.44	—	9.9	—
		175	0.37	—	11.33	—
		200	0.37	—	14.8	—
		225	0.37	—	18.73	—
225, 250	**E250-SF, S250-SF**	125	0.45	0.59	7.03	9.22
		150	0.45	0.59	10.13	13.28
		175	0.35	0.49	10.72	15.01
		200	0.35	0.49	14	19.6
		225	0.26	0.40	13.16	20.25
		250	0.26	0.40	16.25	25
	S250-SM	125	0.45	0.59	7.03	9.22
		150	0.45	0.59	10.13	13.28
		175	0.35	0.49	10.72	15.01
		225	0.26	0.40	13.16	20.25
	NAE250-SF, NAS250-SF	125	0.50	—	7.81	—
		150	0.50	—	11.25	—
		175	0.36	—	11.03	—
		200	0.36	—	14.40	—
		225	0.31	—	15.69	—
		250	0.31	—	19.38	—
	PS250-PF	125	0.90	1.17	14.06	18.28
		150	0.57	0.84	12.83	18.90
		175	0.46	0.73	14.09	22.36
		200	0.45	0.72	18.00	28.80
		225	0.38	0.65	19.24	32.91
		250	0.41	0.68	25.63	42.50
	PS250-NE, PS250-PE	125	0.6	0.87	9.4	13.6
		150	0.6	0.87	13.5	19.6
		175	0.6	0.87	18.4	26.6
		200	0.6	0.87	24.0	34.8
		225	0.6	0.87	30.4	44.0
		250	0.6	0.87	37.5	54.4
	H250-NF, L250-NF	250	0.36	0.50	22.5	31.3
	ZAE250-SF, ZAS250-SF	125	0.50	—	7.81	—
		150	0.50	—	11.25	—
		175	0.36	—	11.03	—
		200	0.36	—	14.4	—
		225	0.31	—	15.69	—
		250	0.31	—	19.38	—
	ZAS250-GF	250	0.29	—	18.1	—
	NE250-SF, NS250-SF	125	0.45	—	7.03	—
		150	0.45	—	10.13	—
		175	0.35	—	10.72	—
		200	0.35	—	14	—
		225	0.26	—	13.16	—
		250	0.26	—	16.25	—
400	**E400-NF**	250	0.24	—	15	—
		300	0.14	—	12.6	—
		350	0.14	—	17.15	—
		400	0.14	—	22.4	—
	NAE400-NF, NAS400-NF	250	0.26	—	16.3	—
		300	0.26	—	23.4	—
		350	0.20	—	24.5	—
		400	0.20	—	32	—
	PS400-CF, PS400-NF, PS400-GF, PH400-CF	225	0.33	0.39	16.8	19.8
		250	0.33	0.39	20.7	24.4
		300	0.25	0.30	22.3	27.2
		350	0.24	0.33	29.2	40.4
		400	0.24	0.33	38.1	52.7
	PS400-NE, PS400-GE, PH400-CE	125	0.16	0.30	2.5	4.7
		150	0.16	0.30	3.7	6.8
		175	0.16	0.30	5.0	9.2
		200	0.16	0.30	6.5	12.0
		225	0.16	0.30	8.2	15.2
		250	0.16	0.30	10.2	18.8
		300	0.16	0.25	14.6	22.7
		350	0.16	0.25	19.9	30.9
		400	0.16	0.25	26.0	40.3
	H400-NE, L400-NE	250	0.19	0.23	11.9	14.4
		300	0.19	0.23	17.1	20.7
		350	0.19	0.23	23.2	28.2
		400	0.19	0.23	30.4	36.8
	ZAE400-NF, ZAS400-NF, ZAS400-GF, NE400-NF, NS400-NF	250	0.26	—	15.3	—
		300	0.26	—	23.4	—
		350	0.20	—	24.5	—
		400	0.20	—	32	—
600, 630	**S630-CF, S630-NF**	500	0.11	0.12	27.5	30.0
		600	0.11	0.12	39.6	43.2
		630	0.11	0.12	43.7	47.6
	S630-NE	250	0.08	0.09	5.0	5.63
		300	0.08	0.09	7.2	8.1
		350	0.08	0.09	9.8	11
		400	0.08	0.09	12.8	14.4
		500	0.08	0.09	20	22.5
		600	0.08	0.09	28.8	32.4
		630	0.08	0.09	31.8	35.7
600, 630	**PS630-CF, PS630-NF, PS630-GF, PH630-CF**	500	0.14	0.17	34.4	43.7
		600	0.14	0.17	49.5	62.9
	PS630-NE, PS630-GE, PH630-CE	250	0.09	0.20	5.8	12.3
		300	0.09	0.20	8.4	17.7
		350	0.09	0.20	11.4	24.1
		400	0.09	0.20	14.8	31.4
		500	0.09	0.20	23.2	49.1
		600	0.09	0.20	33.4	70.7
		630	0.09	0.20	36.8	78.0
	H630-NE, L630-NE	250	0.10	0.12	6.3	7.5
		300	0.10	0.12	9.0	10.8
		350	0.10	0.12	12.3	14.7
		400	0.10	0.12	16.0	19.2
		500	0.10	0.12	25.0	30.0
		600	0.10	0.12	36.0	43.2
		630	0.10	0.12	39.7	47.6
	NS630-NF	500	0.12	—	30	—
		600	0.12	—	43.2	—
		630	0.12	—	47.6	—
	ZAS630-CF, ZAS630-NF	500	0.12	—	30	—
		600	0.12	—	43.2	—
		630	0.12	—	47.6	—
800	**S800-CF, S800-NF, S800-RF, S800-PF**	700	0.09	0.11	44.1	53.9
		800	0.09	0.11	57.6	70.4
	S800-NE, S800-RE, S800-PE	350	0.08	0.10	9.8	12.3
		400	0.08	0.10	12.8	16
		450	0.08	0.10	16.2	20.3
		500	0.08	0.10	20	25
		600	0.08	0.10	28.8	36
		700	0.08	0.10	39.2	49
		800	0.08	0.10	51.2	64
	NS800-NF	700	0.10	—	49	—
		800	0.10	—	64	—
	ZAS800-CF, ZAS800-NF	700	0.10	—	49	—
		800	0.10	—	64	—
	H800-NE, L800-NE	350	0.10	0.12	12.3	14.7
		400	0.10	0.12	16.0	19.2
		450	0.10	0.12	20.3	24.3
		500	0.10	0.12	25.0	30.0
		600	0.10	0.12	36.0	43.2
		700	0.10	0.12	49.0	58.8
		800	0.10	0.12	64.0	76.8
1000	**S1000-CE**	400	0.062	—	9.9	—
		500	0.062	—	15.5	—
		600	0.062	—	22.3	—
		700	0.062	—	30.4	—
		800	0.062	—	39.7	—
		900	0.062	—	50.2	—
		1000	0.062	—	62.0	—
	TL-1000NE	500	0.045	0.060	11.3	15.0
		600	0.045	0.060	16.2	21.6
		700	0.045	0.060	22.1	29.4
		800	0.045	0.060	28.8	38.4
		900	0.045	0.060	36.5	48.6
		1000	0.045	0.060	45.0	60.0
1200	**TL-1200NE**	600	0.045	0.060	16.2	21.6
		700	0.045	0.060	22.1	29.4
		800	0.045	0.060	28.8	38.4
		1000	0.045	0.060	45.0	60.0
		1200	0.045	0.060	64.8	86.4
1250	**S1250-NE, S1250-GE**	500	0.040	0.053	10	13.3
		600	0.040	0.053	14.4	19.1
		700	0.040	0.053	19.6	26
		800	0.040	0.053	25.6	33.9
		1000	0.040	0.053	40	53
		1200	0.040	0.053	57.6	76.3
		1250	0.040	0.053	62.5	82.8
1600	**S1600-NE**	700	0.022	0.039 ⑥	10.8	19.1 ⑥
		800	0.022	0.039 ⑥	14.1	25 ⑥
		900	0.022	0.039 ⑥	17.8	31.6 ⑥
		1000	0.022	0.039 ⑥	22	39 ⑥
		1200	0.022	0.039 ⑥	31.7	56.2 ⑥
		1400	0.022	0.039 ⑥	43.1	76.4 ⑥
		1500	0.022	0.039 ⑥	49.5	87.8 ⑥
		1600	0.022	0.039 ⑥	56.3	99.8 ⑥
2000	**XS2000NE**	1000	0.017	0.022 ⑥	17.0	22.0 ⑥
		1200	0.017	0.022 ⑥	24.5	31.7 ⑥
		1400	0.017	0.022 ⑥	33.3	43.1 ⑥
		1600	0.017	0.022 ⑥	43.5	56.3 ⑥
		1800	0.017	0.023 ⑥	55.1	74.5 ⑥
		2000	0.017	0.023 ⑥	68.0	92.0 ⑥
2500	**XS2500NE**	1200	0.017 ⑦	—	24.5 ⑦	—
		1400	0.017 ⑦	—	33.3 ⑦	—
		1600	0.017 ⑦	—	43.5 ⑦	—
		2000	0.017 ⑦	—	68.0 ⑦	—
		2500	0.017 ⑦	—	106.2 ⑦	—
3200	**XS3200NE**	3200	0.017 ⑦	—	174.1 ⑦	—

Notes ① : The resistance value is a reference value. It cannot be used for acceptance inspections, etc.
② : The power consumption value is calculated based on the DC internal resistance.
⑥ : The value of the Draw-out type.
⑦ : The value of the Rear-connected type.

■ Earth Leakage Circuit Breakers

Frame size(A)	ELCB	Rated current (A)	Internal resistance (DCmΩ) ① ・Value per pole		DC Power consumption (W) ② ・Value per pole	
			FC	Plug-in	FC	Plug-in
30	**PZE30-NF, PZS30-NF**	5	51.5	—	1.29	—
		10	13.0	—	1.30	—
		15	7.1	—	1.60	—
		20	6.8	—	2.72	—
		30	2.7	—	2.43	—
	ZE30-NM, ZS30-NM	1.4	490	—	1.0	—
		2.6	146	—	1.0	—
		4	62.5	—	1.0	—
		5	39.5	—	1.0	—
		8	17.7	—	1.1	—
		10	11.6	—	1.2	—
		16	5.8	—	1.5	—
		24	3.1	—	1.8	—
		32	2.3	—	2.4	—
	ZS30-NM	0.7	1940	—	1.0	—
		2	242	—	1.0	—
		12	9.8	—	1.4	—
50	**PZE50-NF, PZS50-NF**	15	7.1	—	1.60	—
		20	6.8	—	2.72	—
		30	2.7	—	2.43	—
		40	2.4	—	3.84	—
		50	1.6	—	4.00	—
	PZE50-NFN	15	7.1	—	1.60	—
		20	6.8	—	2.72	—
		30	2.7	—	2.43	—
		40	2.4	—	3.84	—
		50	1.6	—	4.00	—
	ZS50-SF	15	5.47	—	1.23	—
		20	3.87	—	1.55	—
		30	2.7	—	2.43	—
		40	2.35	—	3.76	—
		50	1.87	—	4.67	—
	ZE50-NM	45	1.8	—	3.6	—
	ZS50-CM	0.7	1940	—	1.0	—
		1.4	490	—	1.0	—
		2	242	—	1.0	—
		2.6	146	—	1.0	—
		4	61	—	1.0	—
		5	39.5	—	1.0	—
		8	17.7	—	1.1	—
		10	11.6	—	1.2	—
		12	9.8	—	1.4	—
		16	5.8	—	1.5	—
		24	3.1	—	1.8	—
		32	2.3	—	2.4	—
		40	1.9	—	3.0	—
		45	1.8	—	3.6	—
	TZ-51C (2P1E)	15	6.6 ③	—	2.49 ③	—
		15	1.63 ④	—	1.37 ④	—
		20	6.12 ③	—	3.45 ③	—
		20	1.63 ④	—	1.65 ④	—
		30	3.55 ③	—	4.2 ③	—
		30	1.63 ④	—	2.47 ④	—
	TZ-52C (2P2E)	15	6.6	—	2.49	—
		20	6.12	—	3.45	—
		30	3.61	—	4.25	—
60	**PZE60-NF, PZS60-NF**	60	1.2	—	4.32	—

Notes ① : The resistance value is a reference value. It cannot be used for acceptance inspections, etc.
② : The power consumption value is calculated based on the DC internal resistance.
③ : The value of poles with a trip element.
④ : The value of poles without a trip element.

Frame size(A)	ELCB	Rated current (A)	Internal resistance (DCmΩ) ① ・Value per pole		DC Power consumption (W) ② ・Value per pole	
			FC	Plug-in	FC	Plug-in
100, 125	**ZS100-GF**	15	15.7	—	3.53	—
		20	15.7	—	6.28	—
		30	9.0	—	8.1	—
		40	2.1	—	3.36	—
		50	2.1	—	5.25	—
		60	1.6	—	5.76	—
		75	1.1	—	6.19	—
		100	1.1	—	11	—
	ZE100-NM	60	1.0	—	3.6	—
		75	0.90	—	5.1	—
		90	0.90	—	7.3	—
	ZS100-SM	16	5.47	—	1.4	—
		24	3.87	—	2.23	—
		32	2.7	—	2.77	—
		40	2.35	—	3.76	—
		45	2.11	—	4.27	—
		60	1.28	—	4.6	—
		75	1.22	—	6.86	—
		90	0.78	—	6.33	—
		100	0.65	—	6.46	—
	PZE125-NF	60	1.2	—	4.32	—
		75	1.0	—	5.63	—
		100	0.83	—	8.30	—
		125	0.62	—	9.69	—
	PZE125-NFN	60	1.2	—	4.32	—
		75	1.0	—	5.63	—
		100	0.83	—	8.30	—
		125	0.62	—	9.69	—
	ZS125-SF, ZNS125-SF	15	5.47	—	1.23	—
		20	3.87	—	1.55	—
		30	2.70	—	2.43	—
		40	2.35	—	3.76	—
		50	1.87	—	4.67	—
		60	1.28	—	4.6	—
		75	1.22	—	6.86	—
		100	0.65	—	6.46	—
		125	0.65	—	10.09	—
	ZS125-GF	125	0.60	—	9.4	—
225	**ZS225-GF**	125	0.44	—	6.88	—
		150	0.44	—	9.9	—
		175	0.37	—	11.33	—
		200	0.37	—	14.8	—
		225	0.37	—	18.73	—
250	**ZS250-GF**	250	0.29	—	18.1	—
	ZS250-SM	125	0.50	—	7.81	—
		150	0.50	—	11.25	—
		175	0.36	—	11.03	—
		225	0.31	—	15.69	—
	ZE250-SF, ZS250-SF, ZNE250-SF, ZNS250-SF	125	0.50	—	7.81	—
		150	0.50	—	11.25	—
		175	0.36	—	11.03	—
		200	0.36	—	14.4	—
		225	0.31	—	15.69	—
		250	0.31	—	19.38	—
400	**ZE400-NF, ZS400-NF, ZS400-GF,ZNE400-NF, ZNS400-NF**	250	0.26	—	16.3	—
		300	0.26	—	23.4	—
		350	0.20	—	24.5	—
		400	0.20	—	32	—
600, 630	**ZS630-CF, ZS630-NF**	500	0.12	—	30	—
		600	0.12	—	43.2	—
800	**ZS800-CF, ZS800-NF**	700	0.10	—	49	—
		800	0.10	—	64	—

5 Calculation and Reference Graphs of the Short Circuit Current

Refers to the percentage impedance method (1000kVA standard) calculation method and the method of finding the estimated short circuit current (symmetrical r.m.s. value) using a quick view graph.

Short circuit current on a 3-phase circuit.

It assumes that a short circuit has occurred at Point F of the electrical distribution system shown in Figure 1. Figure 2 shows an impedance diagram.

Fig.1 Elec. Dis. System

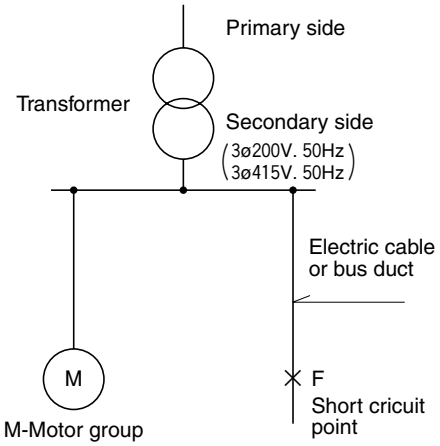

Fig.2 Impedance Diagram

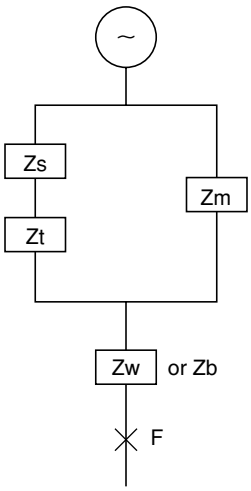

Zs : % impedance of power source
Zt : % impedance of transformer
Zm : % impedance of motor
Zw : % impedance of electric cable
Zb : % impedance of bus duct

1. Short Circuit Current Calculation

NOTE: Each impedance is calculated by taking the following value

Percent. impedance of power source (Zs)	Short circuit capacity of power source : 1000MVA. Xs/Rs = 25 (Based on NEMA AB - 1) Zs = 0.004 + j 0.0999 (%) (Converted to 1000kVA standard capacity)
Percent impedance of transformer (Zt)	(Converted to 1000kVA standard capacity. Average values of transformer manufacturers (Refer to Table 1).
Percent impedance of motor (Zm)	The total capacity of a motor group related to the short circuit current is equal to the capacity of the transformer. Impedance=25%. Xm/Rm=6 (Table 1 indicates the converted value to 1000kVA standard capacity)
Impedance of electric cable (Zw) Impedance of bus duct (Zb)	Refer to Table 2 and 3. (For electric wires, the values of a single core 6cm Distance at 50Hz are applied to the calculation example and reference graph.)

[The short circuit current at Point F is calcuated in the following conditions: Example]

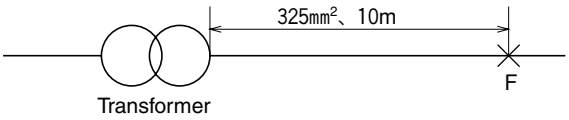

Transformer Capacity : 750kVA
Secondary side voltage : 415 V
Frequency : 50Hz
Electric cable : 325mm²,10m

Total impedance of power source	$Z_A = \frac{(Zs + Zt) \cdot Zm}{Zs + Zt + Zm}$ ·····Table 1 $= 1.327 + j5.266$ (%)
Impedence of electric cable	Multiply the value in Table 2 by the cable length of 10m and convert into the standard capacity of 1000kVA. $Zw = \frac{1000 \times 10^3}{415^2}(0.057 + j0.118) \times 10^{-3} \times 10 \times 100$ $= 0.331 + j0.6852$ (%)
Total impedance	$Z = Z_A + Zw = 1.658 + j5.9512$ $= 6.1778$
Symmetrical r.m.s. value of 3-phase short circuit current	$Is = \frac{1000 \times 10^3}{\sqrt{3} \times 415 \times 6.1778} \times 100 \fallingdotseq 22520$ (A)

Table 1. Impedance in 3-phase Circuit (Converted to 1000kVA standard capacity)

Trans. Cap (kVA)	% impedance of Trans. Zt (%)	% impedance of motor Zm (%)	Total % impedance of power source ZA (%)
50	33.4 + j 37.8	82.2 + j 493.2	28.98 + j 36.33
75	21.6 + j 31.47	54.8 + j 328.8	18.28 + j 29.39
100	16.0 + j 24.8	41.1 + j 246.6	13.46 + j 23.03
150	10.0 + j 18.07	27.4 + j 164.4	8.341 + j 16.57
200	7.4 + j 13.8	20.55 + j 123.3	6.161 + j 12.64
300	4.8 + j 10.9	13.7 + j 82.2	3.914 + j 9.773
500	2.56 + j 7.62	8.22 + j 49.32	2.064 + j 6.696
750	1.68 + j 6.16	5.48 + j 32.88	1.327 + j 5.266
1000	1.22 + j 5.21	4.11 + j 24.66	0.957 + j 4.372
1500	0.773 + j 3.99	2.74 + j 16.44	0.607 + j 3.278
2000	0.57 + j 3.035	2.055 + j 12.33	0.449 + j 2.5

Note : $Z_A = \frac{(Zs+Zt) \cdot Zm}{Zs+Zt+Zm}$

Table 2. JIS wire impedance (Zw)

Cable size (mm²)	Resistance Rw (mΩ/m)	Reactance Xw (mΩ/m)					
		50Hz			60Hz		
		2-core – 3-core	Single core, closed	Single core 6cm distance	2-core – 3-core	Single core, closed	Single core 6cm distance
ø1.6mm	8.92	0.103	0.143	0.287	0,123	0.172	0.344
ø2.0mm	5.65	0.097	0.134	0.273	0.116	0.161	0.327
ø2.6mm	3.35	0.096	0.127	0.256	0.115	0.152	0.308
2	9.24	0.100	0.138	0.279	0.020	0.167	0.335
3.5	5.20	0.092	0.126	0.261	0.110	0.152	0.314
5.5	3.33	0.092	0.120	0.247	0.110	0.145	0.297
8	2.31	0.092	0.116	0.236	0.110	0.140	0.283
14	1.30	0.088	0.111	0.218	0.106	0.134	0.261
22	0.824	0.086	0.105	0.204	0.104	0.127	0.245
30	0.623	0.083	0.101	0.195	0.100	0.122	0.234
38	0.487	0.083	0.098	0.187	0.100	0.118	0.225
50	0.378	0.081	0.095	0.178	0.097	0.115	0.214
60	0.303	0.079	0.092	0.172	0.095	0.111	0.206
80	0.230	0.078	0.087	0.173	0.094	0.107	0.196
100	0.180	0.076	0.086	0.155	0.092	0.104	0.186
125	0.144	0.076	0.087	0.148	0.091	0.106	0.178
150	0.118	0.075	0.084	0.142	0.090	0.101	0.170
200	0.092	0.073	0.084	0.134	0.089	0.101	0.161
250	0.072	0.073	0.082	0.126	0.087	0.099	0.151
325	0.057	0.072	0.080	0.118	0.086	0.097	0.142
400	0.045	—	0.079	0.112	—	0.095	0.134
500	0.037	—	0.078	0.105	—	0.094	0.127

(1) The resistance values are based on JISC3307 "660V Polyvinyl Chloride Insulated Wires (IV)" and JISC3342 "600V Polyvinyl Chloride Insulated and Sheathed Cables (VV)".
(2) The reactance value L=0.05 + 0.4605 log10 D/r (mH/km) (D=core centre to centre distance, r=center radius) then $Xw = 2\pi fL \times 10^{-3}$ (mΩ/m) (f=frequency) was calculated.

Table 3. Impedance of Bus Duct (Zb)

Rated Current (A)	Resistance (mΩ/m)	Reactance (mΩ/m)	
		50Hz	60Hz
400	0.158	0.039	0.046
600	0.127	0.033	0.039
800	0.085	0.024	0.028
1000	0.065	0.018	0.022
1200	0.053	0.014	0.017
1500	0.041	0.012	0.014
2000	0.025	0.014	0.017
2500	0.020	0.013	0.016
3000	0.017	0.011	0.013

5 Calculation and Reference Graphs of the Short Circuit Current

2. Reference graph

For the corresponding transformer capacity and the secondary voltage, read the current value(amperage)at the crossing point of the scale, indicating the distance to the short circuit point and the curve of the electric cable size.

Example 1

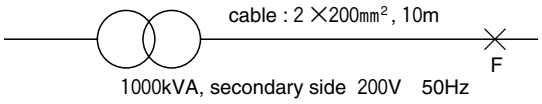

From Graph.11A graph 45000A is obtained for 2×200mm²、10m cable

Example 2

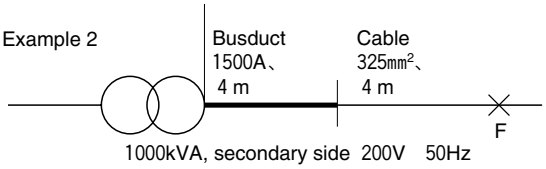

From Graph.11A graph for 325 mm², 4m cable, 50000A — A.

From the same graph for the busduct of 1500A, 8m cable, 58000A — B.

The lesser value between A and B indicates the short circuit current at Point F.

Short circuit Current Reference Graphs (The electric cable impedance for single core, 6cm distance at 50Hz)

Graph. 3A

3-phase Transformer Capacity 50kVA Secondary Voltage 200V

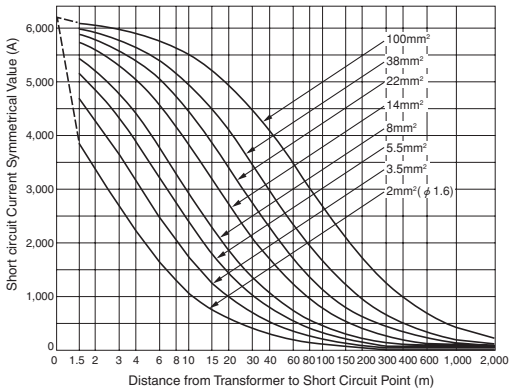

Graph. 3B

3-phase Transformer Capacity 50kVA Secondary Voltage 415V

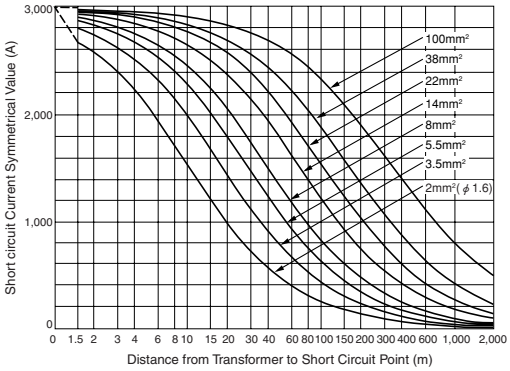

Graph. 4A

3-phase Transformer Capacity 75kVA Secondary Voltage 200V

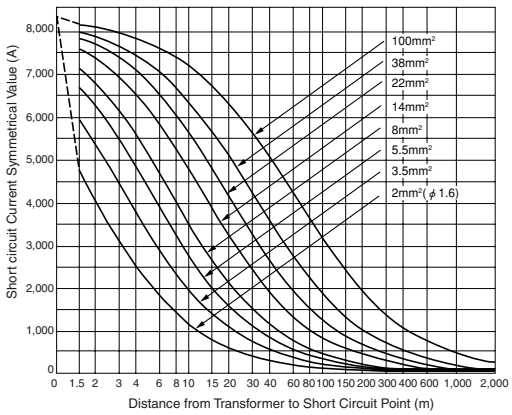

Graph. 4B

3-phase Transformer Capacity 75kVA Secondary Voltage 415V

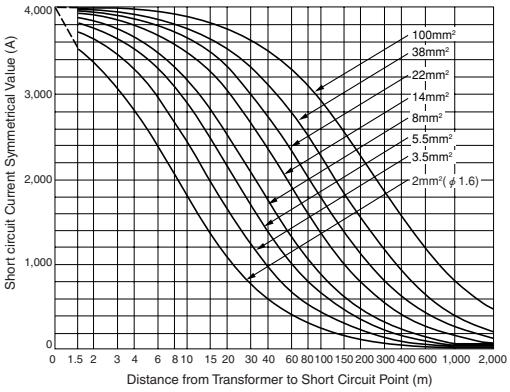

Graph. 5A

3-phase Transformer Capacity 100kVA Secondary Voltage 200V

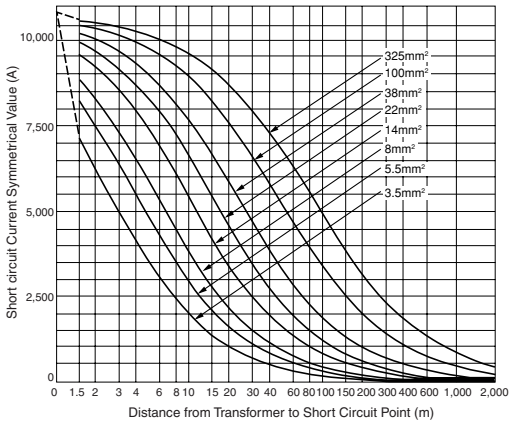

Graph. 5B

3-phase Transformer Capacity 100kVA Secondary Voltage 415V

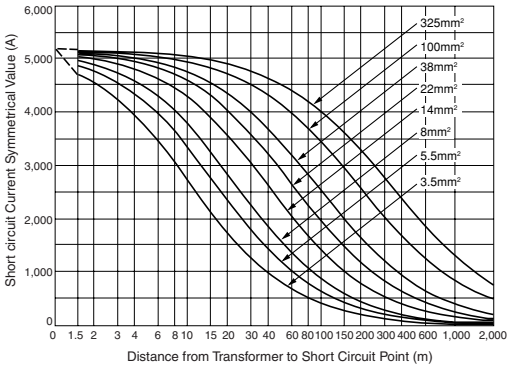

Graph. 6A

3-phase Transformer Capacity 150kVA Secondary Voltage 200V

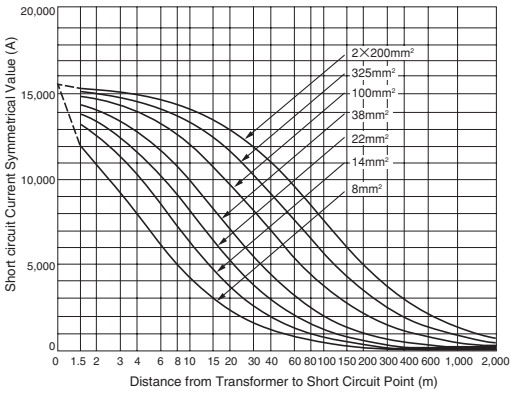

Graph. 6B

3-phase Transformer Capacity 150kVA Secondary Voltage 415V

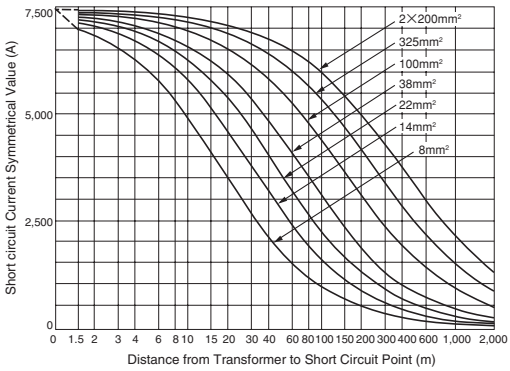

Graph. 7A

3-phase Transformer Capacity 200kVA Secondary Voltage 200V

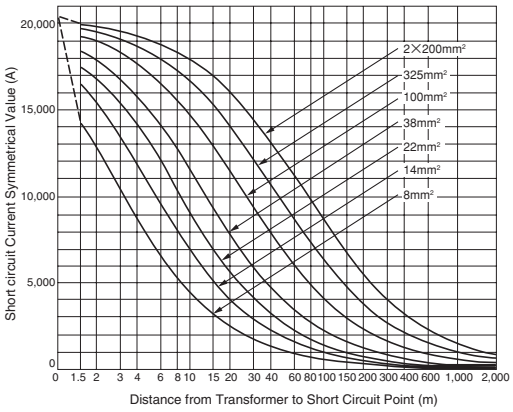

Graph. 7B

3-phase Transformer Capacity 200kVA Secondary Voltage 415V

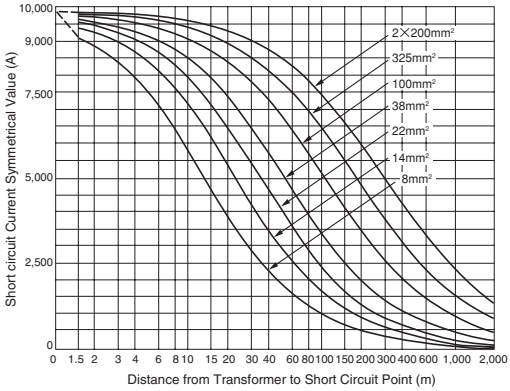

Graph. 8A

3-phase Transformer Capacity 300kVA Secondary Voltage 200V

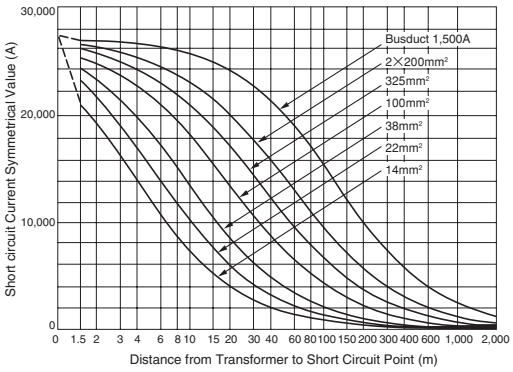

Graph. 8B

3-phase Transformer Capacity 300kVA Secondary Voltage 415V

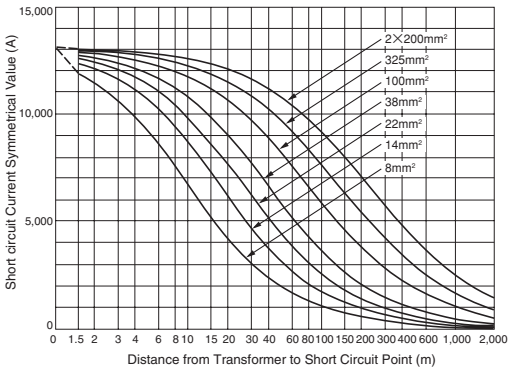

Graph. 9A

3-phase Transformer Capacity 500kVA Secondary Voltage 200V

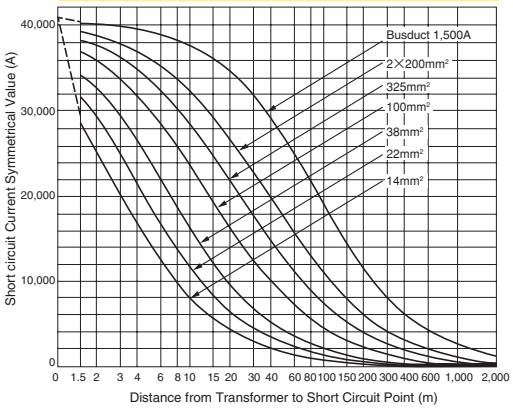

Graph. 9B

3-phase Transformer Capacity 500kVA Secondary Voltage 415V

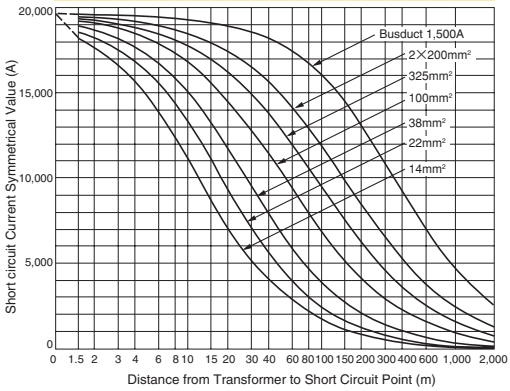

5 Calculation and Reference Graphs of the Short Circuit Current

Graph. 10A

3-phase Transformer Capacity 750kVA Secondary Voltage 200V

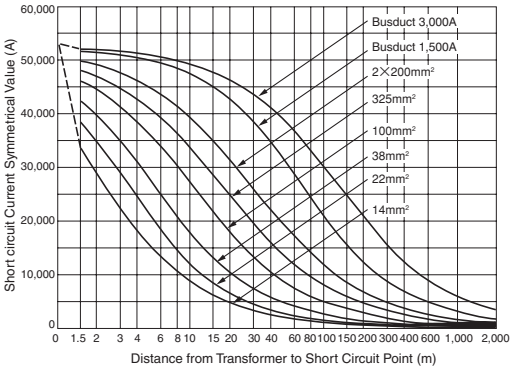

Graph. 10B

3-phase Transformer Capacity 750kVA Secondary Voltage 415V

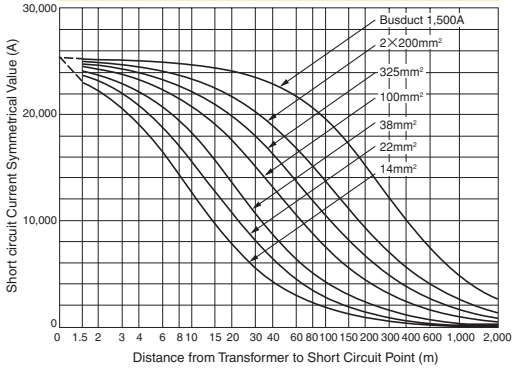

Graph. 11A

3-phase Transformer Capacity 1000kVA Secondary Voltage 200V

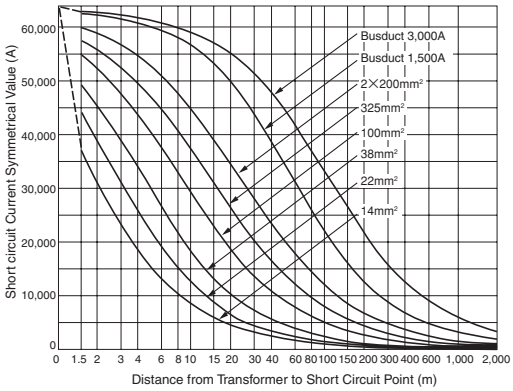

Graph. 11B

3-phase Transformer Capacity 1000kVA Secondary Voltage 415V

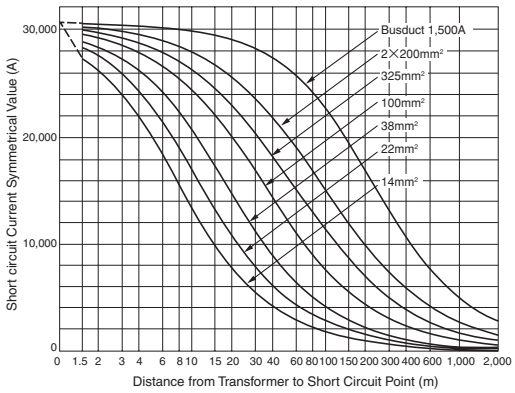

Graph. 12A

3-phase Transformer Capacity 1500kVA Secondary Voltage 200V

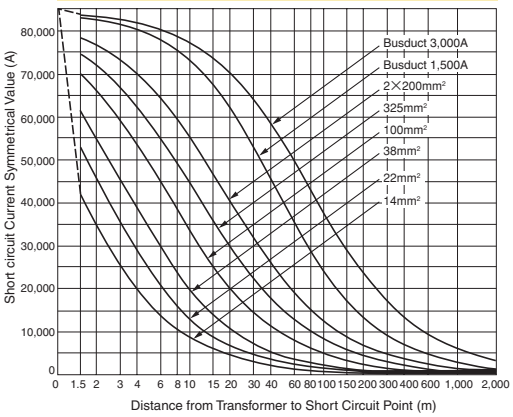

Graph. 12B

3-phase Transformer Capacity 1500kVA Secondary Voltage 415V

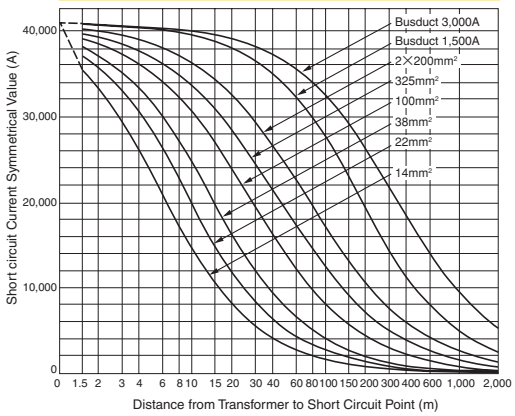

Graph. 13A

3-phase Transformer Capacity 2000kVA Secondary Voltage 200V

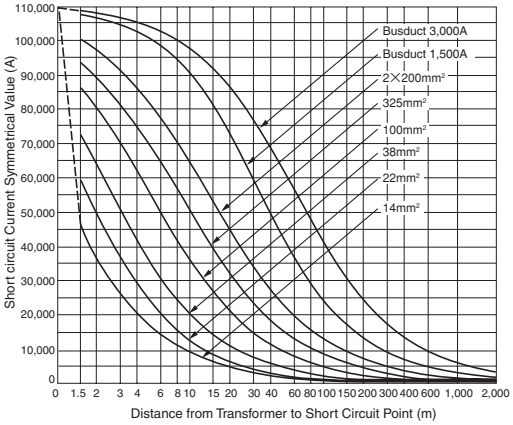

Graph. 13B

3-phase Transformer Capacity 2000kVA Secondary Voltage 415V

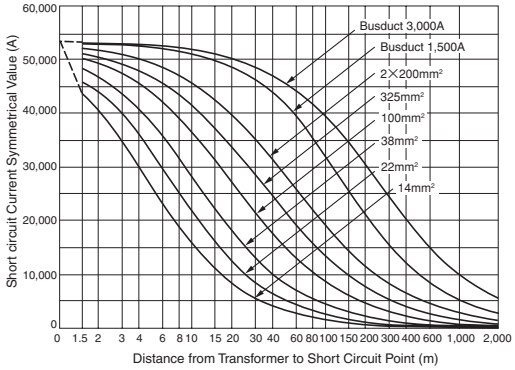

Short Circuit Current on a single phase 3-Wire System

It assumes that a short circuit has occurred at Point F of the electrical distribution system shown in Figure 14. Figure 15 shows an impedance diagram.

Fig.14 Elec. Dis. System

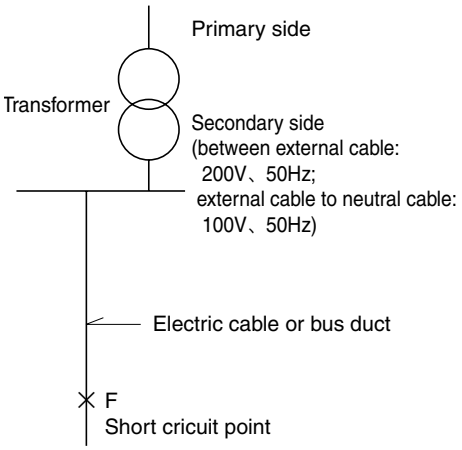

Fig.15 Impedance Diagram

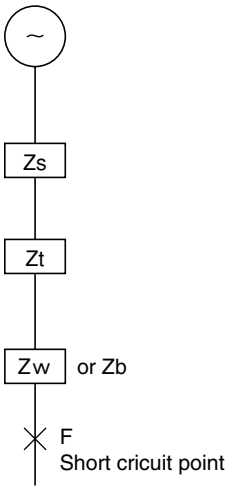

Zs： % impedance of power source
Zt： % impedance of transformer
Zw： % impedance of electric cable
Zb： % impedance of bus duct

1. Short Circuit Current Calculation

NOTE: Each impedance is calculated by taking the following value.

Percent impedance of power source (Zs)	Short circuit capacity of power source:500MVA. Xs/Rs = 25, Zs = 0.008 + j 0.1998 (%) (Converted to 1000kVA standard capacity)
Percent impedance of transformer (Zt)	(Converted to 1000kVA standard capacity. (Refer to Table 4).
Impedance of electric cable (Zw) Impedance of bus duct (Zb)	Refer to Table 2 and 3.(For electric wires, the values of a single core 6cm Distance at 50Hz are applied to the calculation example and reference graph.)

[The short circuit current at point F is calculated in the following conditions: Example]
Transformer Capacity 500kVA, Secondary side voltage 200/100V, Frequency 50Hz
Electric cable 2×200mm², 10m

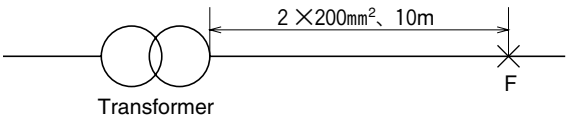

Total impedance of power source	$Z_A = Z_s + Z_t$ ——— Table 4 $= 2.408 + j\,9.5$ (%)	$Z_A = Z_s + Z_t$ ——— Table 4 $= 3.608 + j\,9.0$ (%)
Impedence of electric cable	Multiply the value in Table 2 by the cable length of 20m (both ways) and convert into the standard capacity of 1000kVA $Z_w = \frac{1000\times10^3}{200^2}\{\frac{1}{2}(0.092 + j0.134)\} \times10^{-3}\times20\times100 = 2.3 + j3.35$ (%)	$Z_w = \frac{1000\times10^3}{100^2}\{\frac{1}{2}(0.092 + j0.134)\} \times10^{-3}\times20\times100 = 9.2 + j13.4$ (%)
Total impedance	$Z = Z_A + Z_w = 4.708 + j12.85 = 13.685$ (%)	$Z = Z_A + Z_w = 12.808 + j22.4 = 25.803$ (%)
Symmetrical r.m.s. value of the short circuit current	$I_s = \frac{1000\times10^3}{200\times13.685}\times100 \fallingdotseq 36500$ (A)	$I_s = \frac{1000\times10^3}{100\times25.803}\times100 \fallingdotseq 38750$

Table 4. Impedance in a single phase 3-wire circuit (Converted to 1000kVA standard capacity)

Trans. Cap (kVA)	% impedance of Trans.Zt (%)		Total % if impedance of power source ZA (%)	
	Between external cables	External cables to neutral cables	Between external cables	External cables to neutral cables
10	210 +j106	290 +j110	210.008+j106.2	290.008+j110.2
20	90 +j71.5	135 +j65	90.008+j71.7	135.008+j65.2
30	51.67+j47.33	80 +j41.33	51.675+j47.5	80.008+j41.5
50	28 +j32.6	42 +j37.2	28.008+j32.8	42.008+j37.4
75	19.33+j32	32 +j35.73	19.341+j32.2	32.008+j35.9
100	14.5 +j25.1	22 +j28.6	14.508+j25.3	22.008+j28.8
150	9.0 +j18.67	13.33+j16.13	9.008+j18.9	13.341+j16.3
200	6.75+j16.7	10.0 +j14	6.758+j16.9	10.008+j14.2
300	4.17+j11.6	6.0 +j10.6	4.175+j11.8	6.008+j10.8
500	2.4 +j9.3	3.6 +j8.8	2.408+j9.5	3.608+j9.0

Note: $Z_A = Z_s + Z_t$

5 Calculation and Reference Graphs of the Short Circuit Current

2. Reference graph

For the corresponding transformer capacity and the secondary voltage,read the current value(amperage)at the crossing point of the scale, indicating the distance to the short circuit point and the curve of the electric cable size.

Graph. 16A Single Phase, 3 Wire Transformer Capacity 10kVA Between External Cables: 200V

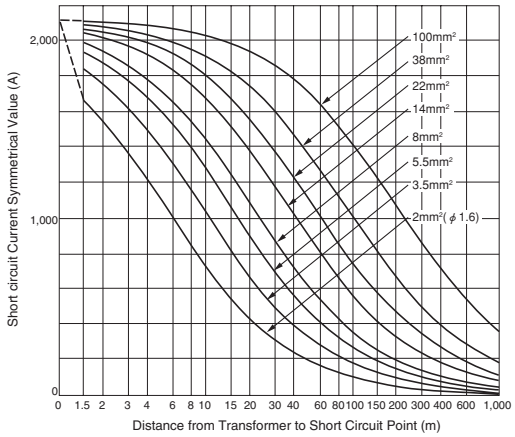

Graph. 16B Single Phase, 3 Wire Transformer Capacity 10kVA External Cable to Newtral Cable: 100V

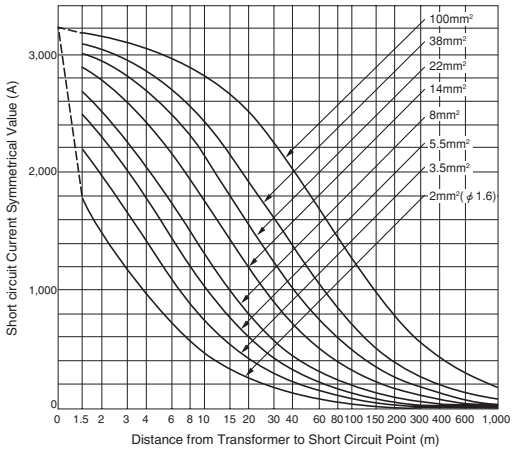

Graph. 17A Single Phase, 3 Wire Transformer Capacity 20kVA Between External Cables: 200V

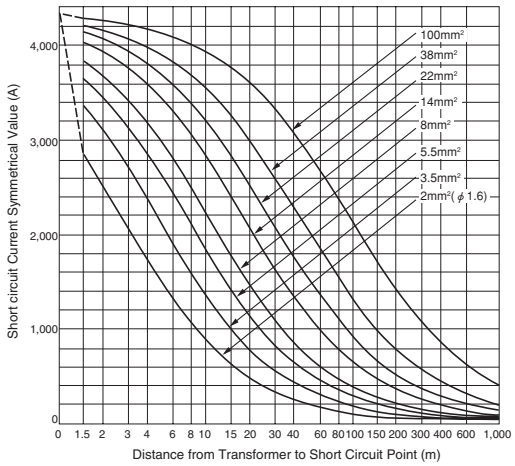

Graph. 17B Single Phase, 3 Wire Transformer Capacity 20kVA External Cable to Newtral Cable: 100V

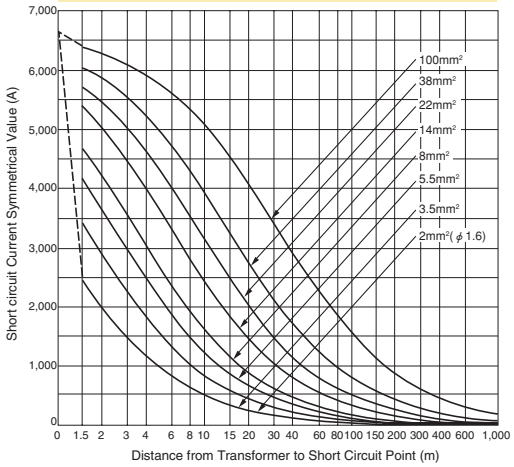

Graph. 18A Single Phase, 3 Wire Transformer Capacity 30kVA Between External Cables: 200V

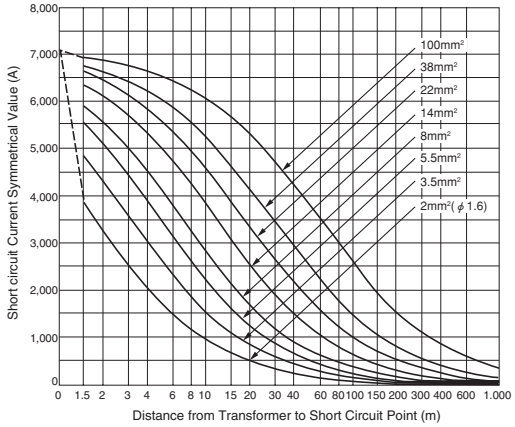

Graph. 18B Single Phase, 3 Wire Transformer Capacity 30kVA External Cable to Newtral Cable: 100V

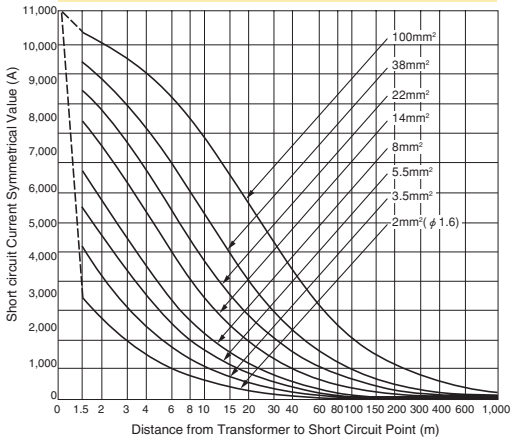

Graph. 19A Single Phase, 3 Wire Transformer Capacity 50kVA Between External Cables: 200V

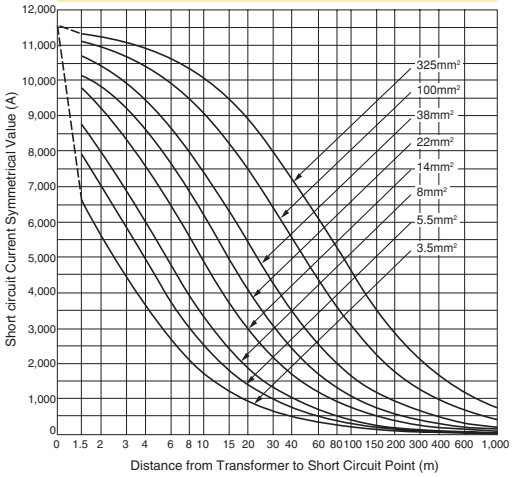

Graph. 19B Single Phase, 3 Wire Transformer Capacity 50kVA External Cable to Newtral Cable: 100V

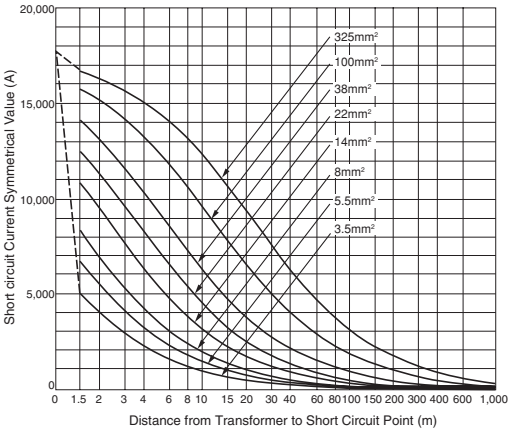

Graph. 20A Single Phase, 3 Wire Transformer Capacity 75kVA Between External Cables: 200V

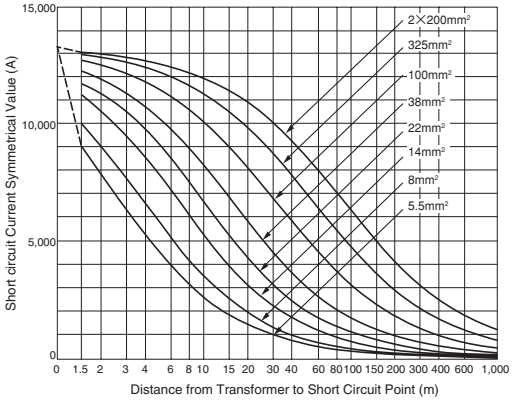

Graph. 20B Single Phase, 3 Wire Transformer Capacity 75kVA External Cable to Newtral Cable: 100V

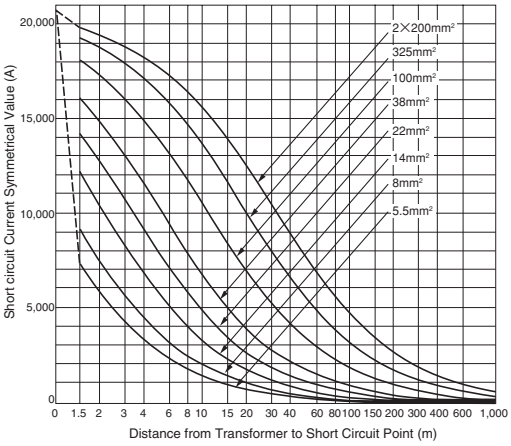

Graph. 21A Single Phase, 3 Wire Transformer Capacity 100kVA Between External Cables: 200V

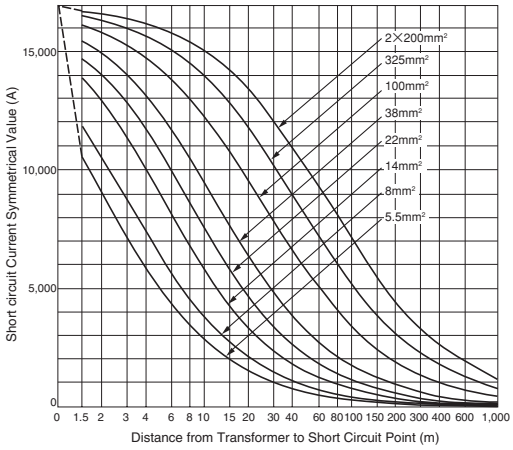

Graph. 21B Single Phase, 3 Wire Transformer Capacity 100kVA External Cable to Newtral Cable: 100V

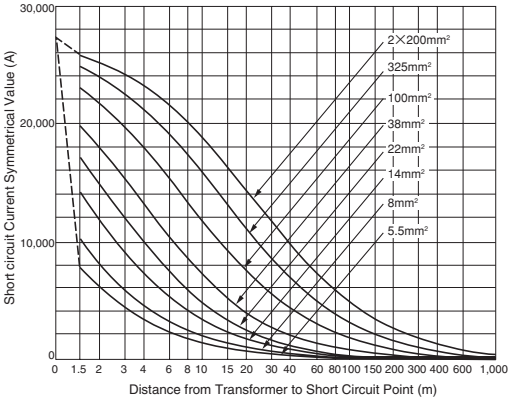

5 Calculation and Reference Graphs of the Short Circuit Current

Graph. 22A Single Phase, 3 Wire Transformer Capacity 150kVA Between External Cables: 200V

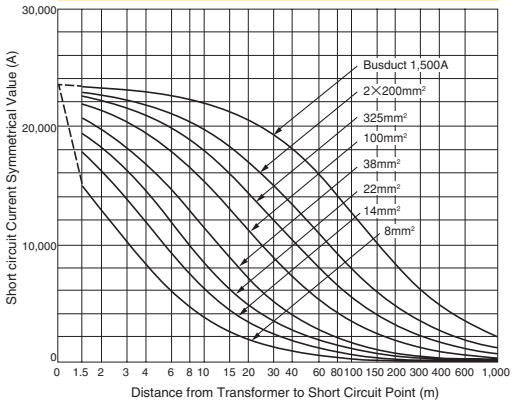

Graph. 22B Single Phase, 3 Wire Transformer Capacity 150kVA External Cable to Newtral Cable: 100V

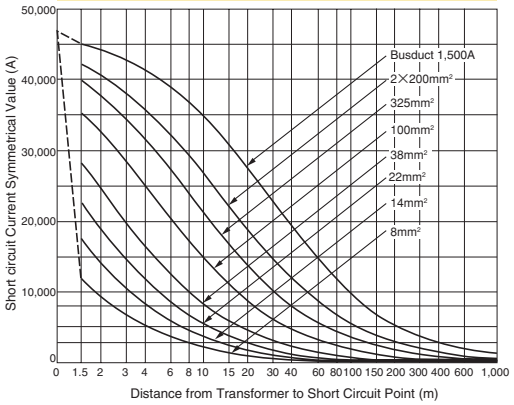

Graph. 23A Single Phase, 3 Wire Transformer Capacity 200kVA Between External Cables: 200V

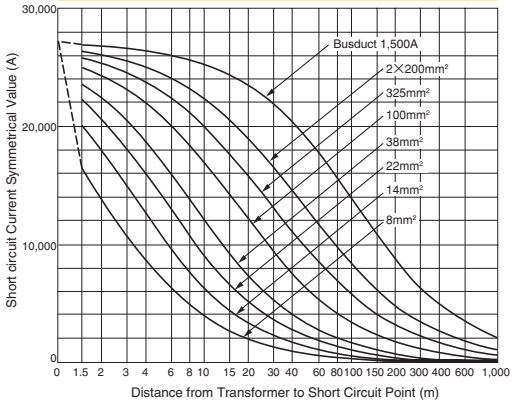

Graph. 23B Single Phase, 3 Wire Transformer Capacity 200kVA External Cable to Newtral Cable: 100V

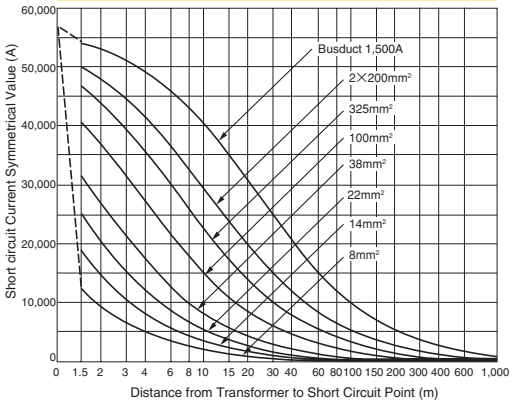

Graph. 24A Single Phase, 3 Wire Transformer Capacity 300kVA Between External Cables: 200V

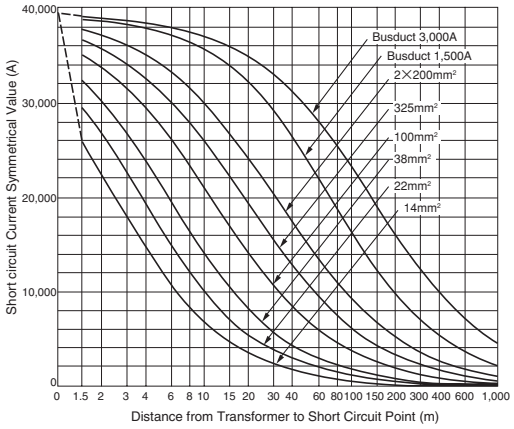

Graph. 24B Single Phase, 3 Wire Transformer Capacity 300kVA External Cable to Newtral Cable: 100V

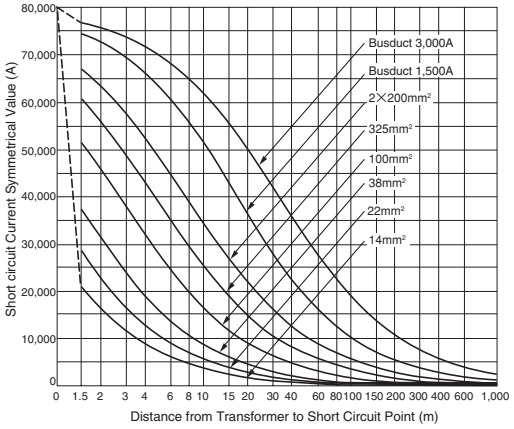

Graph. 25A Single Phase, 3 Wire Transformer Capacity 500kVA Between External Cables: 200V

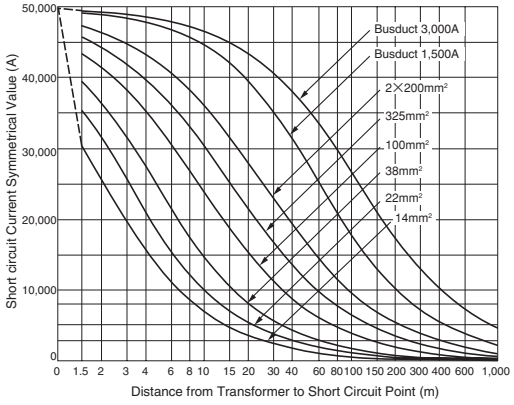

Graph. 25B Single Phase, 3 Wire Transformer Capacity 500kVA External Cable to Newtral Cable: 100V

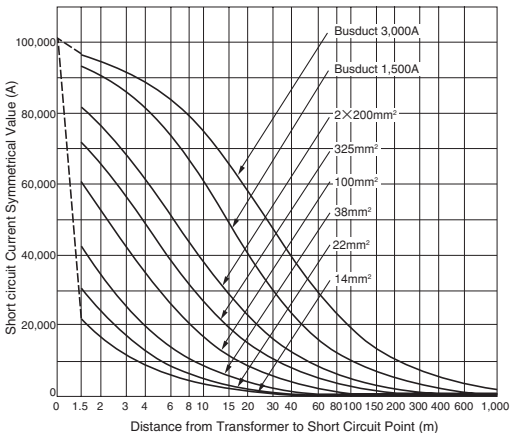

6 Order Form

1. Moulded Case Circuit Breakers

Moulded Case Circuit Breakers

Type
PS250-PF

- Economical series
- Standard series
- High-fault level series
- Current limiting standard series
- Current limiting High-fault level series
- Motor protection series
- Switch-disconnectors
- Circuit Breaker with Earth Leakage Alarm
- Single phase 3-wire circuit breaker with neutral phase open protection and earth leakage alarm
- Single phase 3-wire circuit breaker with neutral phase open protection

Number of poles
3

- 2 P
- 3 P
- 4 P

Mounting and Connection
RC-D

F C	Front-connected
F C (BAR)	Front-connected (When extension bars are attached as an option) ＊1
R C ＊2	Rear-connected
P M C	Plug-in (Standard) (Please order the required number of plug-in bases separately)
P M B	Plug-in (High-performance) (Please order the required number of plug-in bases separately)
P M D	Plug-in (For distribution mode) (Please order the required number of plug-in bases separately)
D R	Draw-out
F P ＊2	Flush-mounted
P G	TemPlug70

＊1 : Extension bars of 250 A frame or less are supplied separately.
＊2 : Specify the orientation of the flat bar stud on the line/load side.

A	Line side-Vertical, Load side-Horizontal
B	Line side-Horizontal, Load side-Vertical
C	Line side-Vertical, Load side-Vertical
D	Line side-Horizontal, Load side-Horizontal

Rated current
225A

For DC specifications, specify the rated voltage.
V DC

Sensitivity current

- 30mA
- 100/200/500mA selectable

Please specify whether you require an earth leakage alarm.

Accessory
AX1C

Accessories(Optional)

	symbol	Type	Specified items / other
Internally Mounted	A X	Auxiliary switch	C
	A L	Alarm switch	C
	S H	Shunt trip	V AC/DC Hz
	U V	Under voltage trip	V AC/DC Hz
Externally mounted	M C	Motor operators	V AC/DC
	H B	External operating handles	Breaker-mounted
	H P		Door-mounted
	M S	Mechanical interlock	Slide type(Breaker-mounted)
	M B		Rear-connected type
	M L		Link type
	MW		Wire type
	H H	Toggle holder	
	H L	Toggle lock	
	C F	Terminal cover	For front-connected
	C R		For rear-connected and plug-in
	C S		For front-connected type with cable clamps
	B A	Interpole barrier	
	T F	Terminal block for lead	
	D F	Door flange	

Quantity
10

2.Moulded Case Circuit Breakers TPOT type, TPOP type electronic OCR

Electronic breakers

Type
PS250-NE

Standard series
High-fault level series
Current limiting standard series
Current limiting High-fault level series

Number of poles
3

3 P
4 P

Mounting and Connection
RC-C

F C	Front-connected
F C (BAR)	Front-connected (When extension bars are attached as an option) ＊1
R C ＊2	Rear-connected
P M C ＊3	Plug-in (Standard) (Please order the required number of plug-in bases separately)
P M B ＊3	Plug-in (High-performance) (Please order the required number of plug-in bases separately)
P M D ＊4	Plug-in (For distribution mode) (Please order the required number of plug-in bases separately)
D R	Draw-out
F P ＊2	Flush-mounted
P G	TemPlug70

＊1 : Extension bars of 250A frame or less are supplied separately.
＊2 : Specify the orientation of the flat bar stud on the line/load side.

A	Line side-Vertical, Load side-Horizontal
B	Line side-Horizontal, Load side-Vertical
C	Line side-Vertical, Load side-Vertical
D	Line side-Horizontal, Load side-Horizontal

＊3 : PS630-NE and PS630-GE are not supported.
＊4 : PMD can be specified only for PS125-NE and PS125-PE 3 poles.

Rated current
250A

Overcurrent trip device OCR type
TPOT

OCR type	Protective functions			Alarm function
	Long time, Short time, Instantaneous	Ground fault	Neutral protection	Preferential trip alarm
TPOT (LSI)	●	—	—	●
TPOP (LSIG)	●	● ＊5	● ＊6	●

＊5 : 3-pole breakers support 3Φ3W only.
＊6 : Not compatible with 100A or less.

Accessory
UV 220V AC

Accessories(Optional)			
	symbol	Type	Specified items/other
Internally Mounted	A X	Auxiliary switch	C
	A L	Alarm switch	C
	S H	Shunt trip	V AC/DC Hz
	U V	Under voltage trip	V AC/DC Hz
Externally mounted	M C	Motor operators	V AC/DC
	H B	External operating handles	Breaker-mounted
	H P		Door-mounted
	M S	Mechanical interlock	Slide type(Breaker-mounted)
	M B		Rear-connected type
	M L		Link type
	MW		Wire type
	H H	Toggle holder	
	H L	Toggle lock	
	C F	Terminal cover	For front-connected
	C R		For rear-connected and plug-in
	C S		For front-connected type with cable clamps
	B A	Interpole barrier	
	T F	Terminal block for lead	
	D F	Door flange	

Quantity
8

3.Moulded Case Circuit Breakers TPOU type electronic OCR (smart circuit breakers)

Electronic breakers

Type
PS400-NE

Standard series
High-fault level series
Current limiting standard series
Current limiting High-fault level series

Number of poles
3

3 P
4 P

Mounting and Connection
RC-C

F C	Front-connected
F C (BAR)	Front-connected (When extension bars are attached as an option) ＊1
R C ＊2	Rear-connected
P M C ＊3	Plug-in (Standard) (Please order the required number of plug-in bases separately)
P M B ＊3	Plug-in (High-performance) (Please order the required number of plug-in bases separately)
P M D ＊4	Plug-in (For distribution mode) (Please order the required number of plug-in bases separately)
D R	Draw-out
F P ＊2	Flush-mounted
P G	TemPlug70

＊1 : Extension bars of 250A frame or less are supplied separately.
＊2 : Specify the orientation of the flat bar stud on the line/load side.

A	Line side-Vertical, Load side-Horizontal
B	Line side-Horizontal, Load side-Vertical
C	Line side-Vertical, Load side-Vertical
D	Line side-Horizontal, Load side-Horizontal

＊3 : PS630-NE and PS630-GE are not supported.
＊4 : PMD can be specified only for PS125-NE and PS125-PE 3 poles.

Rated current
400A

Overcurrent trip device OCR type
TPOU

TPOU (SMART)	Protective functions	Long time, Short time, Instantaneous	●
		Ground fault	● ＊5
		Neutral protection	● ＊6
		Zone interlock	●
	Alarm function	Preferential trip alarm	●
	Measurement/display function		●
	Communication function		●

＊5 : 3-pole breakers support 3Φ3W only.
＊6 : Not compatible with 100A or less.

Accessory
UV 220V AC

Accessories(Optional)			
	symbol	Type	Specified items/other
Internally Mounted	A X	Auxiliary switch	C
	A L	Alarm switch	C
	S H	Shunt trip	V AC/DC Hz
	U V	Under voltage trip	V AC/DC Hz
Externally mounted	M C	Motor operators	V AC/DC
	H B	External operating handles	Breaker-mounted
	H P		Door-mounted
	M S	Mechanical interlock	Slide type(Breaker-mounted)
	M B		Rear-connected type
	M L		Link type
	MW		Wire type
	H H	Toggle holder	
	H L	Toggle lock	
	C F	Terminal cover	For front-connected
	C R		For rear-connected and plug-in
	C S		For front-connected type with cable clamps
	B A	Interpole barrier	
	T F	Terminal block for lead	
	D F	Door flange	

Quantity
8

4.Moulded Case Circuit Breakers XOU electronic OCR

Electronic breakers

Type
H400-NE

Standard series
High-fault level series
Current limiting standard series
Current limiting High-fault level series

Number of poles
3

3 P
4 P

Mounting and Connection
FC

F C	Front-connected
F C (BAR)	Front-connected (When extension bars are attached as an option)
R C ＊1	Rear-connected
P M C ＊2	Plug-in (Standard) (Please order the required number of plug-in bases separately)
P M B ＊3	Plug-in (High-performance) (Please order the required number of plug-in bases separately)
D R	Draw-out
F P ＊1	Flush-mounted
P G	TemPlug70

＊1 : Specify the orientation of the flat bar stud on the line/load side.

A	Line side-Vertical, Load side-Horizontal
B	Line side-Horizontal, Load side-Vertical
C	Line side-Vertical, Load side-Vertical
D	Line side-Horizontal, Load side-Horizontal

＊2 : 4-pole type breakers, S1000-CE and S1600-NE are not supported.
＊3 : Models above 1000AF are supported.

Rated current
400A

Overcurrent trip device protection code
APG

OCR controller control power supply
110V AC

A [ ] [ ] [ ]
- N : Neutral protection
- G : Ground falut trip
- P : Preferential trip alarm

See page 6-6 for applications.
Note: When "P" is applied, specify the control power supply.

Overcurrent trip characteristics
4

Characteristics	Type
1	Generator protection characteristics
2	General protection characteristics
3	General protection characteristics
4	General protection characteristics
5	Motor protection characteristics
6	Motor protection characteristics
7	Motor protection characteristics

Accessory
SH 110V AC

Accessories (Optional)

	symbol	Type	Specified items / other
Internally Mounted	A X	Auxiliary switch	C
	A L	Alarm switch	C
	S H	Shunt trip	V AC/DC Hz
	U V	Under voltage trip	V AC/DC Hz
Externally mounted	M C	Motor operators	V AC/DC
	H B	External operating handles	Breaker-mounted
	H P		Door-mounted
	M S	Mechanical interlock	Slide type (Breaker-mounted)
	M B		Rear-connected type
	M L		Link type
	MW		Wire type
	H H	Toggle holder	
	H L	Toggle lock	
	C F	Terminal cover	For front-connected
	C R		For rear-connected and plug-in
	C S		For front-connected type with cable clamps
	B A	Interpole barrier	
	T F	Terminal block for lead	
	D F	Door flange	

Quantity
12

5.Moulded Case Circuit Breakers XOW electronic OCR (high-performance type)

Electronic breakers

Type
S800-NE

Standard series
High-fault level series
Current limiting standard series
Current limiting High-fault level series

Number of poles
3

3 P
4 P

Mounting and Connection
RC-C

F C	Front-connected
F C (BAR)	Front-connected (When extension bars are attached as an option)
R C ＊1	Rear-connected
P M C ＊2	Plug-in (Standard) (Please order the required number of plug-in bases separately)
P M B ＊2	Plug-in (High-performance) (Please order the required number of plug-in bases separately)
D R	Draw-out
F P ＊1	Flush-mounted
P G	TemPlug70

＊1 : Specify the orientation of the flat bar stud on the line/load side.

A	Line side-Vertical, Load side-Horizontal
B	Line side-Horizontal, Load side-Vertical
C	Line side-Vertical, Load side-Vertical
D	Line side-Horizontal, Load side-Horizontal

＊2 : 4-pole type breakers and S1000-CE are not supported.

Rated current
800A

Overcurrent trip device OCR type
XOW-1L-AP

OCR controller control power supply
220V AC

OCR type	OCR controller control power supply
XOW-1L-A	100-120V AC or 200-240V AC
XOW-1L-AGN	
XOW-1L-AP	
XOW-1L-APGNS	
XOW-1L-APC	
XOW-1L-APGNSC	
XOW-1S-A	
XOW-1S-AGN	
XOW-1S-AP	
XOW-1S-APGNS	
XOW-1S-APCWH	
XOW-1S-APGNSCWH	

LCD display window mounting orientation
Vertical ON side upper

LCD display window mounting orientation
Vertical ON side upper (standard)
Horizontal ON side right
Horizontal ON side left

Accessory
UV 220V AC

Accessories(Optional)

	symbol	Type	Specified items / other
Internally Mounted	A X	Auxiliary switch	C
	A L	Alarm switch	C
	S H	Shunt trip	V AC/DC Hz
	U V	Under voltage trip	V AC/DC Hz
Externally mounted	M C	Motor operators	V AC/DC
	H B	External operating handles	Breaker-mounted
	H P		Door-mounted
	M S	Mechanical interlock	Slide type (Breaker-mounted)
	M B		Rear-connected type
	M L		Link type
	MW		Wire type
	H H	Toggle holder	
	H L	Toggle lock	
	C F	Terminal cover	For front-connected
	C R		For rear-connected and plug-in
	C S		For front-connected type with cable clamps
	B A	Interpole barrier	
	T F	Terminal block for lead	
	D F	Door flange	

Quantity
8

6.Moulded Case Circuit Breakers XOS electronic OCR

Electronic breakers

Type
XS2000NE

Standard series
High-fault level series
Current limiting standard series
Current limiting High-fault level series

Number of poles
3

3 P
4 P

Mounting and Connection
FC

F C	Front-connected
F C (BAR)	Front-connected (When extension bars are attached as an option)
R C ＊1	Rear-connected
P M	Plug-in (Please order the required number of plug-in bases separately)
D R	Draw-out
F P ＊1	Flush-mounted
P G	TemPlug70

＊1 : Specify the orientation of the flat bar stud on the line/load side.

A	Line side-Vertical, Load side-Horizontal
B	Line side-Horizontal, Load side-Vertical
C	Line side-Vertical, Load side-Vertical
D	Line side-Horizontal, Load side-Horizontal

Rated current
2000A

Overcurrent trip device protection code
AP

OCR controller control power supply
100V AC

A [ ] [ ] [ ]

- I : Trip indicator
- G : Ground falut trip
- P : Preferential trip alarm
- H : High Instantaneous Trip (See page 4-4)
- A : With long time, short time, instantaneous (standard product)

Please specify if necessary. (See page 6-10 for applications) If not required, you do not need to fill it out.

Note: When "I" or "P" is applied, specify the control power supply.

Accessory
SH 100V AC

Accessories(Optional)

	symbol	Type	Specified items / other
Internally Mounted	A X	Auxiliary switch	C
	A L	Alarm switch	C
	S H	Shunt trip	V AC/DC Hz
	U V	Under voltage trip	V AC/DC Hz
Externally mounted	M B	Mechanical interlock	Rear-connected type
	T F	Terminal block for lead	
	D F	Door flange	

Quantity
5

7.Moulded Case Circuit Breakers TB series for distribution boards

Type
TB-5S

TB-5S	For general distribution boards
TB-5P	Plug-in type (line side only)
TB-5D	Plug-in type
TB-51C	Mini size
TB-52C	Mini size

Number of poles
3

1 P
2 P
3 P
4 P

Mounting
Clip-in chassis

Clip A (standard accessory)	
Clip-in chassis	
Mounting base for single-row installation / Branching bars	See page 7-170 for details. (TB-5P, TB-5D)
Mounting base for branched-into-dual-rows / Branching bars	
Branching bars	See page 7-168 to 7-169 for details. (TB-51C, TB-52C)
Busbar conductor support	

Calibrated temperature
40℃

40℃	General use
45℃	Marine use

Rated current
75A

Accessories
Toggle lock

HH	Toggle holder	Required	Not required
HL	Toggle lock	Required	Not required
HC	Toggle cap	Required	Not required

Quantity
10

8.Earth Leakage Circuit Breakers

Earth Leakage Circuit Breakers

Type
2S100-GF

Economical series
Standard series
High-fault level series
Earth Leakage Circuit Breakers for motor protection
Single phase 3-wire earth leakage circuit breaker with neutral phase open protection

Number of poles
3

3 P
4 P

Mounting and Connection
FP-D

F C	Front-connected
F C (BAR)	Front-connected (When extension bars are attached as an option)
R C ＊1	Rear-connected
F P ＊1	Flush-mounted
P G	TemPlug70

＊1 : Specify the orientation of the flat bar stud on the line/load side.

A	Line side-Vertical, Load side-Horizontal
B	Line side-Horizontal, Load side-Vertical
C	Line side-Vertical, Load side-Vertical
D	Line side-Horizontal, Load side-Horizontal

Rated current
100A

Sensitivity current
100/200/500mA

15mA	For electric shock prevention
30mA	
100mA	For electric leakage fire prevention and for electric shock prevention by grounding equipment together
100/200mA selectable	
100/200/500mA selectable	

Please enter "time delay type" or "Instantaneous tripping type"
time delay type

Accessory
AL 1C

Accessories(Optional)

	symbol	Type	Specified items / other
Internally Mounted	A X	Auxiliary switch	C
	A L	Alarm switch	C
	T L	Test lead	
	M G	Megger test switch	
Externally mounted	M C	Motor operators	V AC/DC
	H B	External operating handles	Breaker-mounted
	H P		Door-mounted
	M S	Mechanical interlock	Slide type (Breaker-mounted)
	M L		Link type
	MW		Wire type
	H H	Toggle holder	
	H L	Toggle lock	
	C F	Terminal cover	For front-connected
	C R		For rear-connected and plug-in
	C S		For front-connected type with cable clamps
	B A	Interpole barrier	
	T F	Terminal block for lead	
	D F	Door flange	

Quantity
15

9. Earth Leakage Relays TZS series

(Separate type)

Type

TZS-100HD

HD	High-sensitivity Instantaneous tripping type
MD	Medium sensitivity Instantaneous tripping / time delay tripping type

Mounting and Connection

FC

FC	Front-connected
FP	Flush-mounted

Rated control voltage

100V-200V

100-200V	Selection type
415-440V	Custom-built.

Sensitivity current

30mA

HD	30mA
MD	100 / 200 / 500 / 1000mA selectable

Remarks (1) Sensitivity current switching type is set to 100mA before delivery.

Please enter the time delay time only for the medium sensitivity high speed/time delay type.

MD	0.1 or less / 0.3 / 0.5 / 1.0 / 2 seconds switching

Remarks (2) The time delay switching type is set to 0.1 or less before delivery.

Quantity

2

Remarks (3) Delivered as a set together with an earth leakage monitor (ZCT).
The type display on the relay body is TZS-HD or TZS-MD.

10. Internal accessory order type

The following internal accessories are parts that can be mounted with one touch. They make it possible to quickly respond to emergencies and specification changes. When ordering, please specify the type ordered and quantity.

Internally mounted accessories	Breaker		Specification		Accessory order type ①
	Moulded Case Circuit Breakers	Earth Leakage Circuit Breakers			
Auxiliary switch (AX)	E30-NM, S30-NM, E50-NM, S50-NM, E100-NM	ZE30-NM, ZS30-NM, ZE50-NM, ZS50-CM, ZE100-NM	Standard	1C contact. Left side mounting	AX05WL3SW ③
				1C contact. Right side mounting	AX05WR3SW ③
			For microload	1C contact. Left side mounting	AX05WL3RW ③
				1C contact. Right side mounting	AX05WR3RW ③
	PE30-NF/NN, PS30-NF, PE50-NF/NN/NFZ/NFN, PS50-NF/NFZ, PE60-NF, PS60-NF, PE125-NF/NN/NFZ/NFN, S50-SF, S125-SF, S125-SN, NAE125-SF, NAS125-SF, ZAS125-SF, NS125-SF, PS50-PF, PS125-NF/PF/NM/NN, PS125-NE/PE, E250-SF, S250-SF, S250-SM, S250-SN, ZAE250-SF, ZAS250-SF, NAE250-SF, NAS250-SF, NE250-SF, NS250-SF, PS250-PF/NN, PS250-NE/PE, PS400-CF/NF/GF/NN, PS400-NE/GE, PH400-CF, PH400-CE, PS630-CF/NF/GF/NN, PS630-NE/GE, PH630-CF, PH630-CE	PZE30-NF, PZS30-NF, PZE50-NF/NFN, PZS50-NF, PZE60-NF, PZS60-NF, PZE125-NF/NFN, ZS50-SF, ZS125-SF, ZS100-SM, ZNS125-SF, ZE250-SF, ZS250-SF, ZS250-SM, ZNE250-SF, ZNS250-SF	Standard ②	1C contact	AX00LML3SW
				2C contact	AX00LML4SW
			For microload ②	1C contact	AX00LML3RW
				2C contact	AX00LML4RW
	S100-GF, S125-GF, ZAS50-GF, ZAS100-GF, ZAS125-GF, H100-NF, H125-NF, H225-NF, H225-NE, H250-NF, L100-NF, L125-NF, L225-NF, L250-NF, ZAS225-GF, ZAS250-GF, H400-NE, L400-NE, E400-NF, ZAE400-NF, ZAS400-NF/GF, NAE400-NF, NAS400-NF, NE400-NF, NS400-NF, NS630-NF, NS800-NF, S630-CF/NF/NE/GN, ZAS630-CF/NF, H630-NE, L630-NE, S800-CF/NF/RF/PF/NN, S800-NE/RE/PE, H800-NE, L800-NE, ZAS800-CF/NF, S1000-CE/NN, S1250-NE/GE/NN, S1600-NE/NN	ZS100-GF, ZS125-GF, ZS225-GF, ZS250-GF, ZE400-NF, ZS400-NF/GF, ZNE400-NF, ZNS400-NF, ZS630-CF, ZS630-NF, ZS800-CF, ZS800-NF	Standard②	1C contact	AX00M3SW
				2C contact	AX00M4SW
				3C contact	AX00M5SW
				4C contact	AX00M6SW
			For microload ②	1C contact	AX00M3RW
				2C contact	AX00M4RW
				3C contact	AX00M5RW
				4C contact	AX00M6RW
Alarm switch (AL)	E30-NM, S30-NM, E50-NM, S50-NM, E100-NM	ZE30-NM, ZS30-NM, ZE50-NM, ZS50-CM, ZE100-NM	Standard	1C contact. Left side mounting	AL05KL3SW ③
				1C contact. Right side mounting	AL05KR3SW ③
			For microload	1C contact. Left side mounting	AL05KL3RW ③
				1C contact. Right side mounting	AL05KR3RW ③
	PE30-NF/NN, PS30-NF, PE50-NF/NN/NFZ/NFN, PS50-NF/NFZ, PE60-NF, PS60-NF, PE125-NF/NN/NFZ/NFN, S50-SF, S125-SF, S125-SN, NAE125-SF, NAS125-SF, ZAS125-SF, NS125-SF, PS50-PF, PS125-NF/PF/NM/NN, PS125-NE/PE, E250-SF, S250-SF, S250-SM, S250-SN, ZAE250-SF, ZAS250-SF, NAE250-SF, NAS250-SF, NE250-SF, NS250-SF, PS250-PF/NN, PS250-NE/PE, PS400-CF/NF/GF/NN, PS400-NE/GE, PH400-CF, PH400-CE, PS630-CF/NF/GF/NN, PS630-NE/GE, PH630-CF, PH630-CE	PZE30-NF, PZS30-NF, PZE50-NF/NFN, PZS50-NF, PZE60-NF, PZS60-NF, PZE125-NF/NFN, ZS50-SF, ZS125-SF, ZS100-SM, ZNS125-SF, ZE250-SF, ZS250-SF, ZS250-SM, ZNE250-SF, ZNS250-SF	Standard	1C contact. Left side mounting	AL00LML3SW
				2C contact. Right side mounting	AL00LMR4SW
			For microload	1C contact. Left side mounting	AL00LML3RW
				2C contact. Right side mounting	AL00LMR4RW
	S100-GF, S125-GF, ZAS50-GF, ZAS100-GF, ZAS125-GF, H100-NF, H125-NF, H225-NF, H225-NE, H250-NF, L100-NF, L125-NF, L225-NF, L250-NF, ZAS225-GF, ZAS250-GF, H400-NE, L400-NE, E400-NF, ZAE400-NF, ZAS400-NF/GF, NAE400-NF, NAS400-NF, NE400-NF, NS400-NF, NS630-NF, NS800-NF, S630-CF/NF/NE/GN, ZAS630-CF/NF, H630-NE, L630-NE, S800-CF/NF/RF/PF/NN, S800-NE/RE/PE, H800-NE, L800-NE, ZAS800-CF/NF, S1000-CE/NN, S1250-NE/GE/NN, S1600-NE/NN	ZS100-GF, ZS125-GF, ZS225-GF, ZS250-GF, ZE400-NF, ZS400-NF/GF, ZNE400-NF, ZNS400-NF, ZS630-CF, ZS630-NF, ZS800-CF, ZS800-NF	Standard	1C contact	AL00M3SW
			For microload	1C contact	AL00M3RW

Notes ① : All internal accessories are for lead wire draw-out.
② : 2C to 4C contacts do not mean there are 2 to 4 switches, but one switch on the 2nd C, 3rd C, and 4th C with ring marks labeled 2C, 3C, 4C. For auxiliary switches or alarm switches, left-hand mounting has priority.
③ : Circuit breakers with undervoltage trip cannot be retrofitted with an auxiliary switch or alarm switch by the customer.

Internally mounted accessories	Breaker Moulded Case Circuit Breakers	Specification		Accessory order type ①
Shunt trip (SH)	**E30-NM, S30-NM, E50-NM, S50-NM, E100-NM**	100−120V AC / 100−110V DC		SH05A10W
		200−240V AC		SH05A20W
		380−450V AC		SH05A40W
	PE30-NF/NN, PS30-NF, PE50-NF/NN, PS50-NF, PE60-NF, PS60-NF, PE125-NF/NN, S50-SF, S125-SF, S125-SN, PS50-PF, PS125-NF/PF/NM/NN, PS125-NE/PE, E250-SF, S250-SF, S250-SM/SN, PS250-PF/NN, PS250-NE/PE, PS400-CF/NF/GF/NN, PS400-NE/GE, PH400-CF, PH400-CE, PS630-CF/NF/GF/NN, PS630-NE/GE, PH630-CF, PH630-CE	100−120V AC		SH00LA10W
		200−240V AC		SH00LA20W
		380−450V AC		SH00LA40W
		24V DC		SH00LD02W
		48V DC		SH00LD04W
		100−120V DC		SH00LD10W
		200−240V DC		SH00LD20W
	S100-GF, S125-GF, H100-NF, H125-NF, H225-NF/NE, H250-NF, L100-NF, L125-NF, L225-NF, L250-NF, H400-NE, L400-NE, E400-NF	100−120V AC		SH00A10W
		200−240V AC		SH00A20W
		380−450V AC		SH00A40W
		24V DC		SH00D02W
		48V DC		SH00D04W
		100−120V DC		SH00D10W
		200−240V DC		SH00D20W
	S630-CF/NF/NE/GN, H630-NE, L630-NE, S800-CF/NF/RF/PF/NN, S800-NE/RE/PE, H800-NE, L800-NE, S1000-CE/NN	100−120V AC		SH80A10W
		200−240V AC		SH80A20W
		380−450V AC		SH80A40W
		24V DC		SH80D02W
		48V DC		SH80D04W
		100−120V DC		SH80D10W
		200−240V DC		SH80D20W
	S1250-NE/GE/NN, S1600-NE/NN	100−120V AC		SHX6A10W
		200−240V AC		SHX6A20W
		380−450V AC		SHX6A40W
		24V DC		SHX6D02W
		48V DC		SHX6D04W
		100−120V DC		SHX6D10W
		200−240V DC		SHX6D20W
Under voltage trip (UV)	**PE30-NF/NN, PS30-NF, PE50-NF/NN, PS50-NF, PE60-NF, PS60-NF, PE125-NF/NN, S50-SF, S125-SF, S125-SN, PS50-PF, PS125-NF/PF/NM/NN, PS125-NE/PE, E250-SF, S250-SF, S250-SM/SN, PS250-PF/NN, PS250-NE/PE, PS400-CF/NF/GF/NN, PS400-NE/GE, PH400-CF, PH400-CE, PS630-CF/NF/GF/NN, PS630-NE/GE, PH630-CF, PH630-CE**	Instantaneous type	100−120V AC	UV00LA10NW
			200−240V AC	UV00LA20NW
			380−450V AC	UV00LA40NW
			24V DC	UV00LD02NW
			100−120V DC	UV00LD10NW
			200−240V DC	UV00LD20NW
	S100-GF, S125-GF, H100-NF, H125-NF, H225-NF/NE, H250-NF, L100-NF, L125-NF, L225-NF, L250-NF, H400-NE, L400-NE, E400-NF	Instantaneous type	100−120V AC	UV00A10NW
			200−240V AC	UV00A20NW
			380−450V AC	UV00A40NW
			24V DC	UV00D02NW
			100−120V DC	UV00D10NW
			200−240V DC	UV00D20NW
	S630-CF/NF/NE/GN, H630-NE, L630-NE, S800-CF/NF/RF/PF/NN, S800-NE/RE/PE, H800-NE, L800-NE, S1000-CE/NN, S1250-NE/GE/NN, S1600-NE/NN	Instantaneous type	100−110V AC	UV80A10NW
			115−120V AC	UV80A12NW
			200−220V AC	UV80A20NW
			230−240V AC	UV80A24NW
			380−415V AC	UV80A40NW
			440−450V AC	UV80A45NW
			24V DC	UV80D02NW
			100−120V DC	UV80D10NW
			200−240V DC	UV80D20NW

Note ① : All internal accessories are for lead wire draw-out.

10 TemPlug

Proposal for the Rationalisation of Switchboards and Distribution Boards ····· 10-2

TemPlug70

1 Features ····· 10-3

2 Outline dimensions ····· 10-4

T2PG05LS (50A Frame) ····· 10-4
T2PG12LS (100, 125A Frame) ····· 10-4
T2PG12S (50, 100, 125A Frame) ····· 10-4
TPPG12S (50, 100, 125A Frame) ····· 10-5
T2PG25LS (225, 250A Frame) ····· 10-5
T2PG25S (225, 250A Frame) ····· 10-6
T2PG40S (400A Frame) ····· 10-6
TPPG40S (400A Frame) ····· 10-7
T2PG63S (600, 630A Frame) ····· 10-7

3 Specifications ····· 10-8

4 Option ····· 10-8

Blank cover ····· 10-8
Busbar support ····· 10-9
Busbar unit ····· 10-10

5 Circuit breaker arrangement example ····· 10-11

6 Order Form ····· 10-12

7 Use case ····· 10-13

Proposal for the Rationalisation of Switchboards and Distribution Boards

Switchboard Contractors | **End Users (including contractors)** | **Design offices**

Shortening of production time

Eliminates the onerous task of fabricating and installing branching busbars. Can significantly shorten working time and shorten the lead time to the completion of the switchboard.

Standardisation of switchboards

The size of the main busbar is determined by the power supply capacity, so it is possible to standardize the switchboards with the same capacity.

Improved safety by separating blocks

With *TemPlug* the busbar block and circuit breaker block can be separated to create a safer switchboard.

∗ A standard busbar support is prepared to keep the assembly accuracy of the busbar.

Flexibility to change specifications

Even if the frame size or rated current of the circuit breaker is changed, all you have to do is to replace the *TemPlug*

∗ Be sure to turn off the circuit breaker when inserting or removing the *TemPlug*

Miniaturisation of the switchboard

TemPlug plugs directly into the main busbar, so no space is needed for the branching busbar.

Standardisation of phase order

If the main busbar is R, S, T from the left, the phase order of the load side can be standardized to R, S, T from the top, regardless of the orientation of the circuit breaker installation.

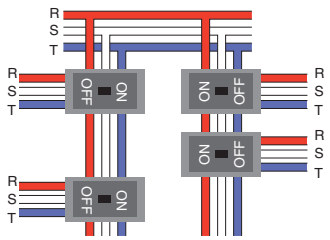

Standardisation of busbar specifications

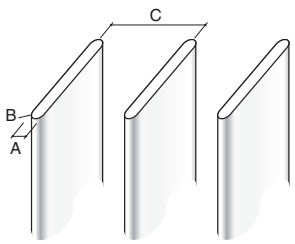

Full round shape
R5

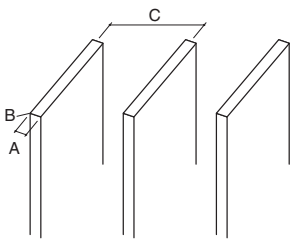

Square
R0.9

	TemPlug70 (PG Series)
Busbar thickness (A)	10mm
Busbar type (B)	Full round shape R5 or square R0.9
Interphase pitch (C)	70±0.5mm
Surface treatment	Sn plating or Ag plating
Busbar support	We recommend the use of a dedicated support (BST70).

TemPlug 70

PG Series

Simply plug the *TemPlug* into the main busbar to complete the connection !
Aligned with the handle centreline, no need for height adjustment due to standardized depth dimensions.
We can help you miniaturize, standardize, and shorten the production time for 21st century switchboards and distribution boards.

Miniaturisation and time reduction

Branching busbars do not need to be fabricated and the width of the switchboard can be reduced.

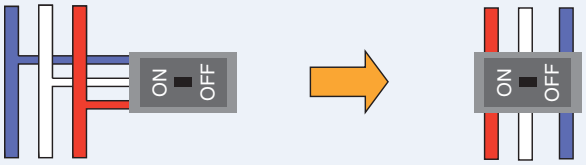

When using *TemPlug*

Standardisation & Flexibility

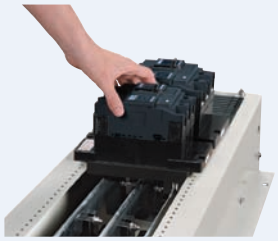

The 15mm pitch mounting holes allow the 100AF to 630AF TemPlugs to be mounted in any position.

Standardized mounting pitch
Multiples of 15mm

Standardisation

The front panel cutout width is standardized to 92mm

＊Excludes high-performance electronic circuit breakers and smart circuit breakers.

The front panel and mounting surface height is standardized

Safety

- Switchboards where the busbar block (primary side) and equipment (secondary side) are separated can be configured.
- Optional items for circuit breaker can be used for the terminal covers and interpole barriers on the load side.

ASL : Arrangement Standard Line
HL : Handle Frame Centre Line
℄ : Handle Centre Line

T2PG05LS, T2PG12LS

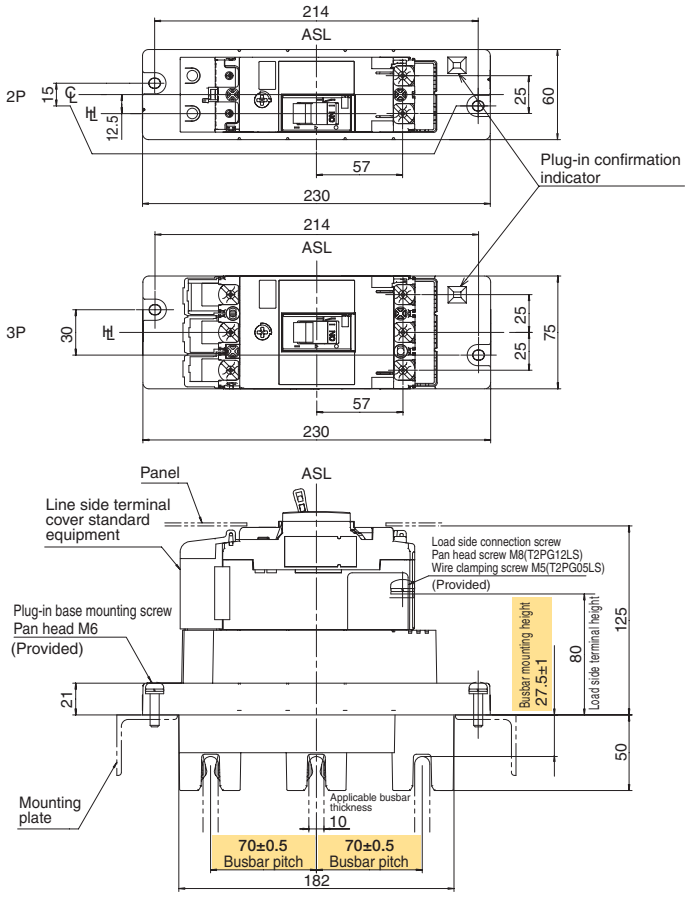

Applicable breakers

Type of *TemPlug*	MCCB	ELCB
T2PG05LS	S50-SF, S125-SF (15-50A), ZAS125-SF (15-50A)—3P only	ZS50-SF, ZS125-SF (15-50A), ZS100-SM (16-45A)] 3P only
T2PG12LS	S125-SF (60-125A), S125-SN, ZAS125-SF (60-125A)] 3P only	ZS125-SF (60-125A), ZS100-SM (60-100A)] 3P only

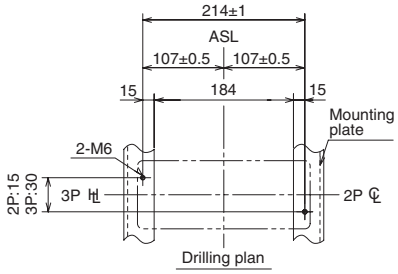

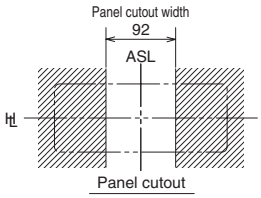

＊1 See the outline dimensions of the chapter 7 for the load side connection conductor preparation diagram.

＊2 The busbar pitch (70 ± 0.5) and busbar mounting height (27.5 ± 1) are important dimensions.

＊3 If needed please specify front-connected type with extension bar (optional) on the secondary side when ordering.

T2PG12S

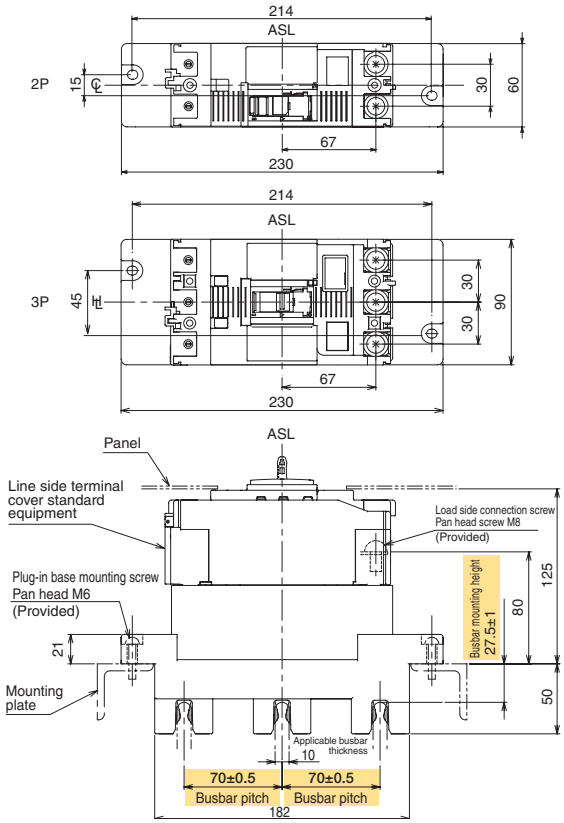

Applicable breakers

Type of *TemPlug*	MCCB	ELCB
T2PG12S	ZAS50-GF, ZAS100-GF, ZAS125-GF,] 3P only S100-GF, S125-GF	ZS100-GF, ZS125-GF] 3P only

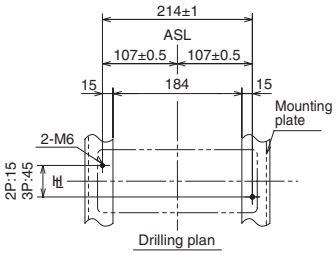

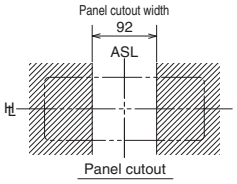

＊1 See the outline dimensions of the chapter 7 for the load side connection conductor preparation diagram.

＊2 The busbar pitch (70 ± 0.5) and busbar mounting height (27.5 ± 1) are important dimensions.

＊3 If needed please specify front-connected type with extension bar (optional) on the secondary side when ordering.

ASL : Arrangement Standard Line
⊢⊣ : Handle Frame Centre Line
℄ : Handle Centre Line

TPPG12S

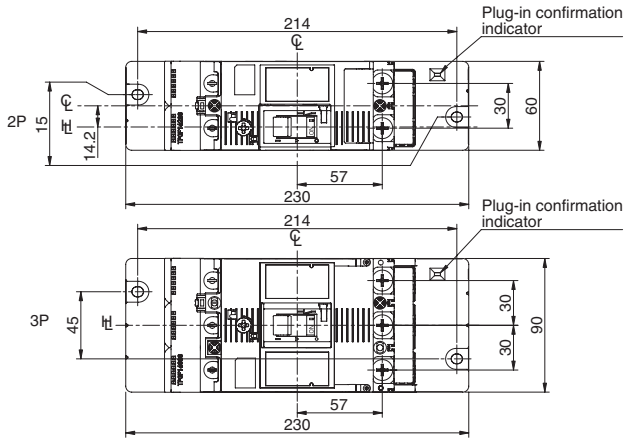

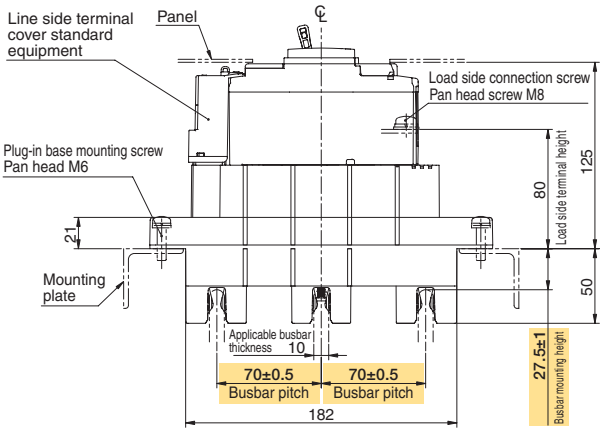

Applicable breakers

Type of *TemPlug*	MCCB
TPPG12S	PS125-NF, PS50-PF, PS125-PF, PS125-NE, PS125-PE, PS125-NN] 3P only

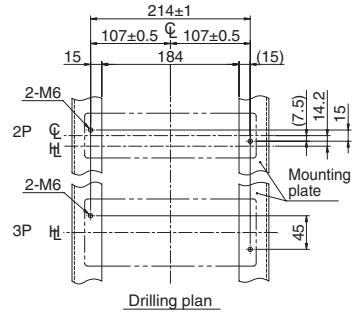

Drilling plan

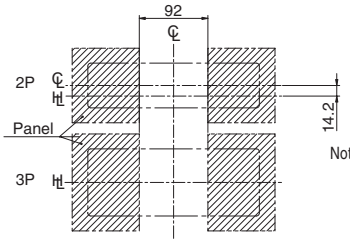

Panel cutout

Note:Smart circuit breakers have a different panel cutout and are not compatible with panel cutout width 92mm.

＊1 See the outline dimensions of the chapter 7 for the load side connection conductor preparation diagram.

＊2 The busbar pitch (70 ± 0.5) and busbar mounting height (27.5 ± 1) are important dimensions.

＊3 If needed please specify front-connected type with extension bar (optional) on the secondary side when ordering.

T2PG25LS

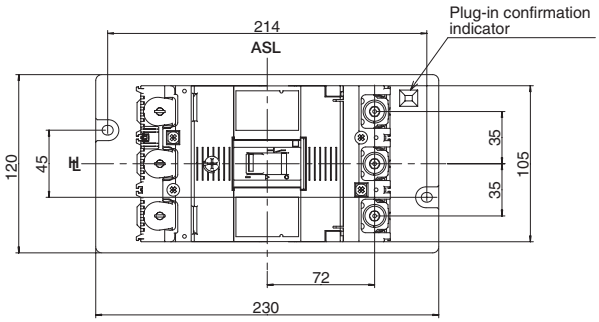

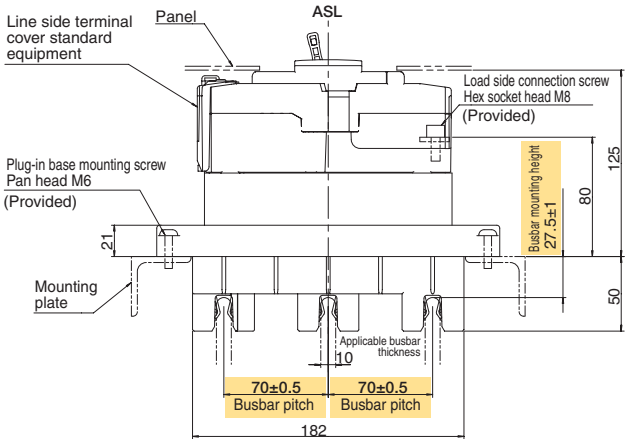

Applicable breakers

Type of *TemPlug*	MCCB	ELCB
T2PG25LS	E250-SF, S250-SF, S250-SM, S250-SN, ZAE250-SF, ZAS250-SF, PS250-PF, PS250-NE, PS250-PE, PS250-NN	ZE250-SF, ZS250-SF, ZS250-SM

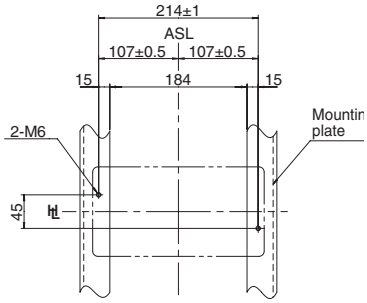

Drilling plan

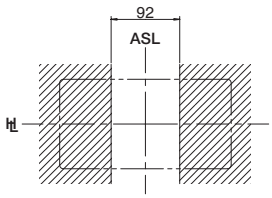

Panel cutout

Note:Smart circuit breakers have a different panel cutout and are not compatible with panel cutout width 92mm.

＊1 See the outline dimensions of the chapter 7 for the load side connection conductor preparation diagram.

＊2 The busbar pitch (70 ± 0.5) and busbar mounting height (27.5 ± 1) are important dimensions.

＊3 If needed please specify front-connected type with extension bar (optional) on the secondary side when ordering.

T2PG25S

ASL : Arrangement Standard Line
⊕ : Handle Frame Centre Line
℄ : Handle Centre Line

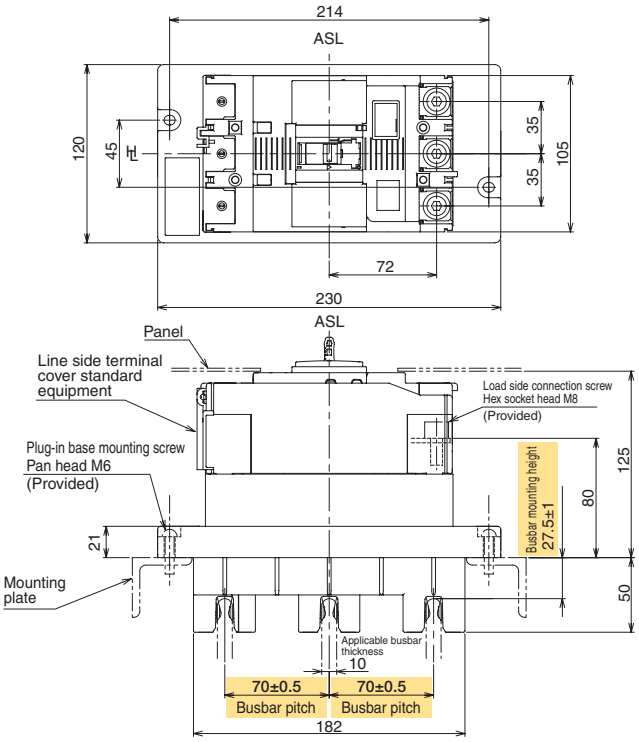

Applicable breakers

Type of *TemPlug*	MCCB	ELCB
T2PG25S	ZAS225-GF, ZAS250-GF	ZS225-GF, ZS250-GF

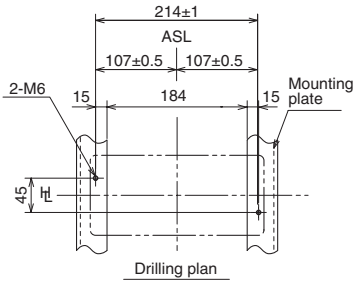

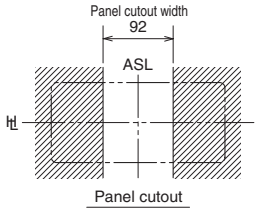

∗1 See the outline dimensions of the chapter 7 for the load side connection conductor preparation diagram.

∗2 The busbar pitch (70 ± 0.5) and busbar mounting height (27.5 ± 1) are important dimensions.

∗3 If needed please specify front-connected type with extension bar (optional) on the secondary side when ordering.

T2PG40S

ASL : Arrangement Standard Line
⊕ : Handle Frame Centre Line

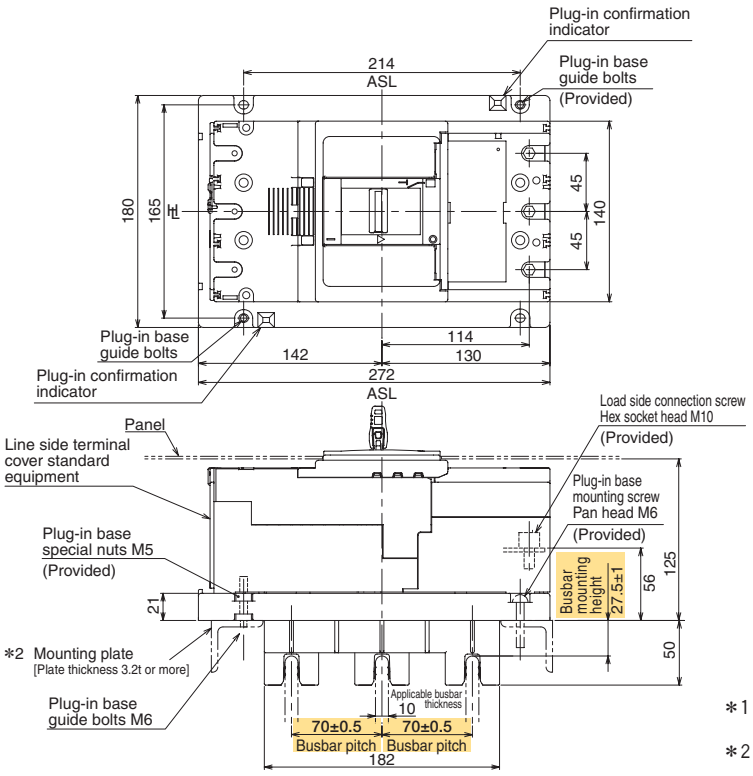

Applicable breakers

Type of *TemPlug*	MCCB	ELCB
T2PG40S	ZAE400-NF, ZAS400-NF, ZAS400-GF, E400-NF	ZE400-NF, ZS400-NF, ZS400-GF

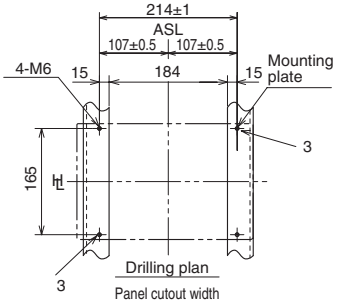

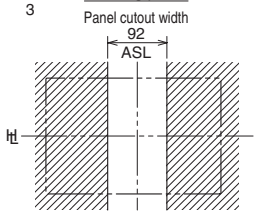

Note:High-Performance electronic circuit breakers have a different panel cutout and are not compatible with panel cutout width 92mm.

∗1 See the outline dimensions of the chapter 7 for the load side connection conductor preparation diagram.

∗2 When using a steel plate for the mounting angle, the thickness of the plate should be 3.2t or more.

∗3 Install the guide bolts in this position first and position them.

∗4 The busbar pitch (70 ± 0.5) and busbar mounting height (27.5 ± 1) are important dimensions.

∗5 If needed please specify front-connected type with extension bar (optional) on the secondary side when ordering.

ASL : Arrangement Standard Line
⊢⊣ : Handle Frame Centre Line
℄ : Handle Centre Line

TPPG40S

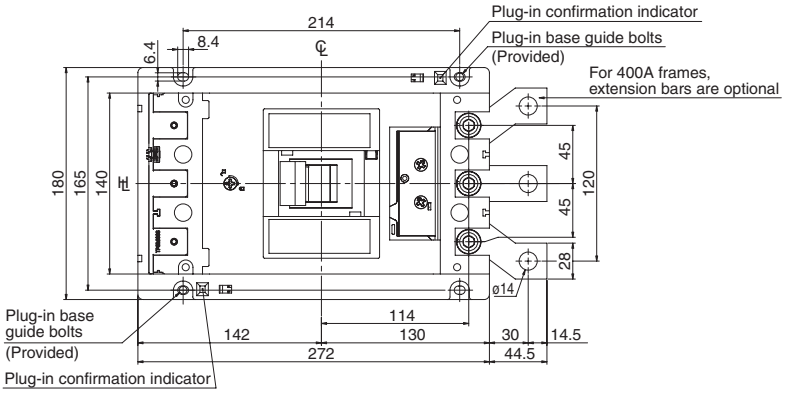

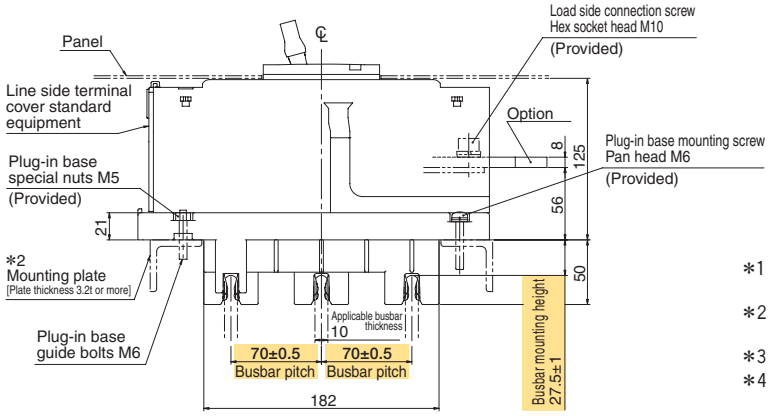

Applicable breakers

Type of *TemPlug*	MCCB
TPPG40S	PS400-CF, PS400-NF, PS400-GF, PS400-NE, PS400-GE, PH400-CF①, PH400-CE①, PS400-NN, PS630-CF 500A, PS630-NF 500A, PS630-GF 500A, PS630-NN 500A, PH630-CF 500A①

Note① : These are special types that can be used. However, due to the limitation of the short-time withstand current of the busbar, they cannot be applied to circuits with a short circuit breaking current exceeding 85kA.

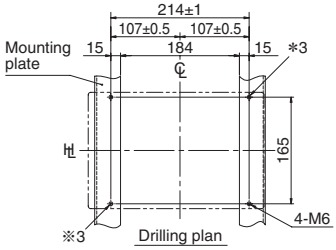

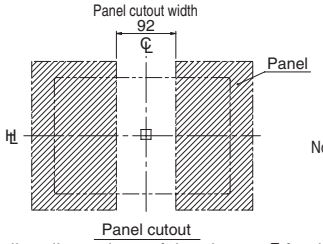

Note:Smart circuit breakers have a different panel cutout and are not compatible with panel cutout width 92mm.

*1 See the outline dimensions of the chapter 7 for the load side connection conductor preparation diagram.
*2 When using a steel plate for the mounting angle, the thickness of the plate should be 3.2t or more.
*3 Install the guide bolts in this position first and position them.
*4 The busbar pitch (70 ± 0.5) and busbar mounting height (27.5 ± 1) are important dimensions.
*5 For 400A frames, if needed please specify front-connected type with extension bar (optional) on the secondary side when ordering.

ASL : Arrangement Standard Line
⊢⊣ : Handle Frame Centre Line

T2PG63S

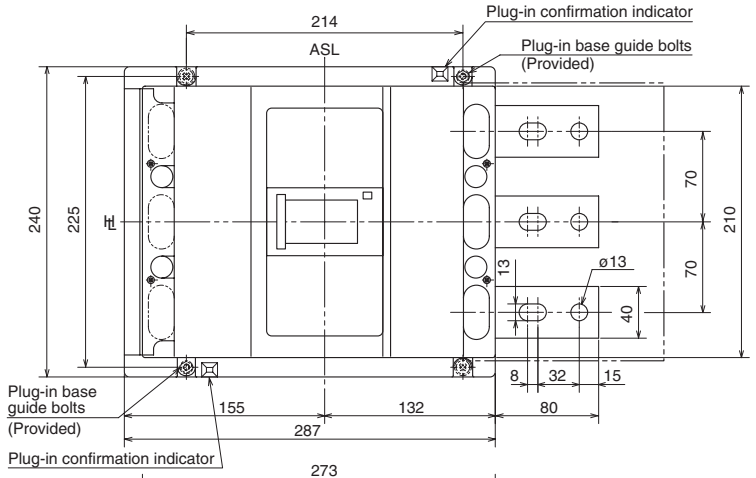

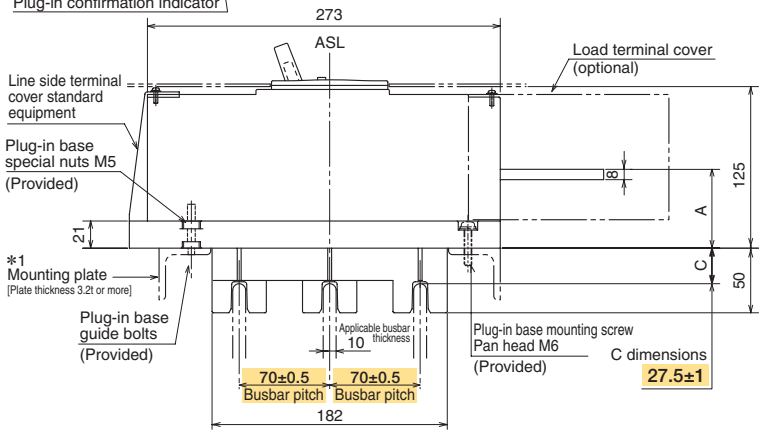

Applicable breakers

Type of *TemPlug*	MCCB	ELCB	A (mm)
T2PG63S	S630-CF, S630-NF, S630-GN		61
	S630-NE, ZAS630-CF, ZAS630-NF	ZS630-CF, ZS630-NF	63

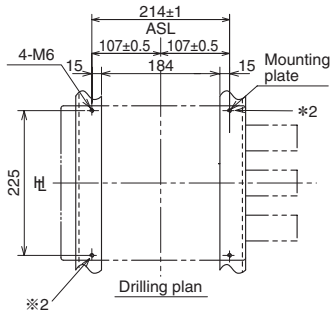

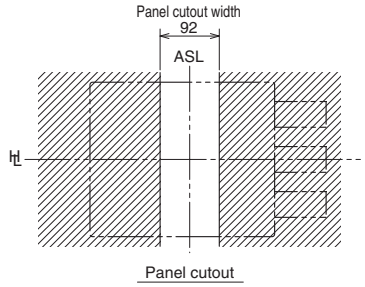

Note:High-Performance electronic circuit breakers have a different panel cutout and are not compatible with panel cutout width 92mm.

*1 When using a steel plate for the mounting angle, the thickness of the plate should be 3.2t or more.
*2 Install the guide bolts in this position first and position them.
*3 The busbar pitch (70 ± 0.5) and busbar mounting height (27.5 ± 1) are important dimensions.

100A to 630A Frame

Plug-in base type *1	poles	Applicable breakers					
		Moulded case circuit breakers	Non-automatic trip breakers/ Switch disconnectors (3P only)	Circuit breakers with earth leakage alarm (3P only)	Earth leakage circuit breakers (3P only)	Moulded case circuit breakers for motor protection (3P only)	Earth leakage circuit breakers for motor protection (3P only)
T2PG05LS	2 3	S50-SF, S125-SF (15-50A)		ZAS125-SF (15-50A)	ZS50-SF, ZS125-SF (15-50A)		ZS100-SM (16-45A)
T2PG12LS	2 3	S125-SF (60-125A)	S125-SN	ZAS125-SF (60-125A)	ZS125-SF (60-125A)		ZS100-SM (60-100A)
T2PG12S	2 3	S100-GF, S125-GF		ZAS50-GF, ZAS100-GF, ZAS125-GF	ZS100-GF, ZS125-GF		
TPPG12S	2	PS125-NF, PS50-PF, PS125-PF					
	3	PS125-NF, PS50-PF, PS125-PF, PS125-NE*2, PS125-PE*2	PS125-NN				
T2PG25H	3	H100-NF*3*4, H125-NF*3*4, H225-NF*3*4					
T2PG25LS	3	E250-SF, S250-SF, PS250-PF, PS250-NE*2, PS250-PE*2	S250-SN, PS250-NN	ZAE250-SF, ZAS250-SF	ZE250-SF, ZS250-SF	S250-SM	ZS250-SM
T2PG25S	3			ZAS225-GF, ZAS250-GF	ZS225-GF, ZS250-GF		
T2PG40S	3	E400-NF		ZAE400-NF, ZAS400-NF, ZAS400-GF	ZE400-NF, ZS400-NF, ZS400-GF		
TPPG40S	3	PS400-CF, PS400-NF, PS400-GF, PH400-CF*3, PS400-NE*2, PS400-GE*2, PH400-CE*2*3, PS630-CF 500A, PS630-NF 500A, PS630-GF 500A, PS630-NN 500A, PH630-CF 500A*3	PS400-NN, PS630-NN 500A				
T2PG63S	3	S630-CF, S630-NF, S630-NE*2	S630-GN	ZAS630-CF, ZAS630-NF	ZS630-CF, ZS630-NF		

Use full-round R5 or square R0.9 with a plate thickness of 10mm for the main busbar.
If used in a multi-stack, please consider the temperature of the busbar for a 30K rise under JIS C 4620.
*1 : The plug-in base is not supplied as a single item. Order together with the circuit breaker.
*2 : High-performance electronic circuit breakers and smart circuit breakers are not compatible with panel cutout width 92mm.
*3 : These are special types that can be used. However, due to the limitation of the short-time withstand current of the busbar, they cannot be applied to circuits with a short circuit breaking current exceeding 85kA.
*4 : Please contact us for the outline dimensions.

Blank cover for *TemPlug 70*

(Option)

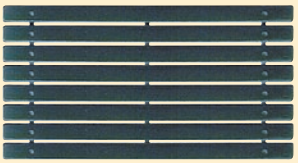

A cover that covers the gap between the *TemPlug* and separates them from the busbar block.
It can be easily divided in 15mm increments, so cut it to fit the gap.

Type XDI-BCOVER

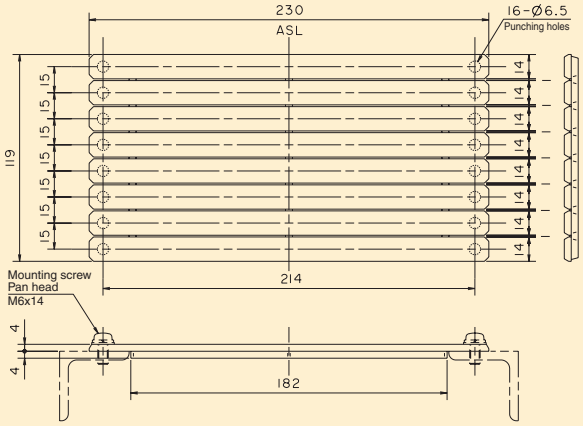

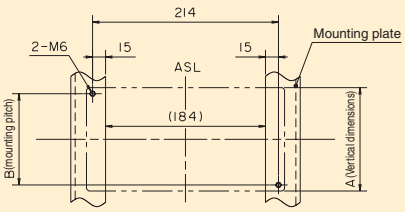

If folded into 1 in series	A=14.5	B=0
If folded into 2 in series	A=29.5	B=15
If folded into 3 in series	A=44.5	B=30
If folded into 4 in series	A=59.5	B=45
If folded into 5 in series	A=74.5	B=60
If folded into 6 in series	A=89.5	B=75
If folded into 7 in series	A=104.5	B=90
	A=119	B=105 for 8 in series

Busbar support for *TemPlug 70*

We recommend the use of a busbar support in order to achieve an accurate busbar pitch of 70mm.

Type BST 70

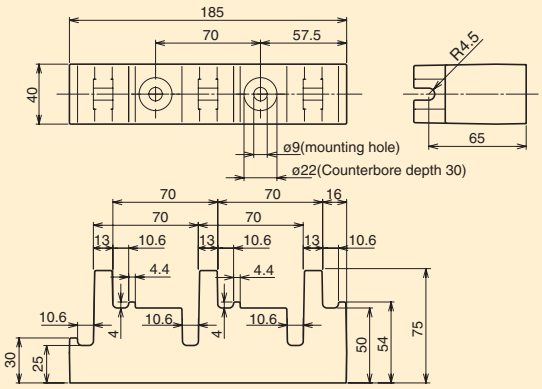

When using *TemPlug 70*

①The recommended values for the busbar support interval to interrupt short-circuit current with an MCCB are as shown in the table below.

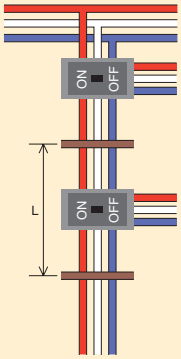

For rated breaking capacity 460V AC 50kA

Busbar size	Busbar support interval L (mm)		
	225A	400A	600/630A
10t×50w	585	405	345
10t×100w	735	525	450

For rated breaking capacity 220V AC 85kA

Busbar size	Busbar support interval L (mm)		
	225A	400A	600/630A
10t×50w	690	525	390
10t×100w	885	660	495

②In order to withstand a short-time current of 50kA for 1 second the distance between the busbar supports should be 300mm.

In order to withstand a short-time current of 85kA for 1 second the distance between the busbar supports should be 150mm.

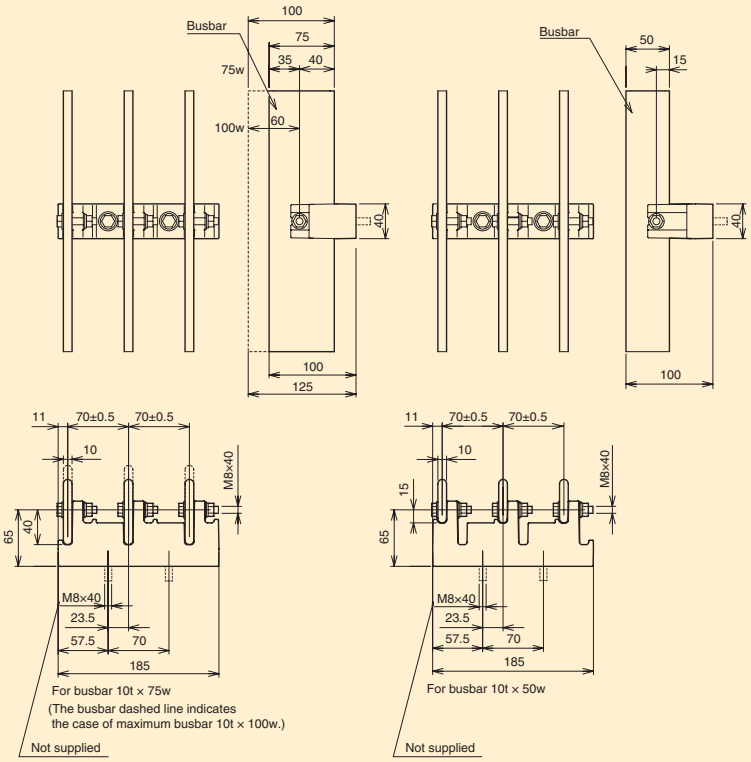

Note1. When using a busbar of 10t × 125w or more, use a bushing type support, too.
Note2. When using a 50w or 75w busbar, the relationship between the busbar and the busbar support mounting hole is the same, and the busbar support can be mounted inversely in the horizontal direction.
Note3. The busbar support should be secured to a strong L-shaped angle or similar.

TemPlug 70 confirmation jig

Type XDI-GAUGE

TemPlug 70 confirmation jig is a Go/No Go gauge that determines whether the plug-in base is properly inserted into the busbar.

(Not available for T2PG05LS 3P, T2PG12LS 3P, T2PG12S 2P/3P and TPPG12S 2P/3P.)

Busbar unit for *TemPlug 70*

We have prepared busbar units to standardize and shorten the production time for switchboards.
Every busbar unit is inspected before shipment for tolerances such as busbar pitch, busbar mounting height, and lateral dimensions of the busbar and plug-in base mounting screw holes, so you can be assured of product quality.

Slim type branch dedicated type

The branch circuit breaker can be installed on the line side or load side, either on the left or right.

Type	Rated current	Busbar width (mm)	E (mm)	F (mm)	L (mm)	P (mm)	D (mm)	Short-time current
BW 9-B-50S	900A	50 Fig.①	52	—	1500	680	200	50kA 1sec
BW12-B-50S	1200A	75 Fig.①	64.5	—				
BW15-B-50S	1500A	100 Fig.②	52	50				
BW 9-B17-50S	900A	50 Fig.①	52	—	1700	780	200	50kA 1sec
BW12-B17-50S	1200A	75 Fig.①	64.5	—				
BW15-B17-50S	1500A	100 Fig.②	52	50				
BW 9-B-85S	900A	50 Fig.①	52	—	1500	680	200	85kA 1sec
BW12-B-85S	1200A	75 Fig.①	64.5	—				
BW15-B-85S	1500A	100 Fig.②	52	50				
BW21-B-85S	2100A	150 Fig.③	52	50			250	
BW 9-B17-85S	900A	50 Fig.①	52	—	1700	780	200	85kA 1sec
BW12-B17-85S	1200A	75 Fig.①	64.5	—				
BW15-B17-85S	1500A	100 Fig.②	52	50				
BW21-B17-85S	2100A	150 Fig.③	52	50			250	

The outline drawing shows the case of a rated current of 900A and short-time current of 50kA 1sec.

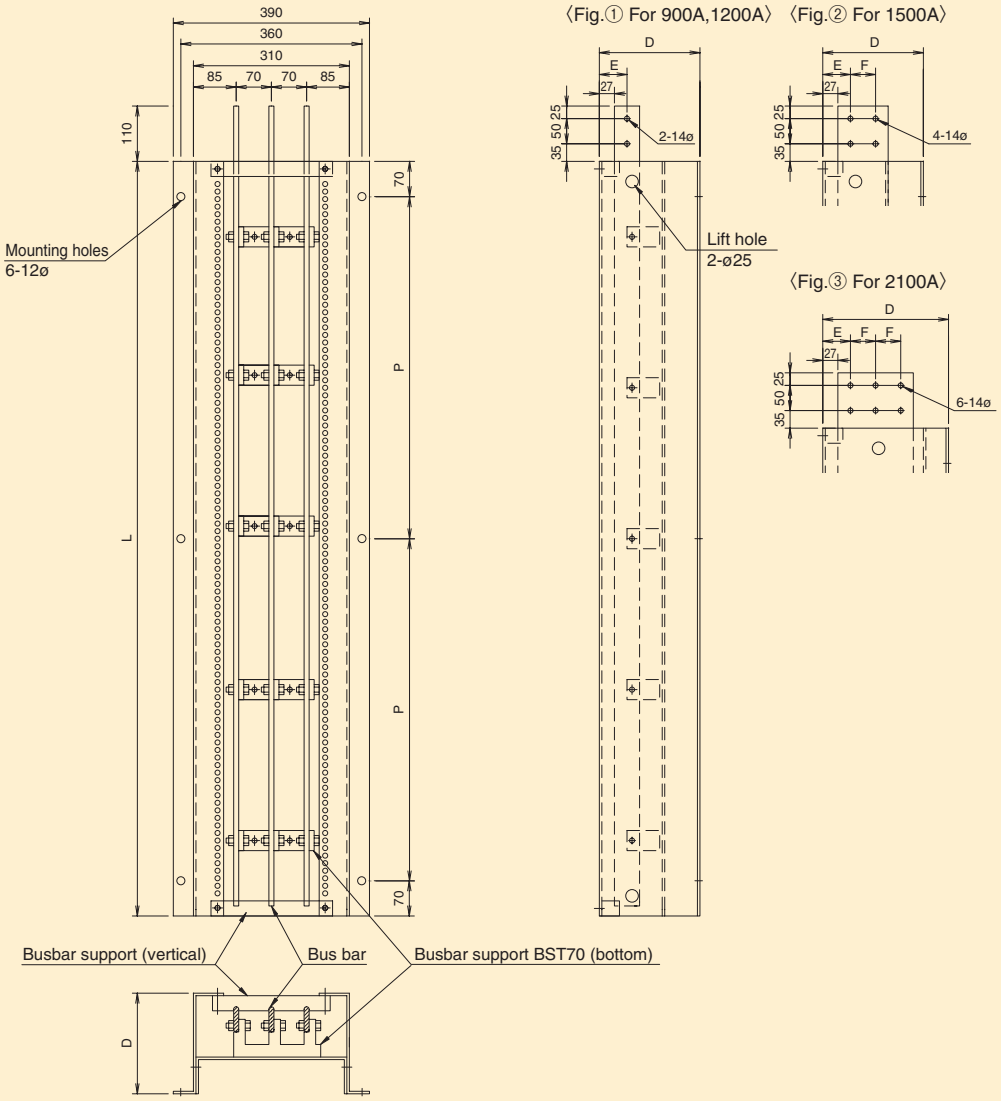

100A to 630A Frame

Circuit breaker mounting drawing

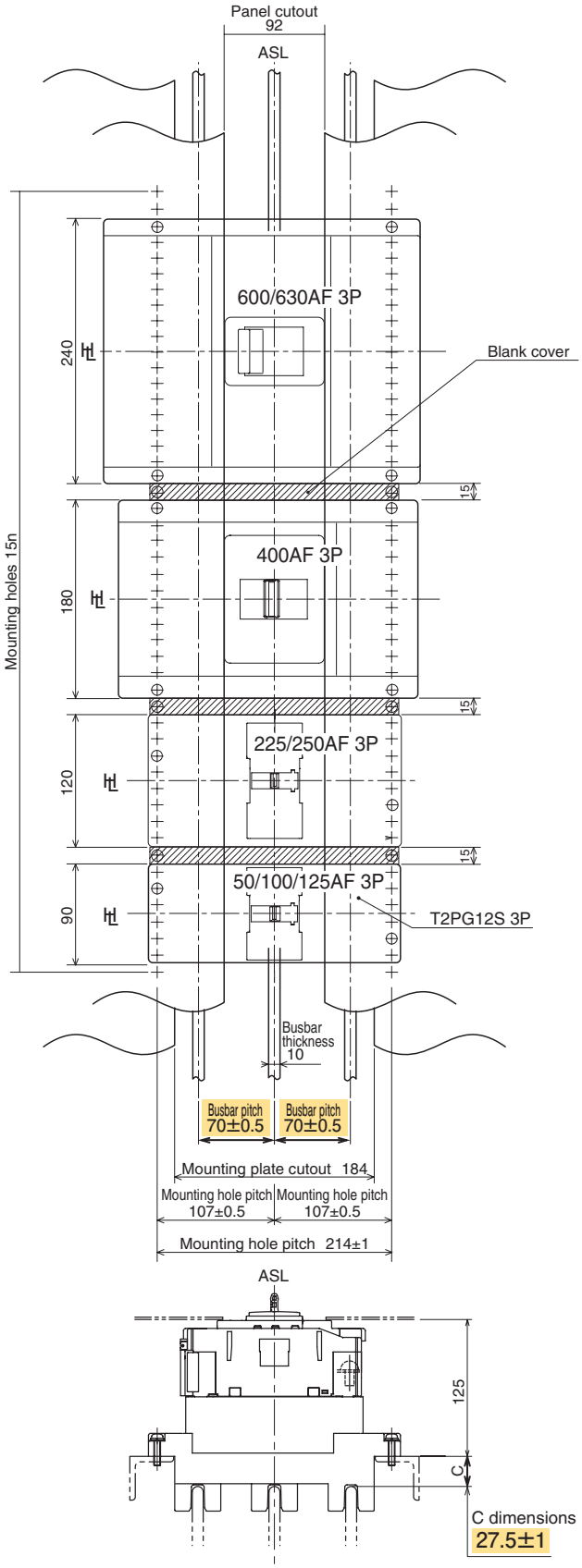

* The busbar pitch (70±0.5) and busbar mounting height (27.5±1) are important dimensions.

Circuit breaker centre-to-centre pitch

■ For close fitting mounting

(Close fitting is possible in the case of lead wire draw-in. However, circuit breakers with earth leakage alarm except for ZAE250-SF and ZAS250-SF cannot be close fitted.)

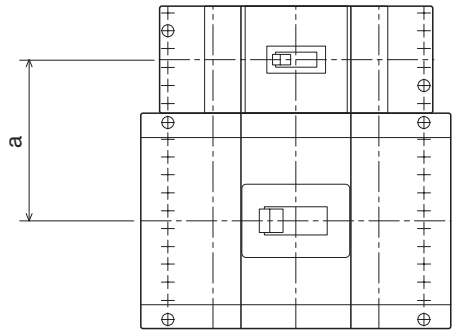

a dimensions

Circuit breaker frame size		50/100/125AF 2P	50/100/125AF 3P	50/100/125AF 3P	225/250AF 3P	400AF 3P	600/630AF 3P
	TemPlug Type	T2PG05LS 2P T2PG12LS 2P T2PG12S 2P TPPG12S 2P	T2PG05LS 3P T2PG12LS 3P	T2PG12S 3P TPPG12S 3P	T2PG25LS 3P T2PG25S 3P	T2PG40S 3P TPPG40S 3P	T2PG63S 3P
50/100/125AF 2P	T2PG05LS 2P T2PG12LS 2P T2PG12S 2P TPPG12S 2P	60	67.5	75	90	120	150
50/100/125AF 3P	T2PG05LS 3P T2PG12LS 3P	67.5	75	82.5	97.5	127.5	157.5
50/100/125AF 3P	T2PG12S 3P TPPG12S 3P	75	82.5	90	105	135	165
225/250AF 3P	T2PG25LS 3P T2PG25S 3P	90	97.5	105	120	150	180
400AF 3P	T2PG40S 3P TPPG40S 3P	120	127.5	135	150	180	210
600/630AF 3P	T2PG63S 3P	150	157.5	165	180	210	240

■ When mounting a blank cover

(If the circuit breaker has a lead wire terminal block, use about one to three blank covers. (See the figure on the left))

a dimensions

Circuit breaker frame size		50/100/125AF 2P	50/100/125AF 3P	50/100/125AF 3P	225/250AF 3P	400AF 3P	600/630AF 3P
	TemPlug type	T2PG05LS 2P T2PG12LS 2P T2PG12S 2P TPPG12S 2P	T2PG05LS 3P T2PG12LS 3P	T2PG12S 3P TPPG12S 3P	T2PG25LS 3P T2PG25S 3P	T2PG40S 3P TPPG40S 3P	T2PG63S 3P
50/100/125AF 2P	T2PG05LS 2P T2PG12LS 2P T2PG12S 2P TPPG12S 2P	75	82.5	90	105	135	165
50/100/125AF 3P	T2PG05LS 3P T2PG12LS 3P	82.5	90	97.5	112.5	142.5	172.5
50/100/125AF 3P	T2PG12S 3P TPPG12S 3P	90	97.5	105	120	150	180
225/250AF 3P	T2PG25LS 3P T2PG25S 3P	105	112.5	120	135	165	195
400AF 3P	T2PG40S 3P TPPG40S 3P	135	142.5	150	165	195	225
600/630AF 3P	T2PG63S 3P	165	172.5	180	195	225	255

Order Form

When ordering a *TemPlug*, please specify the "breaker type", "number of poles", "*TemPlug* series abbreviation" and "connection type" (for 2 poles). It is not necessary to fill in the individual type of *TemPlug* (plug-in base type) because we do not supply plug-in bases as a single item.
We will deliver it as a set with the circuit breaker.

	TemPlug series abbreviation
TemPlug70	PG

When the number of poles is 2P, the following three types of plug-in base are available, depending on the phase to be connected.
Please specify which connection type.

Connection type	For ON (line side) left mounting	For ON (line side) right mounting
A	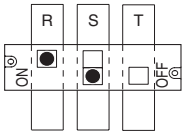 R-S(N) phase connection	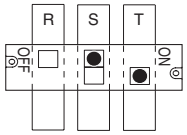 T-S(N) phase connection
B	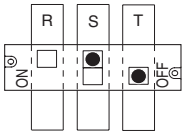 T-S(N) phase connection	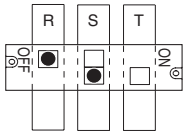 R-S(N) phase connection
C	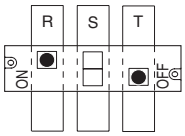 R-T phase connection	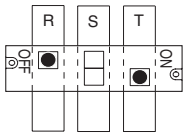 R-T phase connection

Order code

EX. 1
「PS125-NF」+「2P」+「PG」+「A」

EX. 2
「PS250-PF」+「3P」+「PG」

Flexibility to change specifications

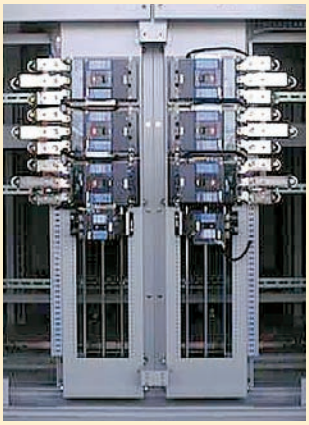

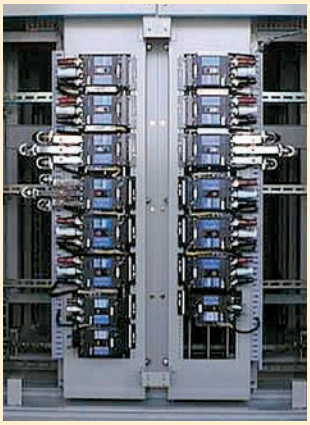

The system can easily accommodate changes to the circuit breakers or additions due to changes in load capacity, as well as changes in the use of the circuit breaker.
Note: We recommend turning off the power when replacing circuit breakers for safety. However, in emergencies or when it is impossible to turn off the power, it is possible to replace a circuit breaker when energised, provided that the breaker is turned off and the work is carried out with due consideration for safety.

Miniaturisation of the switchboard

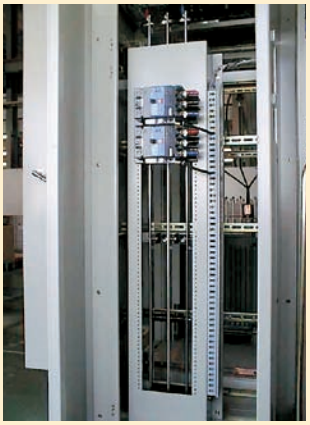

TemPlug plugs directly into the main busbar, so no space is needed for the branching busbar. This makes it possible to reduce the width of the switchboard.

Standardisation of phase order

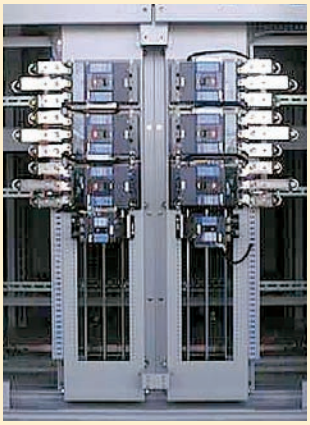

Regardless of the mounting orientation of the circuit breaker, the phase order of the load side can be standardized to R, S, T from the top.

TemPlug uses the contact part used in the motor control centre (MCC). Terasaki has developed this technology over many years in our marine switchboards.

- Short circuit test
- Short-time withstand current test
- Vibration test
- Insertion test
- Multi-step temperature test (photo on the right)

We conduct a variety of tests, such as:

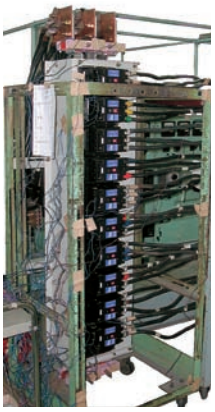

Status of multi-step temperature test

TemCurve Lite

- for windows 7/8/8.1/10 -

TemCurve Lite

can carry out the selectivity studies for Terasaki low-voltage air circuit breakers and moulded case circuit breakers very simply and quickly.

Comprehensive device database

Included in the software are high-voltage and low-voltage fuses, Terasaki air circuit breakers, Terasaki moulded case circuit breakers, Terasaki miniature breakers for distribution boards and overcurrent relays, etc. Moreover, it is possible to input thermal resistant characteristics of generators if needed, and to have a look at generator protections coordination.

Time-current curves can be adjusted easily

The time-current curves can be adjusted by choosing different pick-up currents and the operating times. The time-current curves can also be easily adjusted by using the curve drag feature.

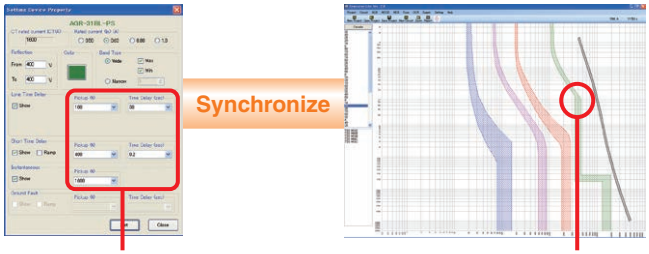

Select the value from pull down menu

Drag the characteristic curve with the mouse

Simple coordination with high-voltage devices

It is possible to coordinate between high-voltage and low-voltage devices by inputting the voltage of the high-voltage side.

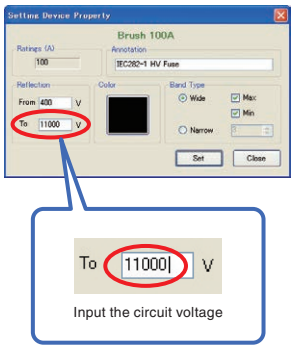

Input the circuit voltage

Output the coordination characteristics curves into CAD

The time-current curves drawn can be output in a DXF format file, and can be used in CAD software. Moreover, you can adjust the scale of the graph for the curves on a horizontal axis (current) and a vertical axis (time). PDF format file also can be output.

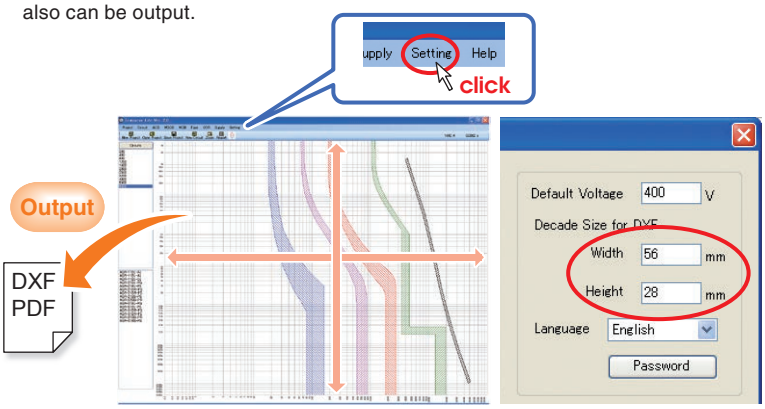

Output single line diagram with the setting values of the devices

Once the time-current curves are drawn, a single line diagram can be printed with individual device settings.

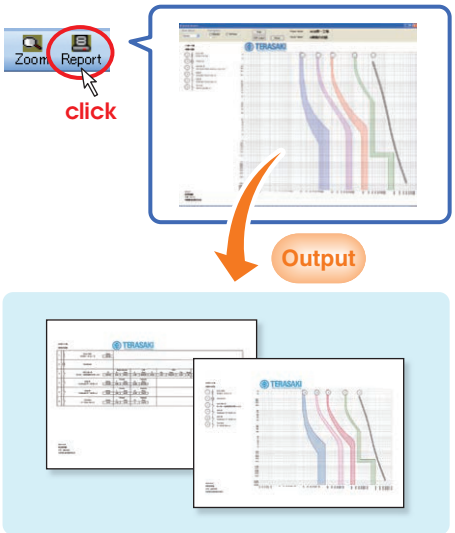

TemCurve Lite is the free software for windows 7 / 8 / 8.1/10.
Contact us for details.

【Contact】 E-mail: temcurve@terasaki.co.jp

TERASAKI ELECTRIC (EUROPE) LTD.
FILIAL SVERIGE
(Sweden)

TERASAKI ELECTRIC (EUROPE) LTD.
(United Kingdom)

TERASAKI ELECTRIC (EUROPE) LTD.
SUCURSAL EN ESPAÑA
(Spain)

TERASAKI ELECTRIC (EUROPE) LTD.
FILIALE ITALIA
(Italy)

TERASAKI Global Network

TERASAKI ELECTRIC CO., LTD.
(Head Quarters, Japan)

TERASAKI ELECTRIC
(M) SDN. BHD.
(Malaysia)

TERASAKI CIRCUIT
BREAKERS (S) PTE. LTD.
TERASAKI ELECTRIC CO.,
(FAR EAST) PTE. LTD.
(Singapore)

TERASAKI DO BRASIL LTDA.
(Brazil)

TERASAKI ELECTRIC
(SHANGHAI) CO., LTD.
(China)

TERASAKI ELECTRIC
(CHINA) LTD.
(China)

Since 1971 when we established TERASAKI ELECTRIC Europe, our first overseas subsidiary, in the UK, we have assembled a global network of 10 overseas subsidiaries and 72 agents to provide sales and technical supports to customers worldwide.

⚠ Safety Notice

Carefully read instruction manual to ensure proper installation, connection, operation, handling and maintenance of the product.

TERASAKI ELECTRIC CO., LTD.

Head Office: 6-13-47 Kamihigashi, Hirano-ku, Osaka 547-0002, Japan
Circuit Breaker Division: 6-13-47 Kamihigashi, Hirano-ku, Osaka 547-0002, Japan
TEL +81-6-6791-2763
FAX +81-6-6791-2732
int-sales@terasaki.co.jp
https://www.terasaki.co.jp/

OCT. 2023 Catalogue No. '23-I68E

Ratings and specifications are subject to change without notice.